Innovation in Motion
TSUBAKI

TSUBAKI
COUPLINGS

ECHT-FLEX® COUPLING ROLLER CHAIN COUPLING NYLON CHAIN COUPLING
JAW-FLEX COUPLING POWER RIGID COUPLING

Tsubaki couplings provide

Disk Couplings

High stiffness | Backlash-free | Lubrication-free

NER Series
ECHT-FLEX® Couplings

NEF Series/NEH Series
ECHT-FLEX® Couplings

TSUBAKI

NES Series
ECHT-FLEX® Couplings

Power Rigid Couplings

dependable reliability.

Outstanding vibration absorption

Large misalignment absorption

Elastomer Couplings

Jaw-Flex Couplings

SOLUTION

Roller Chain Couplings

Nylon Chain Couplings

Stainless Steel Roller Chain Couplings

Easy assembly/disassembly

Original Tsubaki large-size models

Chain Couplings

Tsubaki can provide the optimum

Flagship Type

For various applications

NER Series ECHT-FLEX® Couplings

Center unit structure for easy mounting

- Large power transmission capacity
- Large bore diameters
- Wide range of options
- Easy handling
- Backlash-free, long service life

NEF Series ECHT-FLEX® Couplings

Wide variation

- Backlash-free
- Lubrication-free
- Long service life

NEH Series ECHT-FLEX® Couplings

Largest capacity

- Lubrication-free
- Long service life
- G type/U type option

Environmentally Resistant Types

NER Series ECHT-FLEX Couplings CFRP spacer type

Lightweight, highly corrosion resistant

- Lighter than stainless steel type
- For cooling towers
- Easy mounting, outstanding handling ease

NEF Series ECHT-FLEX Couplings Stainless steel type

High corrosion resistance, ideal for clean room use

- 100% stainless steel
- Same transmitted torque as standard models
- No wear

Roller Chain Couplings Stainless steel type

In harsh environments

- Outstanding corrosion resistance
- High heat resistance
- Food grade grease by option

coupling for the application.

General-Purpose Types

For general applications

Roller Chain Couplings

Wide variation

- Easy mounting
- JIS-compliant
- Outstanding durability

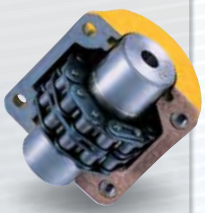

Nylon Chain Couplings

Choice of chain material and sprocket

- Lubrication-free
- Easy mounting
- Compact/lightweight

L Series Jaw-Flex Couplings

Three types of inserts

- Ideal for direct motor coupling
- Aluminum hub models and plated models
- Economical type

High-Precision Types

For servomotor applications

NEF Series ECHT-FLEX® Couplings

Taper-Lock coupling

High-precision type

- Large shaft coupling force
- Wide bore range
- Easy mounting

NEF Series ECHT-FLEX® Couplings

Clamp coupling

Single-bolt clamping

- Compact
- Simple structure
- Economical type

LN Series Jaw-Flex Couplings

Outstanding vibration damping

- Suit to servo drive
- Choice of two spider types
- Easy mounting

NES Series ECHT-FLEX® Couplings

Low moment of inertia, high torsional stiffness

- Wide bore range
- Backlash-free
- Clamp-coupled, for easy mounting

Power Rigid Couplings

Extremely high torsional stiffness

- Easy mounting
- Economical type
- Backlash-free

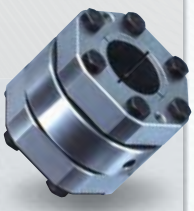

TT-net Automatic drawing service for coupling bore machining diagrams (PDF, 2D-CAD, 3D-CAD)

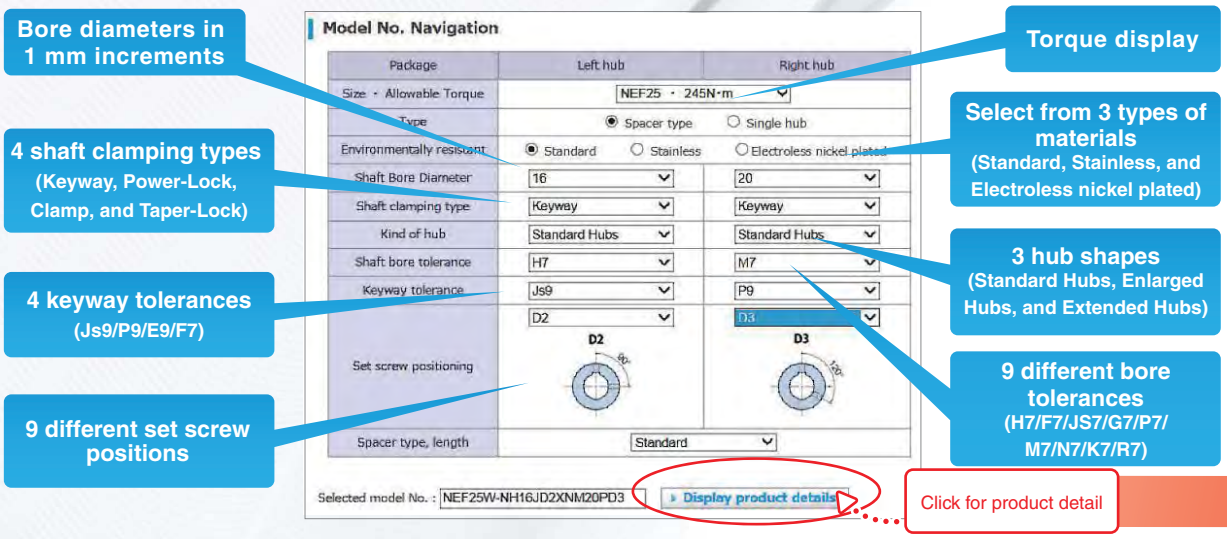

Standard bore size

NEF and NER Series ECHT-FLEX® Couplings

Model No.	Machined keyway bore products [mm]		
	Standard hub: NH□□JD2	Extended hub: LH□□JD2	Enlarged hub: KH□□JD2
NEF02	12,14,15,16,19,20	–	25
NEF04	10,11,12,14,15,16,17,18,19,20,22	–	24,25,28
NEF10	12,14,15,16,17,18,19,20,22,24,25,28,30,32	15,19,24,25	35
NEF18	14,15,16,17,18,19,20,22,24,25,28,30,32,35	25,32	38
NEF25	17,18,19,20,22,24,25,28,30,32,35,38,40,42	35,38	45,48
NEF45	25,28,30,32,35,38,40,42,45,48,50	40	–
NEF80	30,32,35,38,40,42,45,48,50,55,60	40	–
NEF130	35,38,40,42,45,48,50,55,60,65,70	–	–

Model No.	Keyway bore machining range [mm]	
	N: Standard hub L: Extended hub	K: Enlarged hub
NEF02	φ9 to φ20	φ21 to φ25
NEF04	φ9 to φ23	φ24 to φ29
NEF10	φ11 to φ32	φ33 to φ40
NEF18	φ14 to φ35	φ36 to φ42
NEF25	φ16 to φ42	φ43 to φ48
NEF45	φ16 to φ50	φ51 to φ60
NEF80	φ17 to φ60	φ61 to φ70
NEF130	φ28 to φ74	φ75 to φ80
NEF210	φ28 to φ83	φ84 to φ90

* Electroless nickel-plated type Fit Bore® couplings are supported up to standard hub NEF45. The model number is NEF○○SM or NEF○○WM.
* Enlarged hubs support only D0, D1, D2, D5, D6, and D8.

Model No.	Keyway bore machining range [mm]	
	N: Standard hub L: Extended hub	K: Enlarged hub
NEF340	φ46 to φ95	φ96 to φ110
NEF540	φ52 to φ109	φ110 to φ120
NEF700	φ52 to φ118	φ119 to φ130

Model No.	Keyway bore machining range [mm]	
	A : Adapter hub	
	New JIS (Js9, P9)	Old JIS (E9, F7)
NER59W	φ25 to φ65	φ25 to φ61
NER93W	φ40 to φ85	φ40 to φ80
NER230W	φ50 to φ90	φ50 to φ84
NER360W	φ60 to φ105	φ60 to φ99
NER630W	φ80 to φ125	φ80 to φ119
NER850W	φ100 to φ145	φ100 to φ139

Drawings can be easily downloaded from our custom-bore coupling lineup featuring more than one million combinations of modifications available for quick delivery.

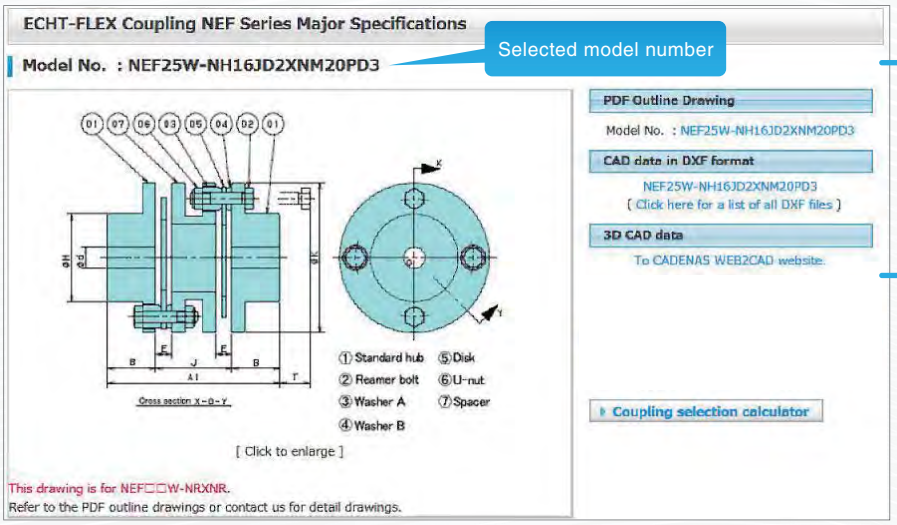

Roller Chain Couplings

Model No.	Machined keyway bore products [mm]		
	Standard hub: NH□□JD2	Standard hub: NH□□JD3	Standard hub: NH□□JD6
CR3812	–	–	14,15,16
CR4012	14,15,16,17,18,19	–	20,22
CR4014	14,15,16,17,18,19,20,22	–	24,25,28
CR4016	16,17,18,19,20,22,24,25,28	–	30,32
CR5014	16,17,18,19,20,22, 24,25,28,30	–	32,35
CR5016	18,19,20,22,24,25, 28,30,32	–	35,38,40
CR5018	18,19,20,22,24,25, 28,30,32,35,38,40	42	45
CR6018	22,24,25,28,30,32,35,38,40	42,45,48,50,55	–
CR6022	28,30,32,35,38,40	42,45,48,50,55,60,65	–
CR8018	32,35,38,40	42,45,48,50,55,60,65	–
CR8022	40	42,45,48,50,55,60,65	–

Model No.	Keyway bore machining range [mm]	
	Other than listed at right	Set screw position D0,D6,D7,D8
CR3812	φ11 to φ13	φ11 to φ16
CR4012	φ11 to φ19	φ11 to φ22
CR4014	φ11 to φ23	φ11 to φ28
CR4016	φ16 to φ29	φ16 to φ32
CR5014	φ16 to φ31	φ16 to φ35
CR5016	φ18 to φ34	φ18 to φ40
CR5018	φ18 to φ44	φ18 to φ45
CR6018	φ22 to φ56	
CR6022	φ28 to φ71	
CR8018	φ32 to φ80	
CR8022	φ40 to φ97	φ40 to φ100
CR10022	φ45 to φ110	
CR12018	φ50 to φ110	φ50 to φ125
CR12022	φ56 to φ140	
CR16018	φ63 to φ159	φ63 to φ160
CR16022	φ80 to φ200	
CR20018	φ88 to φ205	
CR20022	φ98 to φ260	

APPLICATIONS Tsubaki can satisfy

High-Performance Types

Stage equipment

NER Series/NEF Series
ECHT-FLEX Couplings

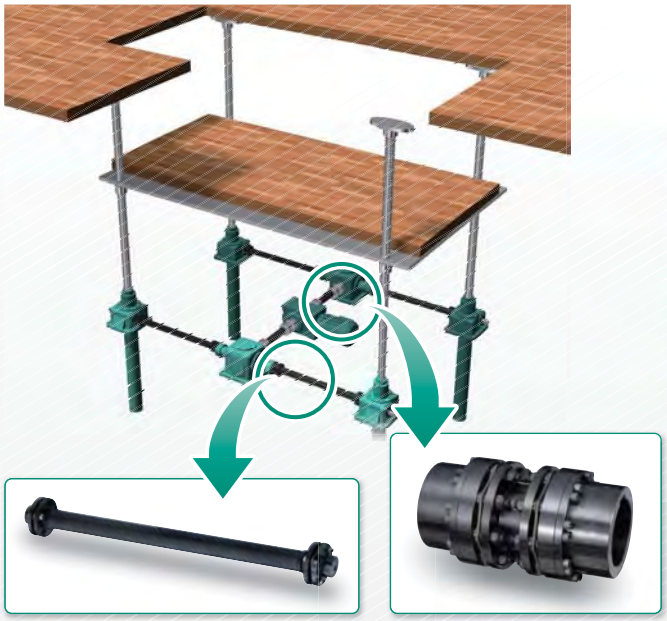

Elevator-type parking systems

NER Series/NEF Series/NEH Series
ECHT-FLEX Couplings

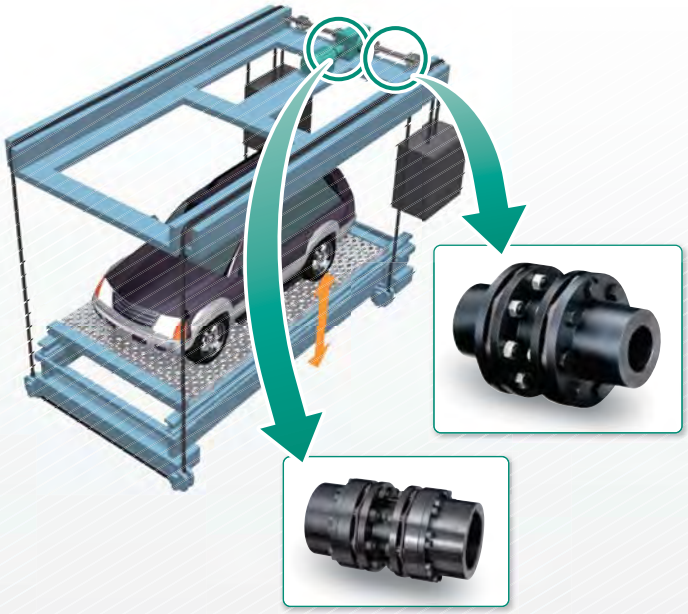

High-Precision Types

NC lathe X- and Z-axes

Taper-Lock Type NEF Series ECHT-FLEX Couplings
Clamp Type NEF Series ECHT-FLEX Couplings
EPR Series Power Rigid Couplings
LN Series Jaw-Flex Couplings

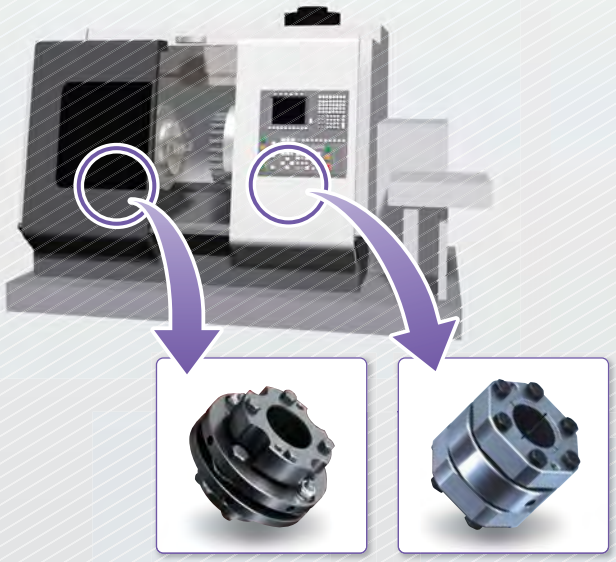

Machining center spindles

LN Series Jaw-Flex Couplings
NES Series ECHT-FLEX Couplings

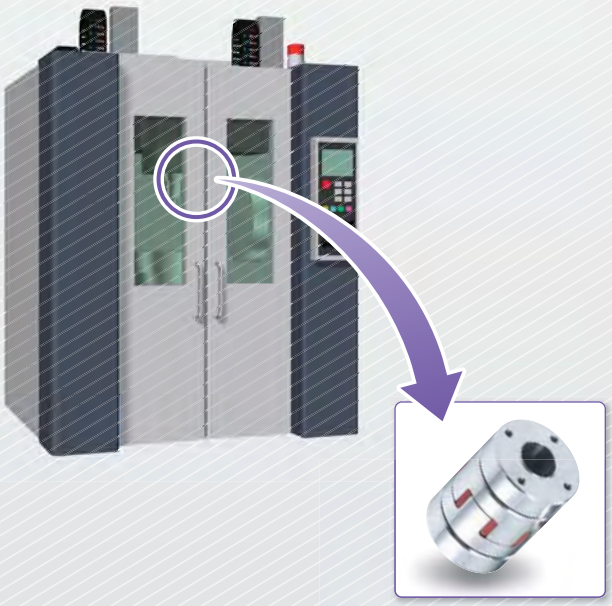

a wide range of user needs.

Small-Sized Precision Types

Industrial color printers

NES Series
ECHT-FLEX Couplings

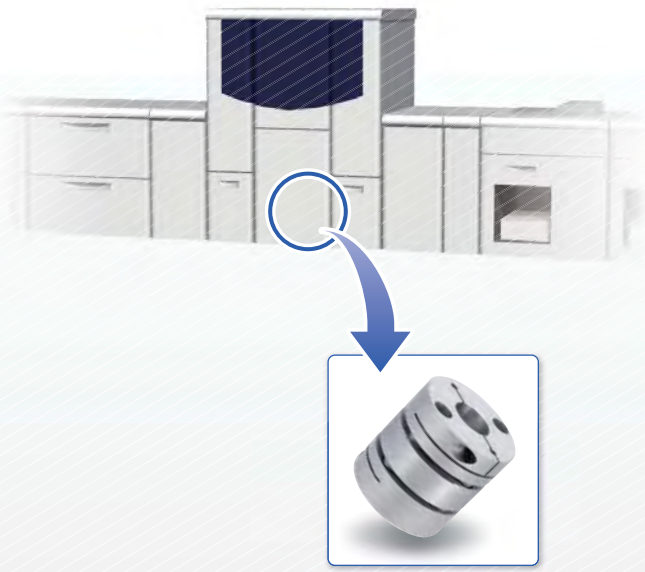

Single-axis robots

NES Series
ECHT-FLEX Couplings

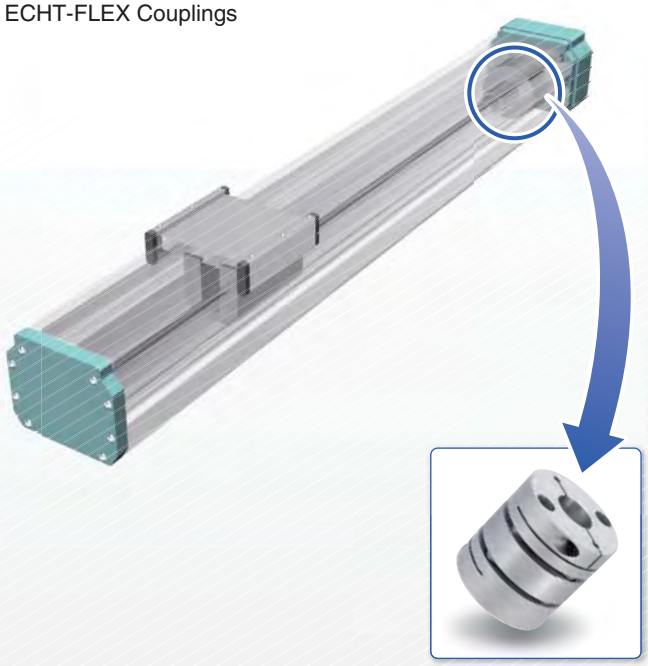

Environmentally Resistant Types

Water gates

Stainless steel NEF Series ECHT-FLEX Couplings
Stainless steel Roller Chain Couplings

Sputtering equipment

Stainless steel NEF Series ECHT-FLEX Couplings
Electroless nickel-plated NEF Series ECHT-FLEX Couplings

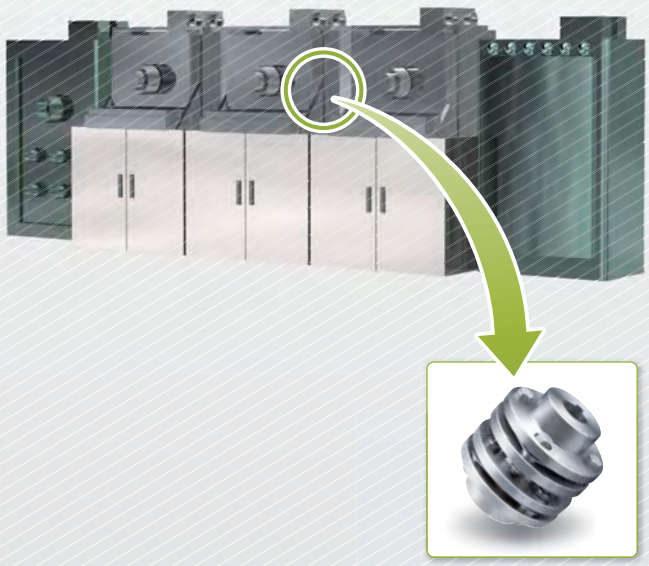

SELECTION GUIDE

		Disk Couplings				Rigid
Product (Series)		ECHT-FLEX Couplings (NER)	ECHT-FLEX Couplings (NEF)	ECHT-FLEX Couplings (NEH)	ECHT-FLEX Couplings (NES)	Power Rigid Couplings (EPR)
Page		Page 12 to 24	Page 25 to 63		Page 64 to 73	Page 74 to 79
Features		High torque Compact Easy mounting	Lubrication-free High precision	Lubrication-free High precision	High torsional stiffness Low moment of inertia	High rigidity Low moment of inertia
Torque range N·m		590 to 8500	19.6 to 6860	8820 to 176400	0.7 to 300	78 to 489
Bore diameter range mm		25 to 145	10 to 118	72 to 289	4 to 50	16 to 35
Characteristics	Backlash-free	●	●	●	●	●
	High torsional stiffness	●	●	●	●	●
	Low moment of inertia				●	●
	No lubrication required	●	●	●	●	●
	Flexibility	●	●	●	●	
	Easy mounting	●			●	●
	Vibration absorption					
Shaft coupling method Stock products with machined bores	Taper-Lock		●			●
	Power-Lock		●			
	Clamp		●		●	
	Cotter pins					
	Set screws					
	Keyway	●	●			
Typical applications		Pumps, Presses Vehicle testers	Fans, Pumps Transportation equipment Servomotor connection	Fans, Pumps Conveyors	Semiconductor manufacturing equipment Servomotor connection	Machine tools Servomotor connection

● ...Extremely good ▲ ...Superior ● ...Standard product

	Elastomer Couplings			Chain Couplings		
	LN Series Jaw-Flex Couplings (LN)	Jaw-Flex Couplings Sintered Hub (L)	Jaw-Flex Couplings Alminum Hub (L-A)	Roller Chain Couplings (CR)	Stainless Steel Roller Chain Couplings (CR-SS)	Nylon Chain Couplings (CN)
	Page 80 to 84	Page 85 to 93		Page 94 to 105	Page 106 to 109	Page 110 to 117
	Outstanding vibration damping	Simple Economical	Lightweight Economical	Wide variety of models Large capacity supported	Corrosion resistant Heat resistant	Lubrication-free Easy mounting
	60 to 405	0.4 to 711	2.9 to 110	99.9 to 717000	74 to 821	6.9 to 255
	12 to 45	5 to 69	10 to 48	10 to 700	11 to 71	10 to 55
	▲					
				●		
	●	●	●			●
		●	●			●
	●	●	●	●	●	●
	●	●	●	●	●	●
	●	●	●			▲
	●					
	●					
		●	●			
		●	●	●	●	
	Machine tools Servomotor connection	Pumps Induction motor connection	Pumps Induction motor connection	Common industrial induction motor connection	Food processing machinery Water gates	Food packagers Induction motor connection

Online resources

A website for general technical information on Tsubaki's power transmission equipment

TT-net TSUBAKI TECHNICAL net

▶▶▶ https://tt-net.tsubakimoto.co.jp ◀◀◀

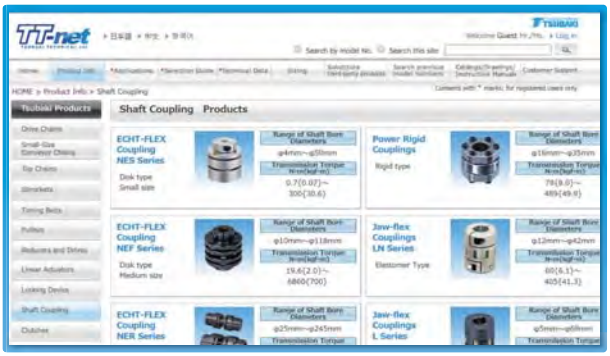

Search products quickly and easily on the site.

Scan here

1 Product handling information

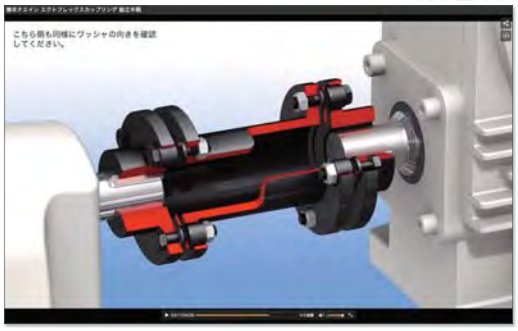

- Shows clear explanations of structures and assembly methods with 3D videos.
- Can be accessed from smartphones.

2 Selecting the products

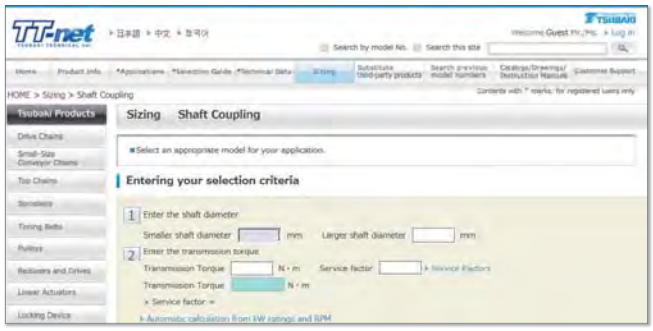

- Enter the desired shaft diameter, transmitted torque and operating rotation speed.
  Enter basic technical information, and best matching model will be selected.

3 PDF drawings

- Enter model numbers to find drawings.
- Links to PDF outline drawings, DXF drawings and 3D CAD data sites.

4 Technical drawings (2D/3D)

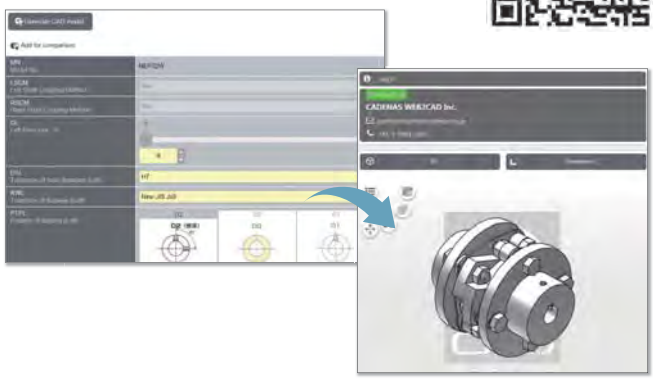

- Download both 2D and 3D data.
- Check mounting dimensions and peripheral equipment interference.

ECHT-FLEX® COUPLINGS

ECHT-FLEX® Couplings

CONTENTS

INDEX 13,14

NER Series 15–24
- Structure 15
- Features 16, 17
- Application Examples 18
- Model Number 19
- Transmission Capacity/Dimensions . 20
- Product Selection 21
- Handling 22, 23
- CFRP spacer type 24

NEF/NEH Series 25–63
- Structure 26
- Materials 27
- Environmentally Resistant Types . . . 28
- Model Number 29–32
- Bore Machining Service 33, 34
- Transmission Capacity/Dimensions 35–54
- Special Types 55–58
- Product Selection 59, 60
- Handling 61–63

NER Series

See pages 15 to 24

The center unit structure reduces the time of mounting on equipment.

NEF Series, NEH Series

Single type (Only NEF Series)

Transmission Capacity: p. 35;
Dimensions: p. 37

Type with one disk set to absorb angular misalignment and end play.

Spacer type

Transmission Capacity: p. 35;
Dimensions: p. 39, 40

Type with two disk sets to absorb angular misalignment, parallel misalignment and end play.

Long spacer type

Transmission Capacity: p. 36;
Dimensions: p. 41

Can be used as a floating shaft when the distance between shafts is large.

Series Lineup

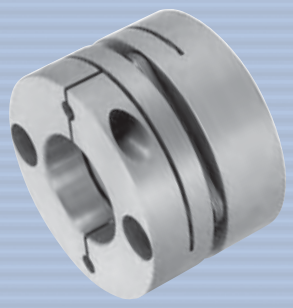

NES Series

See pages 64 to 73

Compact, lightweight disk couplings with hubs and spacers made of extra super duralumin. Spacer type and single type are available.

Hub types

Keyway coupling

See pages 35, 45, 46

The common key-based coupling method.
Keyway couplings of the new JIS normal type machined with standard bores are available for rapid delivery.

Taper-Lock coupling

See pages 47, 48

A friction coupling method that uses special Taper-Lock hubs to achieve high torque in a compact size. Ideal for servomotor drive.

Clamp coupling

See pages 49, 50

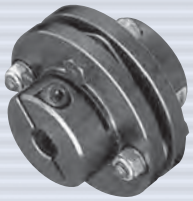

A friction coupling method using a single bolt per hub. The bolts are fastened from the direction perpendicular to the shaft, reducing space in the shaft direction.

POWER-LOCK® coupling

See pages 51 to 54

A friction coupling method combining an EL Series Power-Lock with a pressure flange. Pressure flanges can also be combined with Power-Locks of other series. Inquire for more information.

Special types

Environmentally resistant coupling

See pages 28, 58

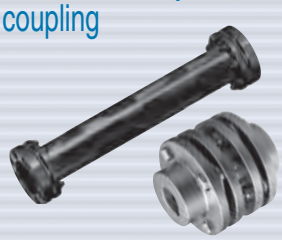

Couplings made of stainless steel and couplings plated with electroless nickel (offering outstanding cost performance for simple rustproofing) are also available.

Electrically insulated coupling

See page 57

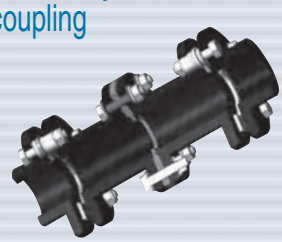

Couplings that block motor current to prevent electrolytic corrosion (bearing damage) in the machinery.

Unit spacer type

See page 55

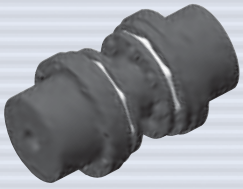

Couplings that enable spacer unit attachment and removal without disassembling the disk coupling unit.

Type for use with gear couplings

See page 56

Couplings with a shorter distance between the hub faces to enable easy replacement from a gear coupling.

NER Series ECHT-FLEX® Couplings

Designed to provide high capacity, compact size, and easy handling.

New disks and optimized bolts give NER Series ECHT-FLEX Couplings high capacity and smaller size.
The center unit structure greatly reduces mounting time on equipment.

Structure

Scan here to view the structure in 3D.

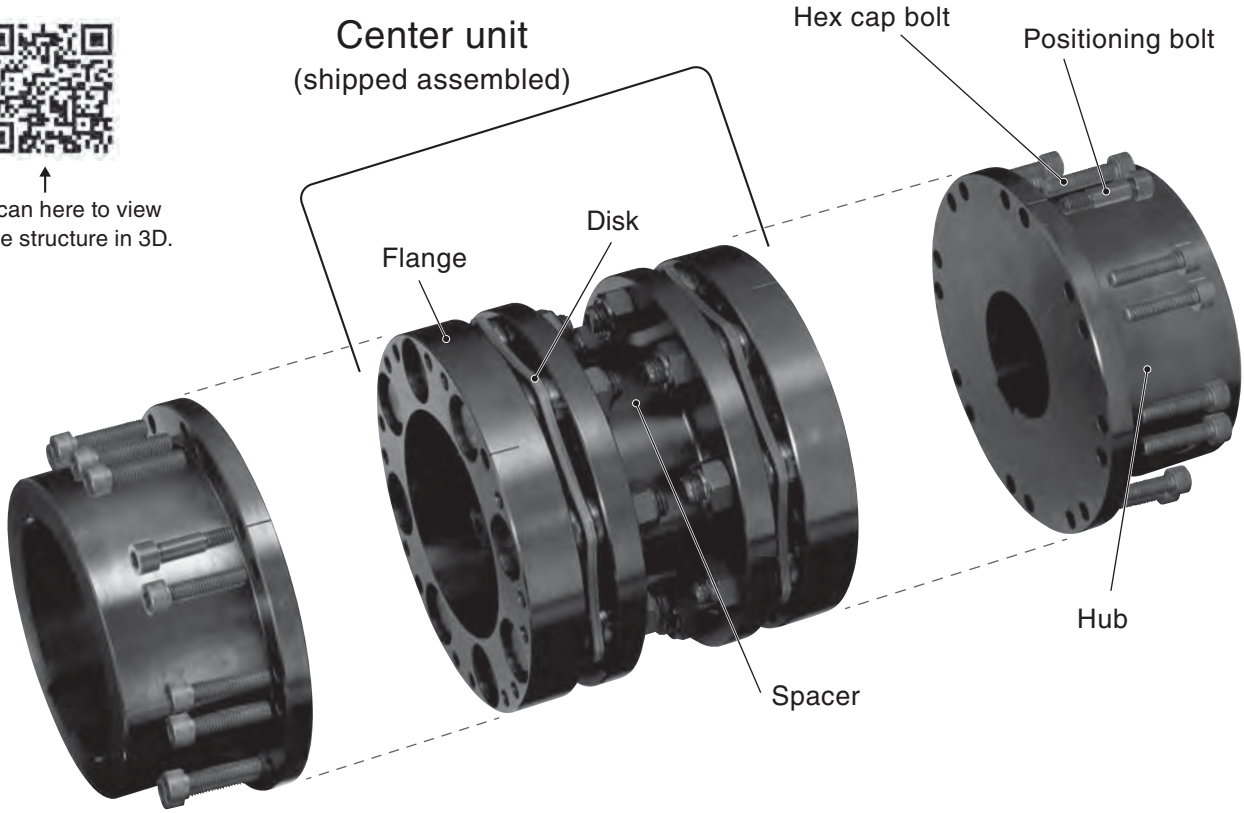

Features

■ Large transmission capacity

Greatly increased torque relative to previous series enables smaller sizes.

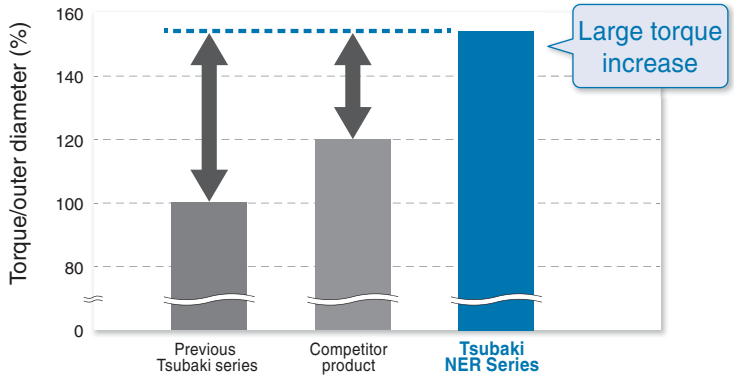

Comparison of torque for same outer diameter
500 kW at 1,450 rpm selected (service factor ≥ 2.0)

■ Easy handling

The disks and spacers have been structured as a single unit (center unit), eliminating on-site disk assemble work after centering.
Can be installed/removed just by the bolts between the center unit and hubs.

■ Large bore diameters

The use of a center unit enables larger maximum bore diameters than other models.

■ Backlash-free, long service life

NER Series models have no backlash and high torsional stiffness, making them ideal for servomotor-based positioning equipment.
No sliding parts, enabling long-term use without lubrication.

■ Wide range of options

Support a wide range of options such as reinforced plastic spacers, shaft coupling in POWER-LOCK, and flange attachments.

■ Environmentally friendly

Comply with the regulations on hazardous substances in the RoHS directive.

Features

■ Center unit structure (shipped fully assembled)

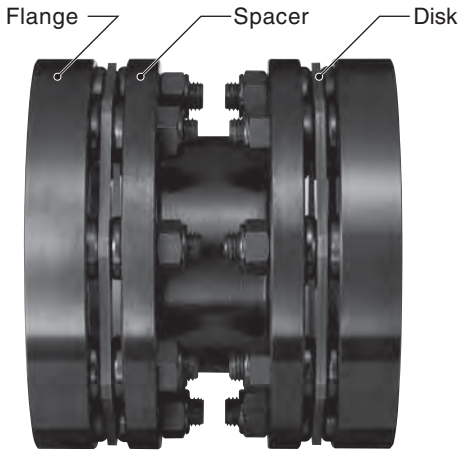

NER Series models have a center unit structure with two sets of disks (plate springs) fastened using spacers and flanges on both sides. The structure is shipped from the factory as a assembled unit.

■ Comparison of mounting work for NER Series

NEF Series

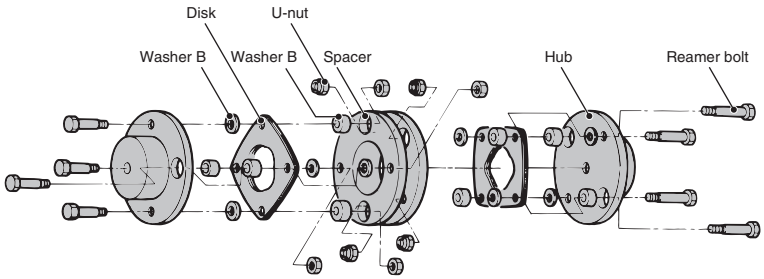

The center unit structure of the NER Series simplifies on-site work.

NER Series

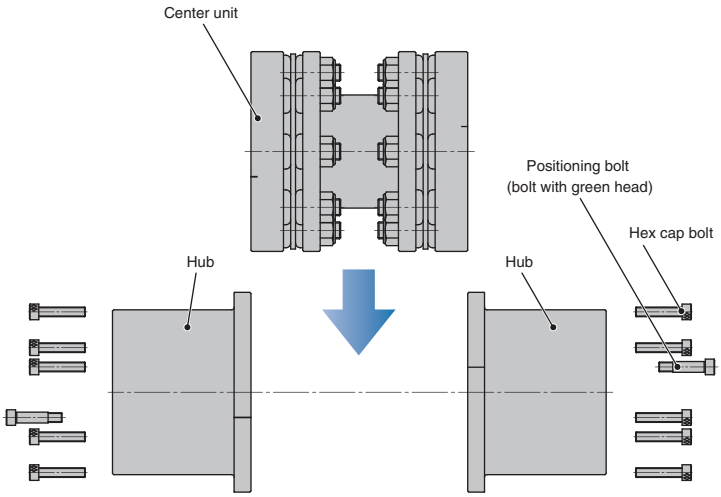

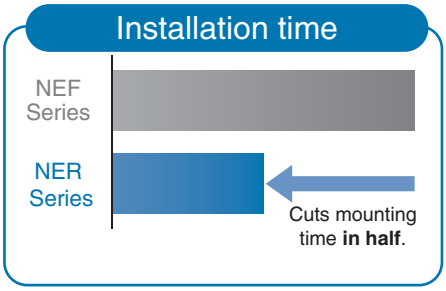

Application Examples

Pump

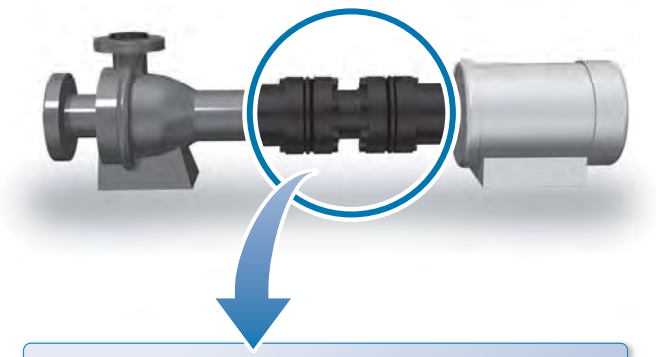

Center unit structure

The coupling can be disconnected by removing the center unit without moving the motor or pump, improving pump maintenance.

Press

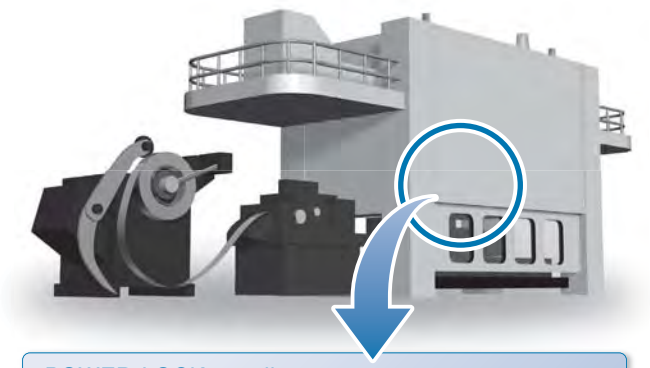

POWER-LOCK coupling type

Servomechanisms are becoming increasingly common in presses, demanding precise positioning. Backlash-free POWER-LOCK are an ideal shaft coupling method for this application.

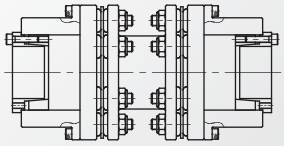

Power-Lock coupling type

Cooling tower

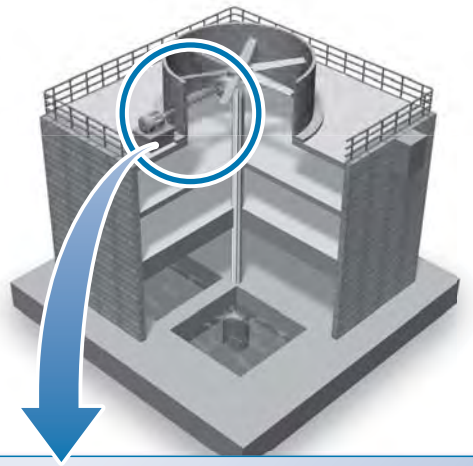

Composite spacer type

In cooling tower application, a long spacer coupling is used between motor and reducer. CFRP spacer is suitable with such corrosive environment. It is much lighter and better handling than stainless steel type.

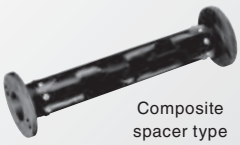

Composite spacer type

Vehicle tester

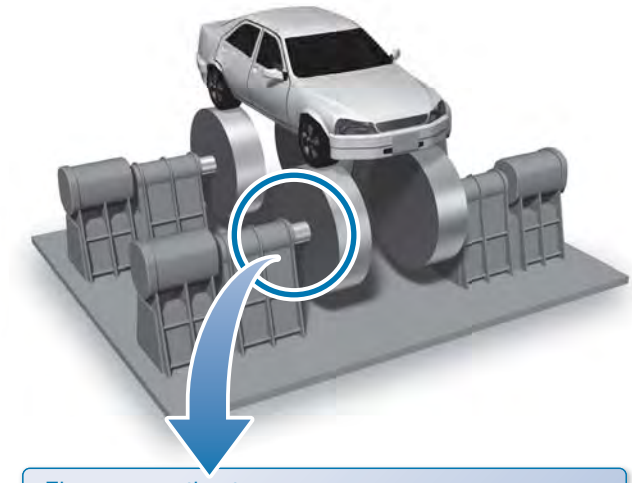

Flange-mounting type

When mounted on a part other than a shaft, the hubs can flange for connecting.

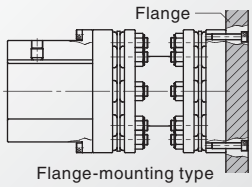

Flange-mounting type

Model Number

Spacer type

NER230 W - A R X A F 90 P D1

Model No. Spacer type Hub type

② ① ② ③ ④

Long spacer type

NER230 W - A F 70 P D1 X A G 80 J D2 - J1234

Model No. Spacer type Hub type

① ② ③ ④ ① ② ③ ④

Distance between flange faces
(JS : Standard dimension
J : Requested dimension)

①Bore tolerance

F … F7	J … JS7	M … M7	K … K7
G … G7	P … P7	N … N7	R … R7
H … H7			

②Bore diameter

Bore diameters are in integer multiples of 1 mm.
R : Pilot bores

See below.

③Keyway tolerance

J … New JIS Js9	F … Old JIS F7
P … New JIS P9	E … Old JIS E9

④Set screw position

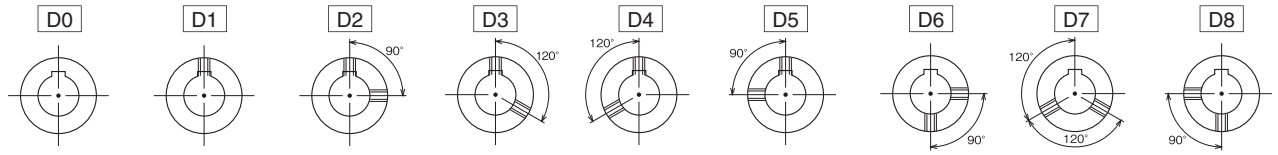

Standard bore range

Model No.	Keyway bore diameter range (1 mm increments) [mm]
NER59W	φ25 to φ65 (φ61)
NER93W	φ40 to φ85 (φ80)
NER230W	φ50 to φ90 (φ84)

Model No.	Keyway bore diameter range (1 mm increments) [mm]
NER360W	φ60 to φ105 (φ99)
NER630W	φ80 to φ125 (φ119)
NER850W	φ100 to φ145 (φ139)

* Diameters in parentheses are maximum bore diameters with old JIS machining.

Set screw position and size

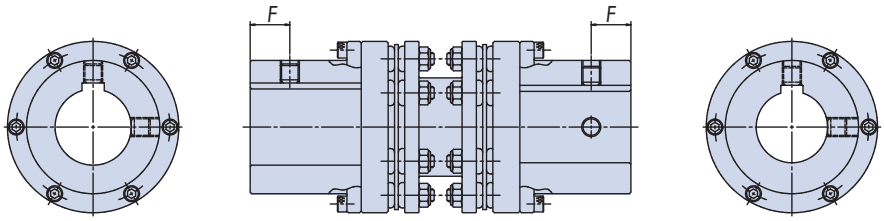

Model No.	F dimension [mm]	Bore diameter [mm]																				
		25 to 30	31 to 38	39	40 to 44	45 to 49	50 to 51	52	53 to 55	56 to 58	59	60 to 63	64	65	66 to 71	72 to 75	76 to 78	79 to 82	83 to 84	85	86 to 88	89 to 90
NER59	25	M6	M8	M10	M10	M12	M12	M10	M10	M8	M8	M6	M5	M5								
NER93	30				M10	M12	M12	M12	M12	M12	M16	M16	M16	M12	M12	M10	M8	M6	M5	M4		
NER230	35						M12	M12	M12	M12	M16	M16	M16	M16	M16	M16	M12	M12	M10	M10	M10	M8

Model No.	F dimension [mm]	Bore diameter [mm]												
		60 to 75	76 to 79	80 to 85	86 to 96	97 to 99	100 to 102	103 to 105	106 to 110	111 to 120	121 to 125	126 to 129	130 to 139	140 to 145
NER360	40	M16	M20	M20	M16	M12	M12	M10						
NER630	50			M20	M20	M20	M20	M20	M20	M16	M12			
NER850	60						M20	M20	M20	M20	M20	M20	M16	M12

Transmission Capacity

Model No.	Allowable torque [N·m]	Maximum rotation speed [r/min]	Pilot bore diameter [mm]	Keyway maximum bore diameter [mm]	Shaft-direction spring constant [N/mm]	Allowable misalignment			
						Angular misalignment θ [deg]	Parallel misalignment [mm]		End play [mm]
							Spacer type	Long spacer type	
NER59W	590	14900	20	65	350	1.4	0.7	$(J\text{-}44.4)\times\tan\frac{1}{2}\theta$	±1.4
NER93W	930	12500	20	85	380	1.4	0.9	$(J\text{-}50.6)\times\tan\frac{1}{2}\theta$	±1.4
NER230W	2300	11500	25	90	1020	1.0	0.7	$(J\text{-}58.8)\times\tan\frac{1}{2}\theta$	±1.0
NER360W	3600	9700	30	105	585	1.0	0.9	$(J\text{-}70.0)\times\tan\frac{1}{2}\theta$	±1.2
NER630W	6300	8000	35	125	945	1.0	0.9	$(J\text{-}76.4)\times\tan\frac{1}{2}\theta$	±1.6
NER850W	8500	7300	40	145	975	1.0	1.0	$(J\text{-}86.6)\times\tan\frac{1}{2}\theta$	±1.8

Dimensions

Spacer type

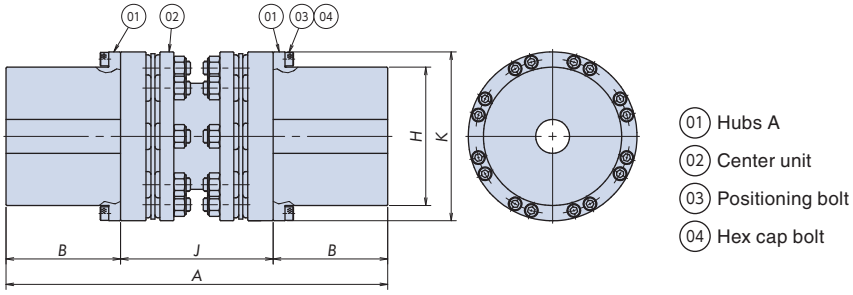

Unit: [mm]

Model No.	Overall length *A*	Hub length *B*	Inter-flange distance *J*	Boss diameter *H*	Outer diameter *K*	Weight [kg]	Moment of inertia [kg·m²]
NER59W	240	70	100	84	108	6.2	0.010
NER93W	297	85	127	105	129	10.6	0.026
NER230W	330	95	140	117	140	15.6	0.045
NER360W	410	115	180	137	166	26.1	0.105
NER630W	450	135	180	163	199	40.2	0.240
NER850W	500	150	200	184	220	53.5	0.400

Long spacer type

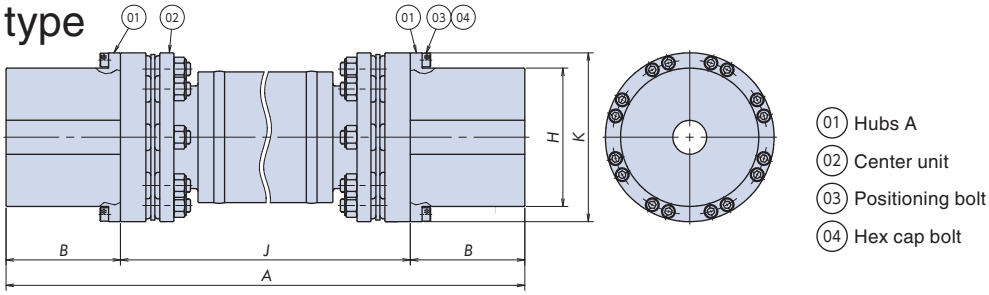

Unit: [mm]

Model No.	Inter-flange distance *J*		Pilot bore diameter	Keyway maximum bore diameter	Overall length *A*	Hub length *B*	Boss diameter *H*	Outer diameter *K*	Weight specifications		Moment of inertia specifications	
									W_1	Wk [kg]	G_1 [kg·m²]	Gk
NER59W	J	Up to 6000	20	65	2B+J	70	84	108	6.31	6.15	0.00649	0.0101
	JS	127, 140, 180, 200										
NER93W	J	Up to 6000	20	85		85	105	129	9.25	9.87	0.0131	0.0247
	JS	140, 180, 200										
NER230W	J	Up to 6000	25	90		95	117	140	16.1	31.9	0.0523	0.0407
	JS	180, 200										
NER360W	J	Up to 6000	30	105		115	137	166	18.6	25.8	0.0742	0.0983
	JS	200										
NER630W	J	Up to 6000	35	125		135	163	199	35.5	35.8	0.185	0.208
NER850W	J	Up to 6000	40	145		150	184	220	35.5	46.3	0.185	0.353

The long spacer type approximate weight and moment of inertia are calculated using the following formula (when using the maximum bore diameter):

$$\text{Weight [kg]} = (W_1/1000) \times J + Wk$$

$$\text{Moment of inertia [kg·m}^2\text{]} = (G_1/1000) \times J + Gk$$

J : The constants in the table above are used for *J* (Inter-flange distance [mm]), W_1, Wk, G_1 and Gk.

Notes 1. Long spacer types are made-to-order products.
2. Specify the *J* dimension (Inter-flange distance) when ordering.
3. Balance adjustment may be needed for high-speed use or an excessively long *J* dimension.
A hazard speed check is also needed. See Table 3 on page 21.

Product Selection

1. Correction torque calculation

1-1. When driven by servomotor

Calculate the correction torque by multiplying the servomotor's maximum torque by the service factor (SF) shown in Table 1 for the load type.

Table 1. Service factor (SF) when connected to servomotor

Load type	Uniform load	Moderately variable load	Highly variable load
Service factor (SF)	1.2	1.4	1.5

1-2. When driven by induction motor

Calculate the correction torque by multiplying the load torque calculated using the formula below by the service factor (SF) shown in Table 2 for the load type.

$$T = \frac{60000 \times P}{2\pi \times n} \left\{ T = \frac{974 \times P}{n} \right\}$$

$$T' = T \times SF$$

T = Load torque N·m {kgf·m}

P = Transmitted power kW

n = Rotation speed r/min

T' = Correction torque N·m {kgf·m}

Table 2. Service factor (SF) when connected to general-purpose motor

Load type	Motor type				
	General purpose motor, gas turbine		Engine		
	Small moment of inertia	Large moment of inertia	Four cylinders	Six cylinders	Eight cylinders
Uniform load	1.5 to 1.75	1.75 to 2.0	2.5 to 4.0	2.0 to 2.5	1.5 to 2.0
Moderately variable load	2.0 to 2.5	2.5 to 3.0	4.0 to 5.0	2.5 to 3.5	2.0 to 3.0
Highly variable load	3.0 to 4.5	4.5 to 6.0	4.5 to 5.5	3.0 to 4.0	2.5 to 3.5

* If shock loads will be applied, calculate the correction torque by multiplying the motor's maximum output torque by a shock factor of 1 to 2.5.

2. Shaft diameter

Check that the shafts to be mounted are within the coupling's range of mountable shaft diameters.

3. Long spacer type rotation limit

When long spacer types are used at high speeds, the rotation speed needs to be checked to avoid the resonance point.

When selecting long spacer types, check each *J* dimension and whether its rotation speed is within the limit.

If the operating rotation speed exceeds the value shown below, a larger size must be selected.

If the operation speed is not in the ranges shown below, please contact us.

Table 3. Long spacer length (*J* dimension) limits

Unit: [mm]

Operating rotation speed [r/min] / Model No.	3600	2000	1800	1500	1200	1000	900	750	720	600	500	400	300	200	150
NER59W	1470	1960	2070	2260	2520	2750	2900	3170	3240	3540	3870	4330	4990		
NER93W	1600	2130	2240	2450	2730	2980	3140	3440	3510	3840	4200	4690	5400		
NER230W	1930	2560	2700	2950	3290	3590	3790	4140	4220	4620	5060	5650			
NER360W	2080	2760	2910	3180	3540	3870	4080	4460	4550	4980	5440				
NER630W	2230	2960	3110	3400	3790	4140	4360	4770	4870	5330					
NER850W	2240	2970	3120	3410	3800	4160	4380	4780	4880	5340					

Handling

This section describes the general handling procedures used for NER Series ECHT-FLEX Couplings. For more information, see the instruction manual provided with the product.

1. Installing hubs to the shafts

Cautions

1. Check the coupling components against the list of components in the instruction manual.
2. The center unit has been optimally assembled at the factory. Use it as-is, without disassembling it.
3. Do not subject the center unit to large forces, especially in the shaft direction. It may cause the disks in a bent state, and damage the disks.

Installing procedure

(1) Check that the drive shaft, driven shaft and hub bores are free from burrs, scratches, dirt and rust. Wipe off any dirt or oil.
(2) Mount the hubs to the shafts. If bore is for tight fit, heat the hub uniformly with heated oil (of 150°C or less) to quickly mount it at the proper position on the shaft.
(3) The distance between the hub flange faces is given in Item (1) of Section 2 below.

2. Centering

The more accurate the initial centering of the coupling, the less eccentric rotational stress it will experience during operation. Changes during operation caused by factors such as bearing wear, mounting surface subsidence, temperature-induced state changes, and vibrations can reduce the life of the coupling or your equipment. Periodically center the coupling using the procedure below.

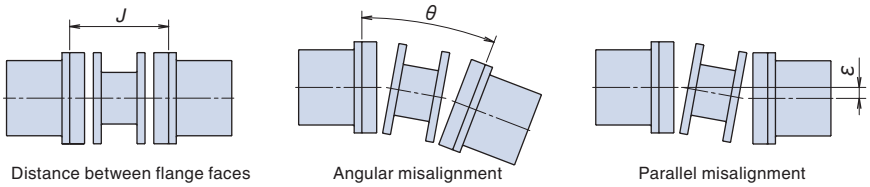

Distance between flange faces　　Angular misalignment　　Parallel misalignment

The error in the distance between the coupling's flange faces, the allowable angular misalignment, and the parallel misalignment are all related to each other. Increasing one factor decreases the others, so the factors need to be considered together. Perform the initial centering procedure precisely, to within the recommended centering values below.

(1) Adjusting the distance between the flange faces (*J*)

Measure the overall length of the center unit, and use this value as the *J* dimension. (The center unit's overall length may be longer or shorter than the reference value depending on the combination of part tolerances. In this case, it may be difficult to attach the center unit even when the hubs are set within *J* ± 0.5 mm in the drawing reference dimensions.) Measure the *J* dimension at four places every 90 degrees, and adjust the hub positions so that the average of these measurements is within *J* ± 0.5 mm. If the drive shaft or driven shaft is a stepped shaft, the adjustment margin may be restricted, so take steps to enable the *J* dimension to be adjusted beforehand.

(2) Adjusting the angular misalignment (θ)

(a) Fasten a dial gauge to one of the hubs as shown in the diagram. Rotate the hub to find the minimum reading on the dial gauge, and zero the gauge at that point.
(b) Rotate the hub on the dial gauge side by 360 degrees, and read the angular misalignment value.
(c) Adjust the equipment by moving it with a shim so that the reading on the dial gauge comes within the recommended angular misalignment range specified in Table 1.

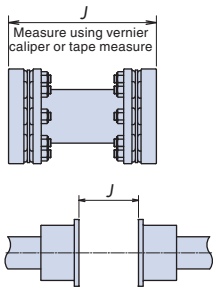

(3) Adjusting the parallel misalignment (ε)

(a) Attach a dial gauge to a hub flange as shown in the diagram. Rotate that hub to find the minimum reading on the dial gauge, and zero the gauge at that point.
(b) Rotate the hub attached to the dial gauge by 360 degrees, and read the parallel misalignment value.
(c) The reading on the dial gauge around the periphery of the hub may fluctuate abnormally at the hub's drilled bore because the flange expanded toward the periphery when the drilled bore was machined. Avoid these locations when reading the dial gauge.
(d) Adjust the equipment by moving it with a shim so that the reading on the dial gauge comes within twice the recommended parallel misalignment range specified in Table 1 or Table 2.
(e) If the equipment was moved to adjust the parallel alignment, readjust the angular alignment.

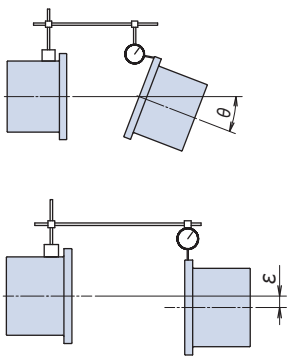

Table 1 Recommended centering values (standard spacers)

Model No.	Recommended centering values			
	Angular misalignment		Parallel misalignment	Distance between flange faces
	θ [deg]	T.I.R. [mm]	ε [mm]	J [mm]
NER59W	0.35°	0.33	0.18	±0.5
NER93W	0.35°	0.39	0.22	±0.5
NER230W	0.25°	0.31	0.18	±0.5
NER360W	0.25°	0.36	0.22	±0.5
NER630W	0.25°	0.43	0.22	±0.5
NER850W	0.25°	0.48	0.25	±0.5

Table 2 Recommended centering values (long spacers)

Model No.	Recommended centering values			
	Angular misalignment		Parallel misalignment (formula)	Distance between flange faces
	θ [deg]	T.I.R. [mm]	ε [mm]	J [mm]
NER59W	0.35°	0.33	$(J-27.4)\times0.31\times10^{-2}$	±0.5
NER93W	0.35°	0.39	$(J-30.6)\times0.31\times10^{-2}$	±0.5
NER230W	0.25°	0.31	$(J-35.8)\times0.22\times10^{-2}$	±0.5
NER360W	0.25°	0.36	$(J-43)\times0.22\times10^{-2}$	±0.5
NER630W	0.25°	0.43	$(J-46.4)\times0.22\times10^{-2}$	±0.5
NER850W	0.25°	0.48	$(J-52.6)\times0.22\times10^{-2}$	±0.5

Relationship between angular misalignment and parallel misalignment

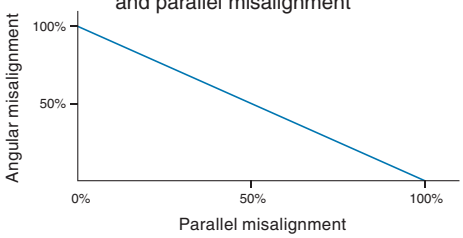

3. Installing center unit

(1) Mount the center unit to the hubs after referring to the component drawing in the instruction manual.

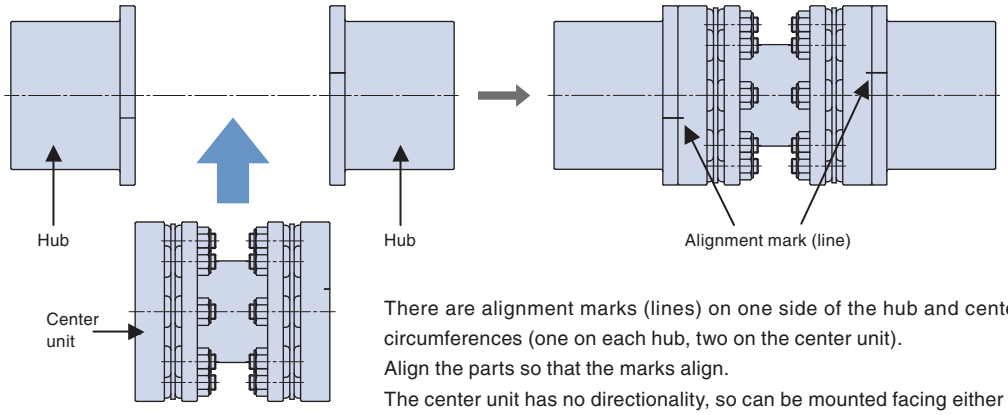

There are alignment marks (lines) on one side of the hub and center unit outer circumferences (one on each hub, two on the center unit).
Align the parts so that the marks align.
The center unit has no directionality, so can be mounted facing either right or left.

Figure 1. Installing center unit

(2) Fasten the hubs and center unit using the positioning bolts and hex socket head bolts.

When fastening the hubs and center unit, insert the positioning bolts (with green heads) into the drilled holes at the alignment marks (lines). The positioning bolts will not fit into other drilled holes. There are two positioning bolts (with green heads) on each side, located 180 degrees apart. (There are a total of four positioning bolts per coupling.)

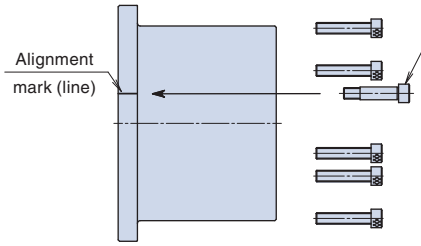

Be sure to tighten the positioning bolt and hex cap bolts to the torque specified in Table 3.

Figure 2. Positioning bolt and hex cap bolt insertion

Table 3. Positioning bolt and hex cap bolt tightening torques

Model No.	Bolt size	Tightening torque [N·m]
NER59W	M6	14
NER93W	M6	14
NER230W	M6	14
NER360W	M8	34
NER630W	M10	67
NER850W	M10	67

(3) When you have assembled the coupling, remove the disk protective plates on the disks.

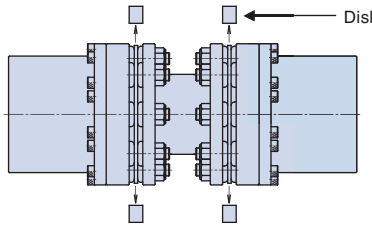

Four disk protective plates are attached (two on each disks).

4. Inspection

Re-check the angular misalignment and parallel misalignment one or two hours after starting actual operation.
After the check, refasten the positioning bolts and hex socket head bolts to the torque specified in Table 3.
Also check for problem parts or looseness in the positioning bolts and hex sock head bolts every 6 months to one year.
After installing the equipment, marking the positioning bolts, hex socket head bolts and hubs to enable checks for looseness is recommended.
Also check for problems in other parts.

NER Series ECHT-FLEX® Couplings CFRP Spacer Type

By adopting carbon-fiber-reinforced plastic (CFRP) as a spacer material, the NER series CFRP spacer type features outstanding lightness and corrosion resistance in addition to its intrinsic characteristics.

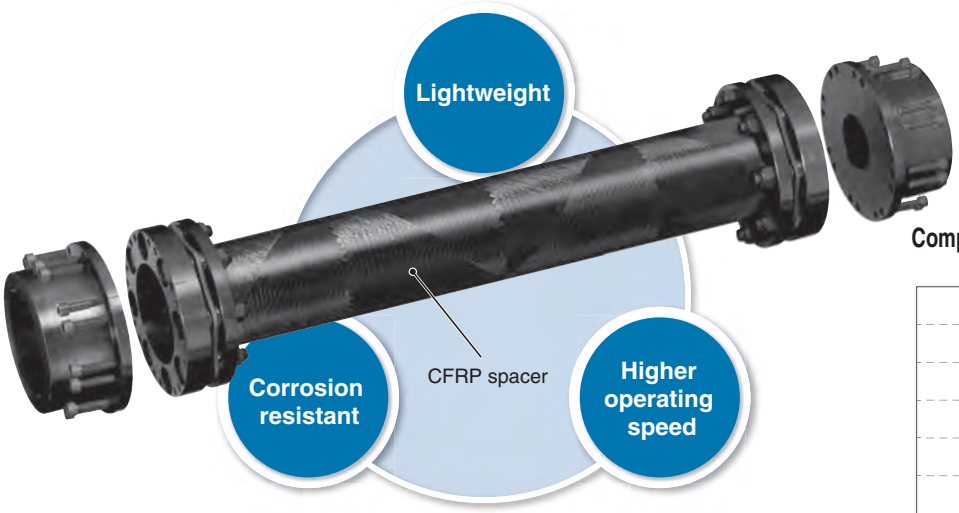

Comparison of NER230W spacer weights
(Inter-flange distance: 2,000 mm)

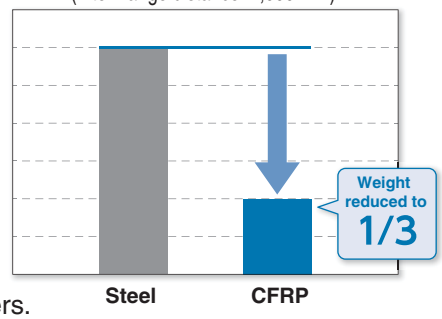

What is carbon-fiber-reinforced plastic (CFRP)?

Carbon-fiber-reinforced plastic is a plastic composite that contains carbon fibers. This polymer features the same level of strength as steel while being lightweight and highly corrosion-resistant, making it applicable for a wide range of products, including aircraft and automobiles.

Application Examples

Vehicle testers

Significantly lighter weight

CFRP spacers substantially reduce the weight. The lighter weight improves transportability, installation, and mounting.

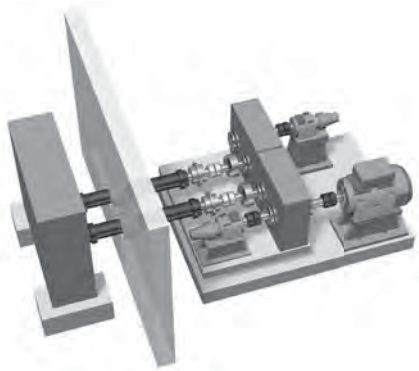

Industrial cooling towers

Outstanding corrosion resistance

The NER series CFRP spacer type can be used in environments corrosive.
Under certain conditions, it can provide corrosion resistance that outclasses that of stainless steel.

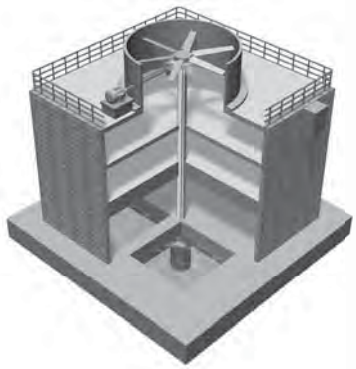

Model Number

CFRP spacer type

NER230 W - A R X A F 90 P D1 - JC2000

- Spacer type
- Hub type
- Bore diameter (mm): R ... Pilot bore
- Bore tolerance
- Keyway tolerance
- Set screw position
- Inter-flange distance (mm): JC ... CFRP spacer

See the model number indication on page 19 for more information.

The CFRP spacer type is made-to-ordered product.
For more information on specifications and availability, please contact us.

NEF & NEH Series ECHT-FLEX® Couplings

The design of Tsubaki's ECHT-FLEX Couplings has been optimized using the FEM Analysis to ensure reliable torque transmission and absorption of misalignment. In addition to these basic features, the couplings also ensure high-precision positioning of servomotor drives and eliminate the need for lubrication, providing the clean operation environment.

Wide-ranging Lineup

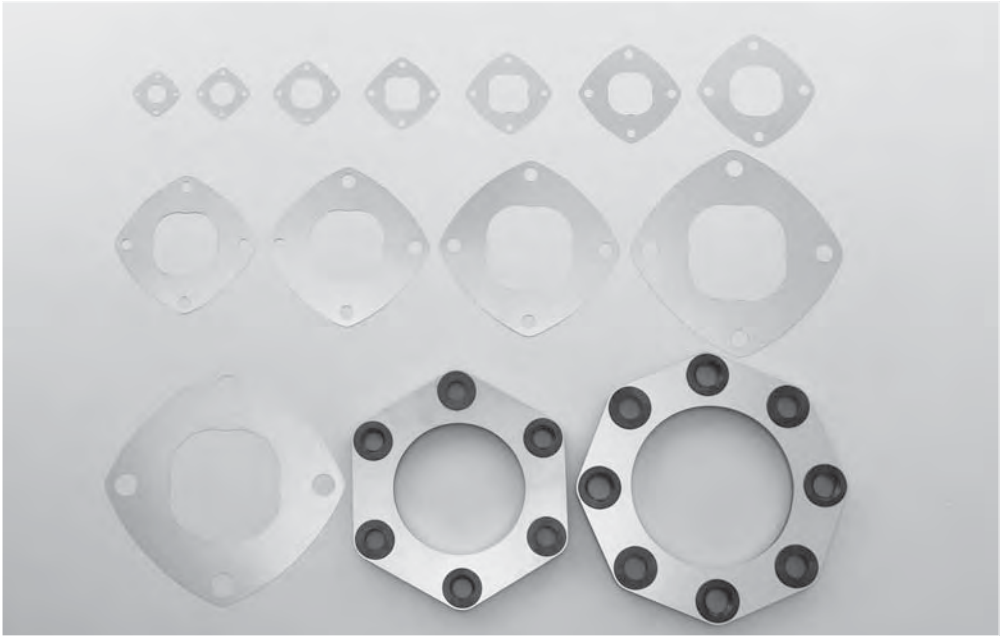

Disk and hub designs have been optimized using the finite element analysis method.

Structure

NEF Series

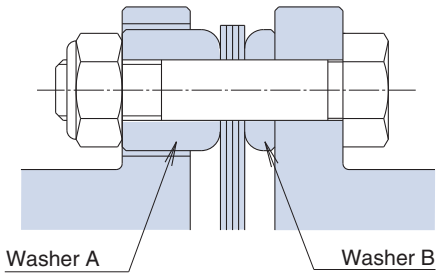

Spacer type

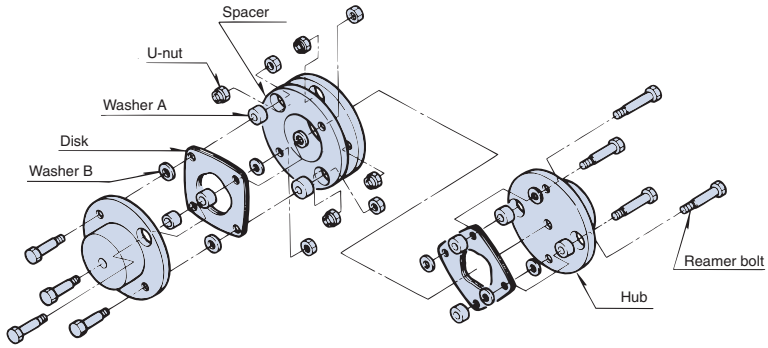

Single type

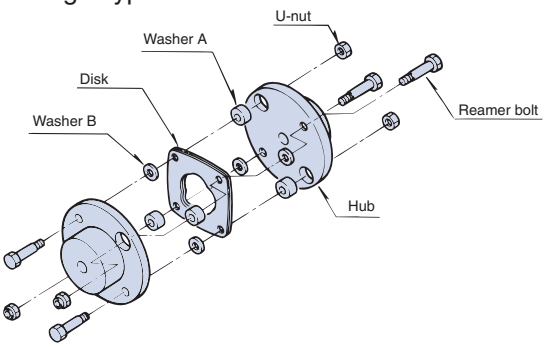

Long spacer type

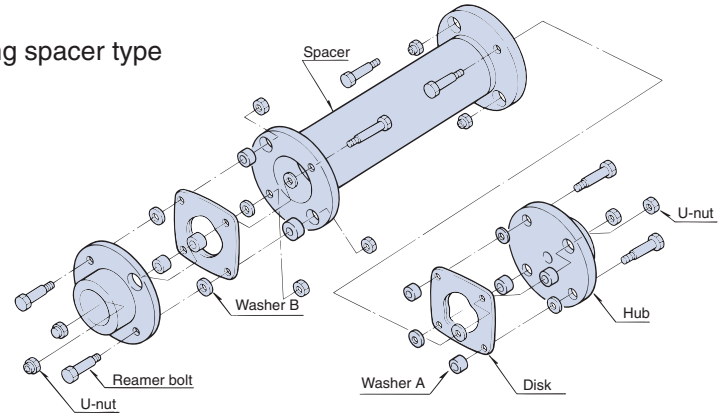

NEH Series

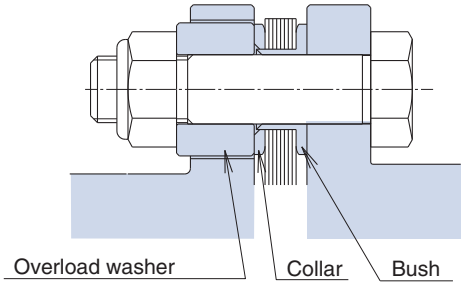

Spacer type

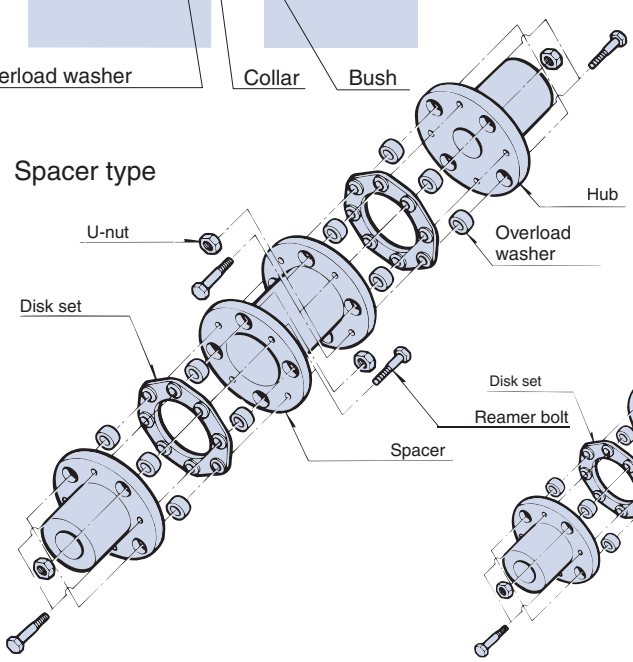

Long spacer type

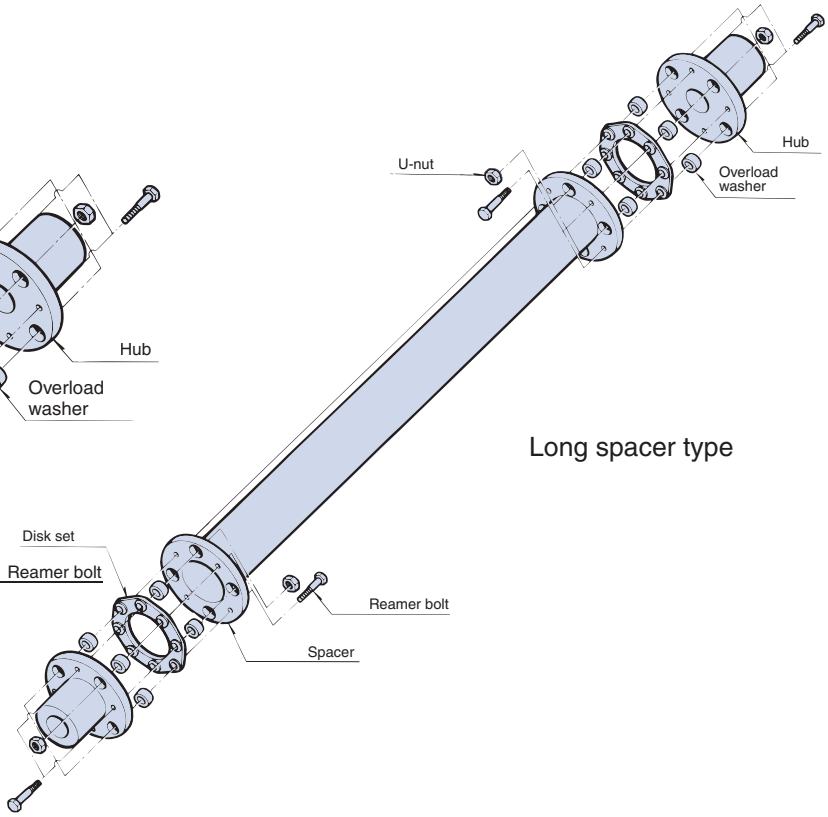

Materials and Surface Processing

Spacer type

A 100% stainless steel type is also available.
See page 28.

Long spacer type

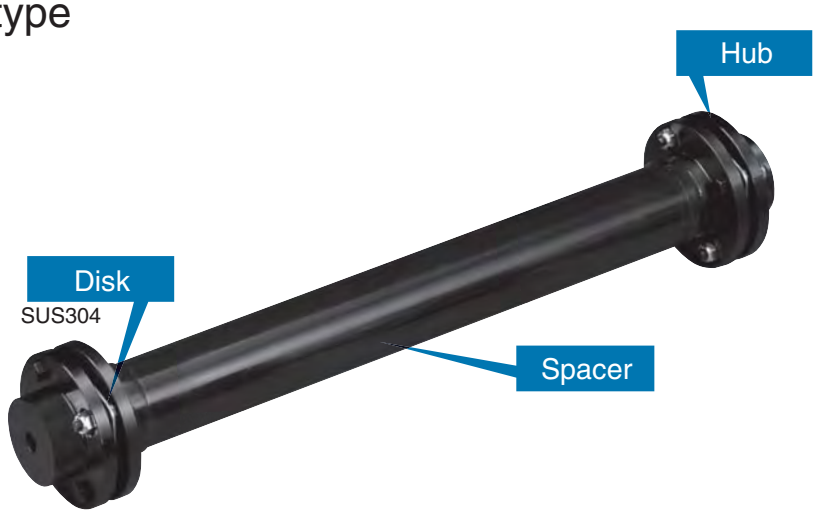

Taper-Lock coupling

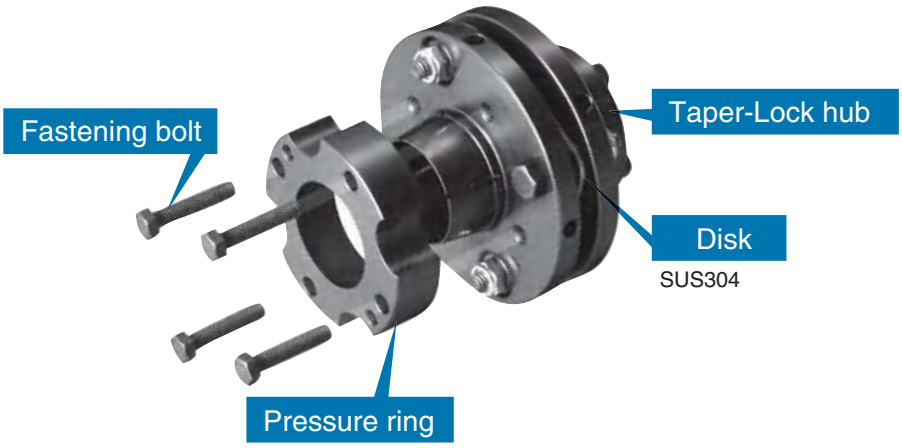

Environmentally Resistant Types

Stainless steel NEF Series models

Features

Rust-resistant, clean operation
All parts are made of stainless steel, providing outstanding corrosion resistance.

Low-dust, clean operation
Torque is transmitted by frictional force, eliminating sliding between parts and dust generated by wear.

Applications

- Rustproofing in clean rooms.
- In direct contact with water, such as in food processing machinery.
- In highly corrosive atmospheres such as water treatment facilities.

* The NEF series can be used in a vacuum. Contact a Tsubaki representative for specifications.

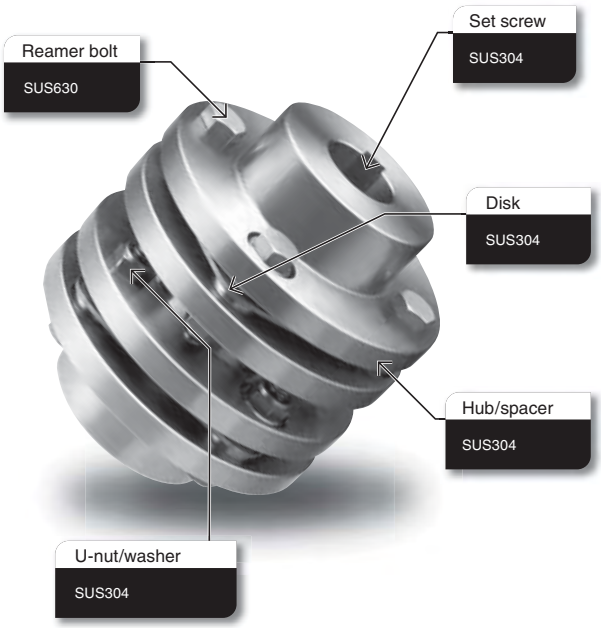

Electroless nickel-plated NEF Series models

Features

Outstanding cost performance
Provide better cost performance than stainless steel models, enabling use in a wide range of applications.

Fine appearance
Coated with a peel-resistant film of uniform thickness, providing an fine appearance.

Applications

- Simple rustproofing in clean rooms.
- Relatively low air cleanliness classes.
- Flat panel display transport/elevator equipment.
- Light rustproofing such as in high-humidity environments.

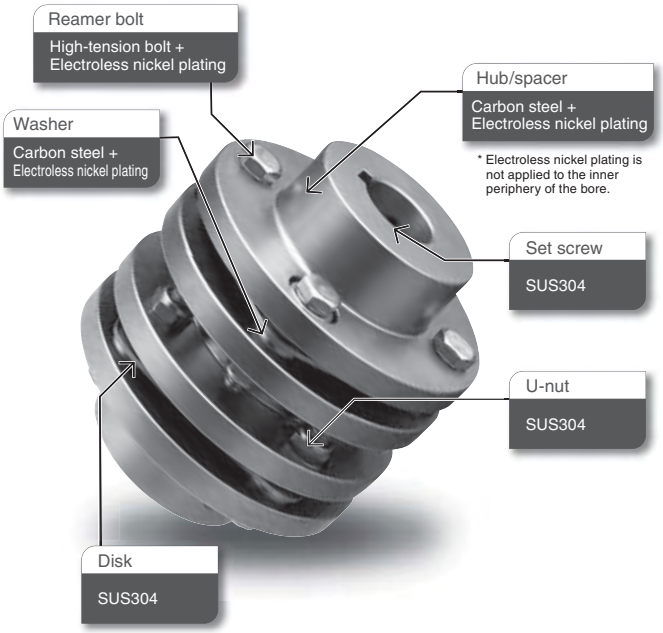

CFRP spacer NEF Series models

Features

Lightweight and highly corrosion-resistant

Model Number

NEF Series

NEF 700 W M - N H 70 E D2 X K H 120 J D2 - J1000

Series

NEF

Size

Size (Allowable torque [N·m])
02 (19.6)
04 (39.2)
10 (98)
18 (176)
25 (245)
45 (441)
80 (784)
130 (1270)
210 (2060)
340 (3330)
540 (5290)
700 (6860)

Shape

S: Single type

W: Spacer type

Surface processing

No code: Standard type

M: Electroless nickel-plated type

Y: Stainless steel type

Key coupling

Hub type

K

N: Standard hub

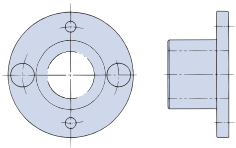

K: Enlarged hub

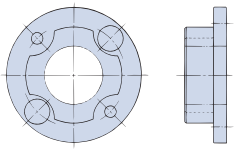

L: Extended hub

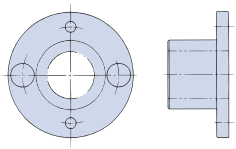

Bore tolerance

H

- F ··· F7
- G ··· G7
- H ··· H7
- J ··· JS7
- P ··· P7
- M ··· M7
- N ··· N7
- K ··· K7
- R ··· R7

Friction clamping/Taper shaft bore

Taper-Lock coupling

Model No.	Bore diameter range
NEF04	φ10 to φ22
NEF10	φ14 to φ35
NEF18	φ15 to φ38
NEF25	φ24 to φ50

Hub code: Hxx
(xx: Bore diameter)

Clamp coupling

Model No.	Bore diameter range
NEF02	φ10 to φ25
NEF04	φ12 to φ25
NEF10	φ15 to φ35
NEF18	φ14 to φ35
NEF25	φ25 to φ42
NEF45	φ30 to φ55

Hub code: □ xx
(□ : Hub type
xx: Bore diameter)

End shapes can be flexibly customized to your needs, such as

Notes: 1. Place the pilot bore (symbol R) first.
2. Place the smaller bore diameter first.
3. If the shaft bore diameters are the same for different hubs, the hubs should be described in alphabetical order.

Bore diameter

120

Model No.	Keyway bore machining range [mm]	
	N: Standard hub L: Extended hub	K: Enlarged hub
NEF02	φ9 to φ20	φ21 to φ25
NEF04	φ9 to φ23	φ24 to φ29
NEF10	φ11 to φ32	φ33 to φ40
NEF18	φ14 to φ35	φ36 to φ42
NEF25	φ16 to φ42	φ43 to φ48
NEF45	φ16 to φ50	φ51 to φ60
NEF80	φ17 to φ60	φ61 to φ70
NEF130	φ28 to φ74	φ75 to φ80
NEF210	φ28 to φ83	φ84 to φ90
NEF340	φ46 to φ95	φ96 to φ110
NEF540	φ52 to φ109	φ110 to φ120
NEF700	φ52 to φ118	φ119 to φ130

See page 34 for stock products.

Keyway tolerance

J

- J … New JIS Js9 (standard)
- P … New JIS P9
- F … Old JIS F7
- E … Old JIS E9

Set screw position

D2

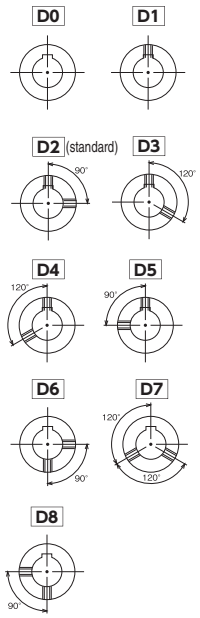

Standing type

When using a long spacer type in the vertical drive, add "V" after the set screw position symbol for the side that will be used as the ground (bottom) side.

Inter-flange distance

Indication is only necessary when using a long or single-plate spacer type.

JSxxx:
Standard-dimension long spacer type
(Stock product)

Jxxx:
Welded long spacer type
(Custom product)
Available in preferred size up to 6,000 mm.

JTxxx:
Single-plate spacer type
(for shorter overall length than standard spacer type)

See pages 41 to 44 for details.

POWER-LOCK fastening

Model No.	Bore diameter range
NEF04	φ10 to φ22
NEF10	φ14 to φ35
NEF18	φ15 to φ38
NEF25	φ18 to φ42

Hub code: □ xxP2
(□ : Hub type
xx: Bore diameter
Number: Quantity)

Tapered bore machining

Model No.	Hub code:
NEF04	N11T
	N16T
	L16T
NEF10	N16T
	L16T

See page 38 for more information on hub codes.

one end having key coupling and other end friction clamping.

Pilot bore models

NR: Standard hub with pilot bore

KR: Enlarged hub with pilot bore

LR: Extended hub with pilot bore

A website for general technical information on Tsubaki's power transmission equipment TT-net
https://tt-net.tsubakimoto.co.jp

Model Number

NEH Series

NEH 14 W - N H 100 J D2 X A H 120 J D2 - J1000

Series

NEH

Size

Size (Allowable torque [N·m])
09 (8820)
14 (13700)
20 (19600)
30 (29400)
41 (40200)
55 (40200)
70 (68600)
90 (88200)
110 (108000)
135 (132000)
150 (147000)
180 (176000)

Shape

W: Spacer type

U: Unit spacer type

Key coupling

Hub type

N

N: Standard hub

A: Adapter hub

U: Unit hub

Bore tolerance

H

- F ··· F7
- G ··· G7
- H ··· H7
- J ··· JS7
- P ··· P7
- M ··· M7
- N ··· N7
- K ··· K7
- R ··· R7

Special Types

Replacement type for gear couplings (Page 56)

Available sizes: NEF45G - NEF700G

NEH09G - NEH41G

NEF45 G - GR X G H 40 J D2

G type

Hubs for G type
GR: Pilot bore models

Bore diameter

120

Model No.	Bore machining range [mm] Size in parentheses is when using with an adapter hub
NEH09	φ72 to φ111 (φ158)
NEH14	φ72 to φ111 (φ158)
NEH20	φ77 to φ133 (φ182)
NEH30	φ77 to φ152 (φ206)
NEH41	φ122 to φ165 (φ224)
NEH55	φ132 to φ187
NEH70	φ112 to φ205
NEH90	φ122 to φ231
NEH110	φ192 to φ254
NEH135	φ142 to φ263
NEH150	φ152 to φ275
NEH180	φ162 to φ289

Keyway tolerance

J

- J … New JIS Js9 (standard)
- P … New JIS P9
- F … Old JIS F7
- E … Old JIS E9

Set screw position

D2

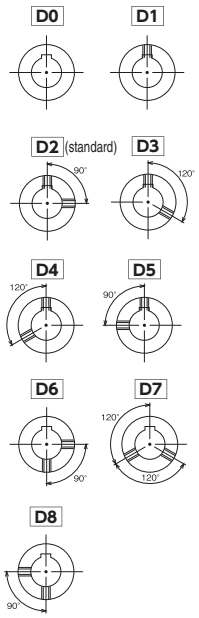

Standing type

When using a long spacer type in the vertical drive, add "V" after the set screw position symbol for the side that will be used as the ground (bottom) side.

Distance between hub faces

Only for a long spacer type.

Jxxx:
Welded long spacer type
(Made-to-order)
NEH09 to NEH41
: Max. 6,000 mm
NEH55 to NEH180
: Max. 4,000 mm

Contact Tsubaki for information when other than keyway connection.

Electrically insulated type (Page 57)
Available sizes: NEF80W to NEF700W
NEH09W to NEH30W

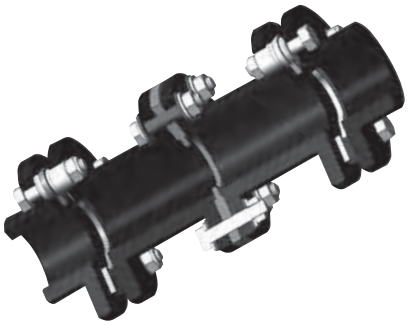

NEF80W-NH50JD2 X NH60ED3- JE 225

Electrically insulated spacer

Bore Machining Service

Bore machining available in 1 mm increments in addition to expanded variations of bore tolerances, keyway tolerances, and set screw positions.
The following combinations all have the same price.

Key coupling

Standard bore combination

NEF700 W - N H 70 E D2 X K H 120 J D2

Hub shape

- N … Standard hub
- K … Enlarged hub
- L … Extended hub

Bore diameter

Bore diameters are in integer multiples of 1 mm.
See below.

Bore tolerance

- F … F7
- G … G7
- H … H7
- J … JS7
- P … P7
- M … M7
- N … N7
- K … K7
- R … R7

Keyway tolerance

- J … New JIS Js9(standard)
- P … New JIS P9
- F … Old JIS F7
- E … Old JIS E9

Set screw position

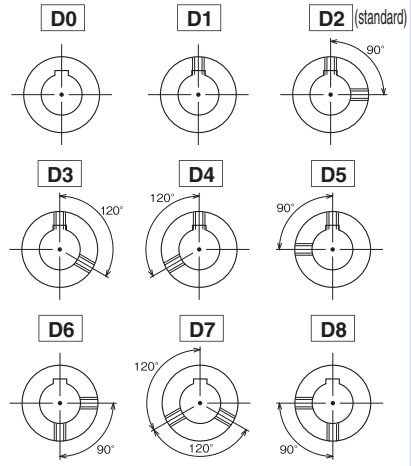

Enlarged hubs support only D0, D1, D2, D5, D6, and D8 due to the hub shape.

Other coupling bore

Model No.	Coupling method	Bore diameter [mm]												
		10	11	12	14	15	16	17	18	19	20	22	24	25
NEF02	Clamp	N10C		N12C	N14C	N15C	N16C	N17C	N18C	K19C	K20C	K22C	K24C	K25C
NEF04	Clamp			N12C	N14C	N15C	N16C	N17C	N18C	K19C	K20C	K22C	K24C	K25C
	Power-Lock	K10P2		K12P2	K14P2	K15P2	K16P2	K17P2	K18P2	K19P2	K20P2	K22P2		
	Taper-Lock	H10	H11	H12	H14	H15	H16	H17	H18	H19	H20	H22		
NEF10	Clamp					N15C			N18C	N19C	N20C	N22C	B24C	B25C
	Power-Lock			B12P2	B14P2	B15P2	B16P2	B17P2	B18P2	B19P2	B20P2	B22P2	B24P2	B25P2
	Taper-Lock				H14	H15	H16	H17	H18	H19	H20	H22	H24	H25
NEF18	Clamp									N19C	N20C	N22C	N24C	N25C
	Power-Lock				B14P2	B15P2	B16P2	B17P2	B18P2	B19P2	B20P2	B22P2	B24P2	B25P2
	Taper-Lock					H15	H16	H17	H18	H19	H20	H22	H24	H25
NEF25	Clamp													N25C
	Power-Lock								B18P2	B19P2	B20P2	B22P2	B24P2	B25P2
	Taper-Lock												H24	H25

Model No.	Coupling method	Bore diameter [mm]												
		30	32	33	35	36	38	40	42	43	45	46	48	50
NEF45	Clamp	N30C	N32C		N35C			N40C	N42C		K45C			K50C

Model No.	Keyway bore machining range [mm]		
	Standard hub：NH□□JD2	Extended hub：LH□□JD2	Enlarged hub：KH□□JD2
NEF02	12,14,15,16,19,20	—	25
NEF04	10,11,12,14,15,16,17,18,19,20,22	—	24,25,28
NEF10	12,14,15,16,17,18,19,20,22,24,25,28,30,32	15,19,24,25	35
NEF18	14,15,16,17,18,19,20,22,24,25,28,30,32,35	25,32	38
NEF25	17,18,19,20,22,24,25,28,30,32,35,38,40,42	35,38	45,48
NEF45	25,28,30,32,35,38,40,42,45,48,50	40	—
NEF80	30,32,35,38,40,42,45,48,50,55,60	40	—
NEF130	35,38,40,42,45,48,50,55,60,65,70	—	—

* See four-day and five-day delivery for combinations other than those listed above.

Model No.	Keyway bore machining range [mm]	
	N：Standard hub L：Extended hub	K：Enlarged hub
NEF02	φ9 to φ20	φ21 to φ25
NEF04	φ9 to φ23	φ24 to φ29
NEF10	φ11 to φ32	φ33 to φ40
NEF18	φ14 to φ35	φ36 to φ42
NEF25	φ16 to φ42	φ43 to φ48
NEF45	φ16 to φ50	φ51 to φ60
NEF80	φ17 to φ60	φ61 to φ70
NEF130	φ28 to φ74	φ75 to φ80
NEF210	φ28 to φ83	φ84 to φ90

* Electroless nickel-plated type Fit Bore® couplings are supported up to standard hub NEF45.
* Enlarged hubs support only D0, D1, D2, D5, D6, and D8.

Model No.	Keyway bore machining range [mm]	
	N：Standard hub L：Extended hub	K：Enlarged hub
NEF340	φ46 to φ95	φ96 to φ110
NEF540	φ52 to φ109	φ110 to φ120
NEF700	φ52 to φ118	φ119 to φ130

A website for general technical information on Tsubaki's power transmission equipment TT-net
https://tt-net.tsubakimoto.co.jp

	Bore diameter [mm]														
	28	29	30	32	33	35	36	38	40	42	43	45	46	48	50
	B28C		B30C	B32C		B35C									
	B28P2		B30P2	B32P2		B35P2									
	H28		H30	H32		H35									
	B28C		B30C	B32C		B35C									
	B28P2		B30P2	B32P2		B35P2									
	H28		H30	H32		H35		H38							
	N28C		N30C	B32C		B35C		B38C	B40C	B42C					
	B28P2		B30P2	B32P2		B35P2	B36P2	B38P2	B40P2	B42P2					
	H28		H30	H32		H35		H38	H40	H42		H45		H48	H50

	Bore diameter [mm]				
	52	55	56	57	60
		K55C			

Transmission Capacity

NEF single type

NEF spacer type

NEH spacer type

NEF single type

Model No.	Allowable torque [N·m{kgf·m}]	Maximum rotation speed [r/min]	Torsional stiffness [N·m/rad]	Shaft-direction spring constant [N/mm]	Allowable misalignment	
					Angular misalignment [deg]	End play [mm]
NEF02S	19.6{ 2}	20000	1.96×10^4	68.6	1	± 0.8
NEF04S	39.2{ 4}	20000	2.45×10^4	40.2	1	± 0.8
NEF10S	98 { 10}	20000	8.82×10^4	58.8	1	± 1.0
NEF18S	176 { 18}	18000	15.7×10^4	127	1	± 1.2
NEF25S	245 { 25}	15000	25.5×10^4	157	1	± 1.4
NEF45S	441 { 45}	13000	44.1×10^4	219	1	± 1.6
NEF80S	784 { 80}	12000	78.4×10^4	307	1	± 1.8
NEF130S	1270 {130}	10000	14.7×10^5	355	1	± 2.5
NEF210S	2060 {210}	8000	22.5×10^5	441	1	± 2.7
NEF340S	3330 {340}	7500	32.3×10^5	470	1	± 3.3
NEF540S	5290 {540}	3400	43.1×10^5	549	1	± 3.8
NEF700S	6860 {700}	3100	58.8×10^5	588	1	± 4.0

NEF spacer type

Model No.	Allowable torque [N·m{kgf·m}]	Maximum rotation speed [r/min]	Torsional stiffness [N·m/rad]	Shaft-direction spring constant [N/mm]	Allowable misalignment		
					Angular misalignment [deg]	Parallel misalignment [mm]	End play [mm]
NEF02W	19.6{ 2}	20000	1.00×10^4	34.3	2	0.3	± 1.6
NEF04W	39.2{ 4}	20000	1.18×10^4	20.6	2	0.5	± 1.6
NEF10W	98 { 10}	20000	3.92×10^4	29.4	2	0.55	± 2.0
NEF18W	176 { 18}	18000	7.84×10^4	63.7	2	0.6	± 2.4
NEF25W	245 { 25}	15000	12.7×10^4	78.4	2	0.7	± 2.8
NEF45W	441 { 45}	13000	21.6×10^4	109	2	0.8	± 3.2
NEF80W	784 { 80}	12000	39.2×10^4	153	2	0.9	± 3.6
NEF130W	1270 {130}	10000	73.5×10^4	177	2	1.0	± 5.0
NEF210W	2060 {210}	8000	11.3×10^5	225	2	1.2	± 5.4
NEF340W	3330 {340}	7500	16.2×10^5	235	2	1.3	± 6.6
NEF540W	5290 {540}	3400	21.4×10^5	274	2	1.4	± 7.6
NEF700W	6860 {700}	3100	29.1×10^5	294	2	1.8	± 8.0

NEH spacer type

Model No.	Allowable torque [N·m{kgf·m}]	Maximum rotation speed [r/min]	Torsional stiffness [N·m/rad]	Shaft-direction spring constant [N/mm]	Allowable misalignment		
					Angular misalignment [deg]	Parallel misalignment [mm]	End play [mm]
NEH09W	8820{ 900}	5000	51.9×10^5	627	1.4	1.6	± 3.2
NEH14W	13700{ 1400}	4700	84.3×10^5	1380	1	1.1	± 2.1
NEH20W	19600{ 2000}	4300	12.7×10^6	1370	1	1.3	± 2.4
NEH30W	29400{ 3000}	3900	20.6×10^6	1700	1	1.4	± 2.8
NEH41W	40200{ 4100}	3700	25.5×10^6	1880	1	1.7	± 2.8
NEH55W	53900{ 5500}	3600	35.3×10^6	2087	1	2.0	± 3.6
NEH70W	68600{ 7000}	3400	44.7×10^6	1920	1	2.2	± 3.8
NEH90W	88200{ 9000}	3100	58.2×10^6	2078	1	2.2	± 4.3
NEH110W	108000{11000}	2900	73.8×10^6	2038	1	2.2	± 4.8
NEH135W	132000{13500}	2700	94.6×10^6	2254	1	2.4	± 5.0
NEH150W	147000{15000}	2500	10.0×10^7	2450	1	2.6	± 5.6
NEH180W	176000{18000}	2400	12.2×10^9	2666	1	2.8	± 5.7

Notes 1. The maximum rotation speed is determined by the coupling's transmission capacity. Balance adjustment has not been performed. Contact Tsubaki if you need to perform balance adjustment for high-speed use.
2. The allowable misalignment values shown are the values applicable when the other two misalignment values are each 0.

NEF long spacer type

Model No.	Allowable torque [N·m]	Maximum rotation speed [r/min]	Torsional stiffness specifications			E [mm]	Shaft-direction spring constant [N/mm]	Allowable misalignment		
			J_1	K_1	K_2			Angular misalignment θ [deg]	Parallel misalignment [mm]	End play [mm]
NEF04W	39.2	See the table on page 42.	63	0.0949	32.0	6.1	20.6	2	$(J-E)\times\tan\frac{1}{2}\theta$	± 1.6
NEF10W	98		64	0.0857	22.2	6.6	29.4	2		± 2.0
NEF18W	176		74	0.1152	22.5	8.3	63.7	2		± 2.4
NEF25W	245		89.4	0.0856	19.2	11.2	78.4	2		± 2.8
NEF45W	441		105.6	0.0656	20.0	11.7	109	2		± 3.2
NEF80W	784		119	0.0579	20.0	11.7	153	2		± 3.6
NEF130W	1270		148	0.0436	17.3	16.8	177	2		± 5.0
NEF210W	2060		161	0.0413	18.3	17	225	2		± 5.4
NEF340W	3330		195.6	0.0434	20.6	21.6	235	2		± 6.6
NEF540W	5290		225.6	0.0276	49.5	23.9	274	2		± 7.6
NEF700W	6860		257.6	0.0286	47.1	27.2	294	2		± 8.0

NEH long spacer type

Model No.	Allowable torque [N·m]	Maximum rotation speed [r/min]	Torsional stiffness specifications			E [mm]	Shaft-direction spring constant [N/mm]	Allowable misalignment		
			J_1	K_1	K_2			Angular misalignment θ [deg]	Parallel misalignment [mm]	End play [mm]
NEH09W	8820	See the table on page 42.	258	0.0360	17.0	19	627	1.4	$(J-E)\times\tan\frac{1}{2}\theta$	± 3.2
NEH14W	13700		292	0.0560	16.3	19	1380	1		± 2.1
NEH20W	19600		330	0.0374	15.4	19	1370	1		± 2.4
NEH30W	29400		373	0.0374	14.3	21.5	1700	1		± 2.8
NEH41W	40200		390	0.0354	15.8	24	1880	1		± 2.8

J and *E* in the tables indicate the part dimensions in the diagram below.

Formula for calculating long spacer type torsional stiffness

Formula: $$\frac{T\times10^4}{(J-J_1)\times K_1+K_2}\quad[\mathrm{N\cdot m/rad}]$$

J : *J* dimension (distance between hub faces) in external diagram [mm]

T : Transmission capacity allowable torque [N·m]

The constants in the tables above are used for J_1, K_1 and K_2.

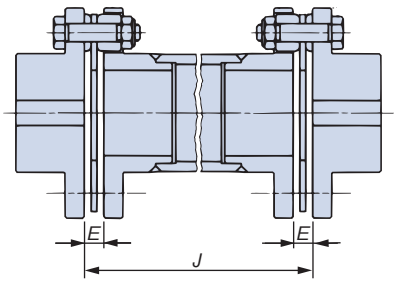

Notes 1. The maximum rotation speed is determined by the coupling's transmission capacity. Balance adjustment has not been performed. Contact Tsubaki if you need to perform balance adjustment for high-speed use.
2. The allowable misalignment values shown are the values applicable when the other two misalignment values are each 0.

NEF single type

Transmission capacity/Dimensions

Standard hub × Standard hub

NEF □□ S - N □□ X N □□

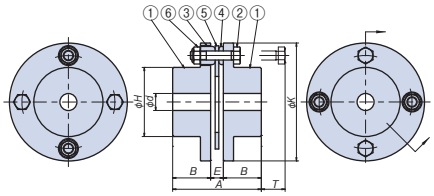

(1) Standard hubs (2) Reamer bolt
(3) Washer (A)
(4) Washer (B) (5) Disk (6) U-nut

Enlarged hub × Enlarged hub

NEF □□ S - K □□ X K □□

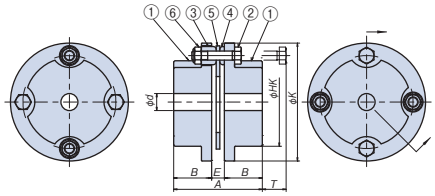

(1) Enlarged hubs (2) Reamer bolt
(3) Washer (A)
(4) Washer (B) (5) Disk (6) U-nut

Extended hub × Extended hub

NEF □□ S - L □□ X L □□

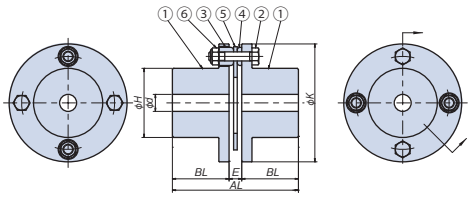

(1) Extended hubs (2) Reamer bolt
(3) Washer (A)
(4) Washer (B) (5) Disk (6) U-nut

Unit : [mm]

Model No.	Allowable torque [N·m{kgf·m}]	Maximum rotation speed [r/min]	Pilot bore diameter d	Keyway bore diameter range N: Standard hubs L : Extended hub	Keyway bore diameter range K : Enlarged hub	Torsional stiffness [N·m/rad]	Shaft-direction spring constant [N/mm]	Allowable misalignment Angular misalignment [deg]	Allowable misalignment End play [mm]
NEF02S	19.6{ 2}	20000	8	ϕ 9 to 20	ϕ 21 to 25	1.96×10^4	68.6	1	± 0.8
NEF04S	39.2{ 4}	20000	8	ϕ 9 to 23	ϕ 24 to 29	2.45×10^4	40.2	1	± 0.8
NEF10S	98 { 10}	20000	10	ϕ 11 to 32	ϕ 33 to 40	8.82×10^4	58.8	1	± 1.0
NEF18S	176 { 18}	18000	12	ϕ 14 to 35	ϕ 36 to 42	15.7×10^4	127	1	± 1.2
NEF25S	245 { 25}	15000	15	ϕ 16 to 42	ϕ 43 to 48	25.5×10^4	157	1	± 1.4
NEF45S	441 { 45}	13000	15	ϕ 16 to 50	ϕ 51 to 60	44.1×10^4	219	1	± 1.6
NEF80S	784 { 80}	12000	15	ϕ 17 to 60	ϕ 61 to 70	78.4×10^4	307	1	± 1.8
NEF130S	1270 {130}	10000	25	ϕ 28 to 74	ϕ 75 to 80	14.7×10^5	355	1	± 2.5
NEF210S	2060 {210}	8000	25	ϕ 28 to 83	ϕ 84 to 90	22.5×10^5	441	1	± 2.7
NEF340S	3330 {340}	7500	45	ϕ 46 to 95	ϕ 96 to 110	32.3×10^5	470	1	± 3.3
NEF540S	5290 {540}	3400	50	ϕ 52 to 109	ϕ 110 to 120	43.1×10^5	549	1	± 3.8
NEF700S	6860 {700}	3100	50	ϕ 52 to 118	ϕ 119 to 130	58.8×10^5	588	1	± 4.0

Model No.	A	AL Extended hub	B	BL Extended hub	E	ϕ H	ϕ HK Enlarged hub	ϕ K	T	Weight [kg]	Moment of inertia [kg·m²]
NEF02S	44.9	—	20	—	4.9	32	45	57	11	0.33	1.23×10^{-4}
NEF04S	56.9	86.1	25.4	40	6.1	34	50	67.5	15.5	0.6	2×10^{-4}
NEF10S	57.4	86.6	25.4	40	6.6	46	66	81	16	0.8	6×10^{-4}
NEF18S	65.7	98.3	28.7	45	8.3	51	66	93	23	1.3	13×10^{-4}
NEF25S	78.2	111.2	33.5	50	11.2	61	78	104	21	1.8	22×10^{-4}
NEF45S	93.9	131.7	41.1	60	11.7	71	92	126	23	3.2	56×10^{-4}
NEF80S	107.3	151.7	47.8	70	11.7	84	104	143	29.5	4.9	110×10^{-4}
NEF130S	131.2	186.8	57.2	85	16.8	106	129	168	20	7.8	270×10^{-4}
NEF210S	144	257	63.5	120	17	118	147	194	32.5	11.7	520×10^{-4}
NEF340S	174	301.6	76.2	140	21.6	137	166	214	19.5	16.4	880×10^{-4}
NEF540S	201.7	303.9	88.9	140	23.9	156	191	246	24.5	25.1	1750×10^{-4}
NEF700S	230.4	327.2	101.6	150	27.2	169	209	276	40	37	3250×10^{-4}

Note: 1. See page 38 for the enlarged hub/extended hub dimensions. For long hubs, the overall length will be extended for as much as dimension B is lengthened.
2. All sizes are stock products.
3. The maximum rotation speed is determined by the coupling's transmission capacity. Balance adjustment has not been performed. Contact Tsubaki if you need to perform balance adjustment for high-speed use.
4. Weight and moment of inertia values apply to standard hubs with maximum bore diameters (keyways). For enlarged hubs/extended hubs, add the values on page 38.
5. End play value is based on zero angular misalignment.
6. Check the key contact pressure in line with your operation conditions by referring to page 38. Hubs are made of S45C.

Model Number

NEF18 S - N H 30 E D2 X K H 40 J D2

Single type | Hub type | Bore tolerance | Bore diameter | Keyway tolerance | Set screw position

See page 29 for details.

Increases in weight/moment of inertia per single enlarged hub/extended hub

Model No.	Enlarged hub		Extended hub	
	Weight [kg]	Moment of inertia [kg·m²]	Weight [kg]	Moment of inertia [kg·m²]
NEF02S	0.027	0.18×10^{-4}	—	—
NEF04S	0.046	0.34×10^{-4}	0.056	0.12×10^{-4}
NEF10S	0.15	1.3×10^{-4}	0.20	0.77×10^{-4}
NEF18S	0.042	1.1×10^{-4}	0.14	0.67×10^{-4}
NEF25S	0.13	3.0×10^{-4}	0.20	1.3×10^{-4}
NEF45S	0.14	5.8×10^{-4}	0.30	2.8×10^{-4}
NEF80S	0.16	11×10^{-4}	0.47	6.4×10^{-4}
NEF130S	0.67	36×10^{-4}	0.99	20×10^{-4}
NEF210S	1.03	73×10^{-4}	2.45	64×10^{-4}
NEF340S	0.9	118×10^{-4}	3.85	132×10^{-4}
NEF540S	2.31	273×10^{-4}	3.91	178×10^{-4}
NEF700S	2.91	431×10^{-4}	4.41	236×10^{-4}

Notes 1. See the table below for the enlarged hub/extended hub dimensions.
2. See page 34 for product stock information.
3. Weight and moment of inertia values apply to standard hubs with maximum bore diameters.
For enlarged hubs/extended hubs, add the values in the table above.
4. Check the key contact pressure in line with your operation conditions.
Hubs are made of S45C.

● Reference: Key contact pressure calculation

$$P = \frac{2000 \times T}{D \times t \times B} \quad [N/mm^2]$$

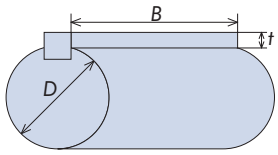

T = Operation torque [N·m]
D = Bore diameter [mm]
t = Key height [mm]
B = Effective key length [mm]

NEF Series hub dimensions

Enlarged hubs If the transmission capacity has sufficient leeway but the shaft diameter exceeds the maximum bore diameter of a standard hub, there is no need to use a larger size model if you use an enlarged hub with a larger boss diameter (Ø*H*).

Extended hubs If the key contact pressure is too high when using standard hubs, it can be lowered by using extended hubs with an extended hub length (*B*).

Square hubs A type used by combining an EL Series Power-Lock with a pressure flange set. Taps for pressure bolts are provided.

Standard hub/extended hub

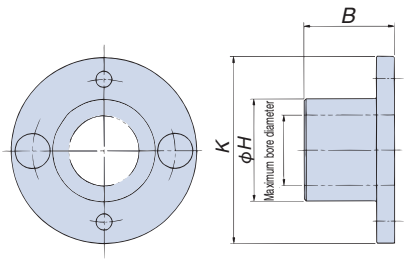

Enlarged hub

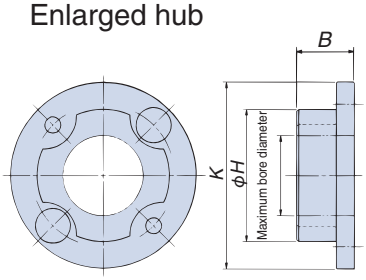

Square hub

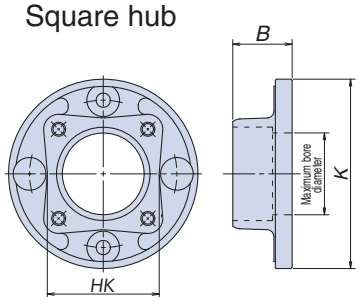

Unit: [mm]

Model No.	ϕ K	B			ϕ H		HK	Pilot bore d
		Standard hubs Enlarged hubs	Extended hubs	Square hubs	Standard hubs Extended hubs	Enlarged hubs	Square hubs	
NEF02	57	20	–	–	32	45	–	8
NEF04	67.5	25.4	40	–	34	50	–	8
NEF10	81	25.4	40	25.4	46	66	47	10
NEF18	93	28.7	45	28.7	51	66	49	12
NEF25	104	33.5	50	33.5	61	78	60	15
NEF45	126	41.1	60	–	71	92	–	15
NEF80	143	47.8	70	–	84	104	–	15
NEF130	168	57.2	85	–	106	129	–	25
NEF210	194	63.5	120	–	118	147	–	25
NEF340	214	76.2	140	–	137	166	–	45
NEF540	246	88.9	140	–	156	191	–	50
NEF700	276	101.6	150	–	169	209	–	50

Note: See the page containing the coupling method description for the bore diameter range.

NEF spacer type

Transmission capacity/Dimensions

NEF02W - N □□ X N □□

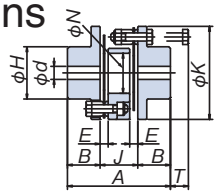

Note: The spacer shape is different from the shape for other sizes. Standard hubs and enlarged hubs are kept in stock. Inquire for information on extended hubs.

Standard hub × Standard hub
NEF □□ W - N □□ X N □□

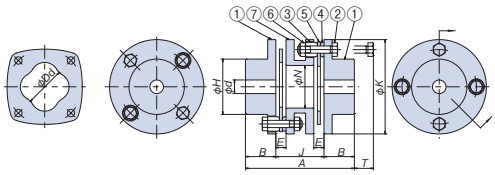

(1) Standard hubs (2) Reamer bolt (3) Washer (A)
(4) Washer (B) (5) Disk (6) U-nut (7) Spacer

Enlarged hub × Enlarged hub
NEF □□ W - K □□ X K □□

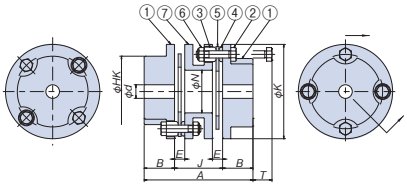

(1) Enlarged hubs (2) Reamer bolt (3) Washer (A)
(4) Washer (B) (5) Disk (6) U-nut (7) Spacer

Extended hub × Extended hub
NEF □□ W - L □□ X L □□

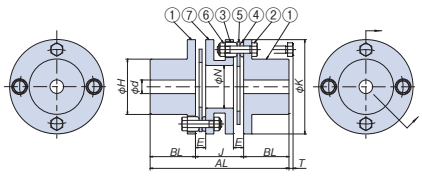

(1) Extended hubs (2) Reamer bolt (3) Washer (A)
(4) Washer (B) (5) Disk (6) U-nut (7) Spacer

Unit : [mm]

Model No.	Allowable torque [N·m{kgf·m}]	Maximum rotation speed [r/min]	Pilot bore diameter d	Keyway bore diameter range N:Standard hubs L :Extended hub	Keyway bore diameter range K :Enlarged hub	Torsional stiffness [N·m/rad]	Shaft-direction spring constant [N/mm]	Allowable misalignment: Angular misalignment [deg]	Allowable misalignment: End play [mm]	Allowable misalignment: Parallel misalignment [mm]
NEF02W	19.6{ 2}	20000	8	φ 9 to 20	φ 21 to 25	1.00×10^4	34.3	2	± 1.6	0.3
NEF04W	39.2{ 4}	20000	8	φ 9 to 23	φ 24 to 29	1.18×10^4	20.6	2	± 1.6	0.5
NEF10W	98 { 10}	20000	10	φ 11 to 32	φ 33 to 40	3.92×10^4	29.4	2	± 2.0	0.55
NEF18W	176 { 18}	18000	12	φ 14 to 35	φ 36 to 42	7.84×10^4	63.7	2	± 2.4	0.6
NEF25W	245 { 25}	15000	15	φ 16 to 42	φ 43 to 48	12.7×10^4	78.4	2	± 2.8	0.7
NEF45W	441 { 45}	13000	15	φ 16 to 50	φ 51 to 60	21.6×10^4	109	2	± 3.2	0.8
NEF80W	784 { 80}	12000	15	φ 17 to 60	φ 61 to 70	39.2×10^4	153	2	± 3.6	0.9
NEF130W	1270 {130}	10000	25	φ 28 to 74	φ 75 to 80	73.5×10^4	177	2	± 5.0	1
NEF210W	2060 {210}	8000	25	φ 28 to 83	φ 84 to 90	11.3×10^5	225	2	± 5.4	1.2
NEF340W	3330 {340}	7500	45	φ 46 to 95	φ 96 to 110	16.2×10^5	235	2	± 6.6	1.3
NEF540W	5290 {540}	3400	50	φ 52 to 109	φ 110 to 120	21.4×10^5	274	2	± 7.6	1.4
NEF700W	6860 {700}	3100	50	φ 52 to 118	φ 119 to 130	29.1×10^5	294	2	± 8.0	1.8

Model No.	A	AL Extended hub	B	BL Extended hub	E	φ H	φ HK Enlarged hub	J	φ K	T	φ N	φ Dd	Weight [kg]	Moment of inertia [kg·m²]
NEF02W	63	—	20	—	4.9	32	45	23	57	11	24	21	0.45	1.66×10^{-4}
NEF04W	86.8	116	25.4	40	6.1	34	50	36	67.5	15.5	25	29	0.95	5.3×10^{-4}
NEF10W	89.8	119	25.4	40	6.6	46	66	39	81	16	37	37	1.4	12×10^{-4}
NEF18W	104.4	137	28.7	45	8.3	51	66	47	93	23	38	39	2.3	25×10^{-4}
NEF25W	120	153	33.5	50	11.2	61	78	53	104	21	47	45	3	41×10^{-4}
NEF45W	144.2	182	41.1	60	11.7	71	92	62	126	23	58	51	5.4	110×10^{-4}
NEF80W	164.6	209	47.8	70	11.7	84	104	69	143	29.5	71	61	8.2	200×10^{-4}
NEF130W	192.4	248	57.2	85	16.8	106	129	78	168	20	92	73	12.2	447×10^{-4}
NEF210W	216	329	63.5	120	17	118	147	89	194	32.5	103	84	18.9	931×10^{-4}
NEF340W	249.4	377	76.2	140	21.6	137	166	97	214	19.5	118	97	25.1	1478×10^{-4}
NEF540W	286.8	389	88.9	140	23.9	156	191	109	246	24.5	135	110	38.6	3014×10^{-4}
NEF700W	337.2	434	101.6	150	27.2	169	209	134	276	40	146	120	60	5972×10^{-4}

Notes 1. See page 38 for the enlarged hub/extended hub dimensions.
2. Weight and moment of inertia values apply to standard hubs with maximum bore diameters. For enlarged hubs/extended hubs, add the values on page 38.
3. Spacers can also be manufactured in nonstandard lengths. See the long spacer information on page 41.

Model Number

NEF700 W - N H 70 E D2 X K H 120 J D2

See page 29 for details.

NEH large spacer type

Transmission capacity/Dimensions

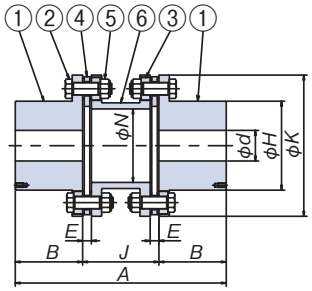

(1) Hubs
(2) Reamer bolt
(3) Overload washer
(4) Disk set
(5) U-nut
(6) Spacer

Six bolts (NEH09)

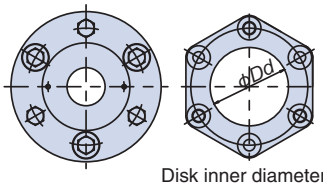

Disk inner diameter

Eight bolts (NEH14 to NEH180)

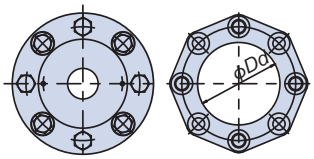

Disk inner diameter

Unit : [mm]

Model No.	Allowable torque [N·m{kgf·m}]	Maximum rotation speed [r/min]	Pilot bore diameter d	Keyway bore diameter range [φ]	Torsional stiffness [N·m/rad{kgf·m/rad}]	Shaft-direction spring constant [N/mm{kgf/mm}]	Allowable misalignment		
							Angular misalignment [deg]	End play [mm]	Parallel misalignment [mm]
NEH09W	8820{ 900}	5000	70	111	51.9×10^5{ 5.3×10^5}	627{ 64}	1.4	± 3.2	1.6
NEH14W	13700{ 1400}	4700	70	111	84.3×10^5{ 8.6×10^5}	1380{141}	1	± 2.1	1.1
NEH20W	19600{ 2000}	4300	75	133	12.7×10^6{ 1.3×10^6}	1370{140}	1	± 2.4	1.3
NEH30W	29400{ 3000}	3900	75	152	20.6×10^6{ 2.1×10^6}	1700{183}	1	± 2.8	1.4
NEH41W	40200{ 4100}	3700	120	165	25.5×10^6{ 2.6×10^6}	1880{192}	1	± 2.8	1.7
NEH55W	53900{ 5500}	3600	130	187	35.3×10^6{ 3.6×10^6}	2087{213}	1	± 3.6	2.0
NEH70W	68600{ 7000}	3400	110	205	44.7×10^6{ 4.6×10^6}	1920{196}	1	± 3.8	2.1
NEH90W	88200{ 9000}	3100	120	231	58.2×10^6{ 5.9×10^6}	2078{212}	1	± 4.3	2.2
NEH110W	108000{11000}	2900	190	254	73.8×10^6{ 7.5×10^6}	2038{208}	1	± 4.8	2.2
NEH135W	132000{13500}	2700	140	263	94.6×10^6{ 9.7×10^6}	2254{230}	1	± 5.0	2.4
NEH150W	147000{15000}	2500	150	275	10.0×10^7{ 10.2×10^6}	2450{250}	1	± 5.6	2.6
NEH180W	176000{18000}	2400	160	289	12.2×10^9{ 12.4×10^6}	2666{272}	1	± 5.7	2.8

Model No.	A	B	E	φ H	J	φ K	φ Dd	φ N	Weight [kg]	Moment of inertia [kg·m²]
NEH09W	375	110	19.0	161	155	276	144	138	55	5000
NEH14W	409	127	19.0	161	155	276	155	132	61	5500
NEH20W	463	146	19.0	193	171	308	178	160	85	10300
NEH30W	517	165	21.5	218	187	346	201	180	125	18500
NEH41W	566	171	24.0	240	224	375	218	198	172	29300
NEH55W	720	225	29.5	272	270	445	252	228	293	64800
NEH70W	768	247	31.3	297	274	470	275	249	344	90800
NEH90W	843	278	32.0	334	287	511	304	280	456	144000
NEH110W	902	305	32.5	364	292	556	343	296	575	215000
NEH135W	945	317	34.0	382	311	587	350	312	696	290000
NEH150W	1005	331	34.5	399	343	629	368	325	826	390000
NEH180W	1050	347	35.5	419	356	654	380	340	954	506000

Notes 1. All sizes are made-to-order products.
2. The maximum rotation speed is determined by the coupling's transmission capacity. Balance adjustment has not been performed. Contact Tsubaki if you need to perform balance adjustment for high-speed use.
3. Weight and moment of inertia values apply to maximum bore diameters (keyway).
4. Spacers can also be manufactured in nonstandard lengths. See the long spacer information on page 41.
5. End play value is based on zero angular misalignment.
6. Check the key contact pressure in line with your operation conditions by referring to page 38. Hubs are made of S45C.

Model Number

NEH14 W - N H 100 J D2 X A H 120 J D2

Spacer type | Hub type | Bore tolerance | Bore diameter | Keyway tolerance | Set screw position

See page 31 for details.

Long spacer type

Transmission capacity/Dimensions

This type can be used with a floating shaft when the distance between shafts is large.
It tolerates significant parallel misalignment depending on the distance.
Suitable for line shaft drive with miter gear boxes.

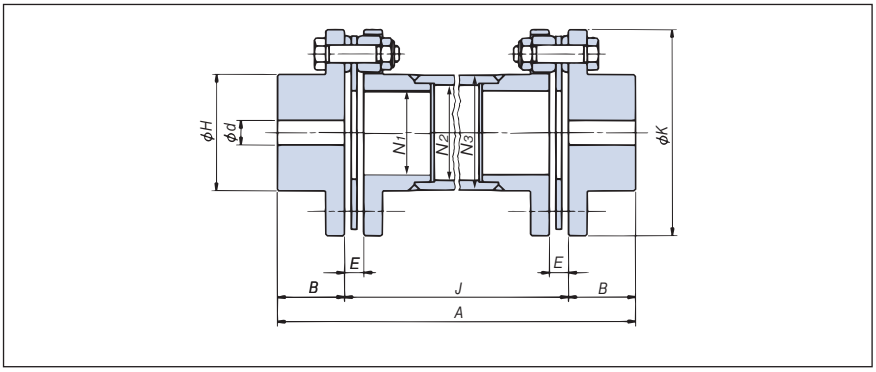

Unit : [mm]

Model No.	Allowable torque [N·m{kgf·m}]	Pilot bore diameter d	Maximum rotation speed	B	Dd	E	φH	φK	N_1	N_2	N_3	A	J	Allowable misalignment: Angular misalignment [deg]	Allowable misalignment: End play [mm]	Allowable misalignment: Parallel misalignment [mm]
NEF04W	39.2{ 4}	8	23	25.4	29	6.1	34	67.5	17	27	32	2B+J	Desired length (Max6000)	2	± 1.6	(J − E) × sin1/2θ
NEF10W	98 { 10}	10	32	25.4	37	6.6	46	81	26	36	42			2	± 2.0	
NEF18W	176 { 18}	12	35	28.7	39	8.3	51	93	30	40	46			2	± 2.4	
NEF25W	245 { 25}	15	42	33.5	45	11.2	61	104	38	50	56			2	± 2.8	
NEF45W	441 { 45}	15	50	41.1	51	11.7	71	126	48	60	68			2	± 3.2	
NEF80W	784 { 80}	15	60	47.8	61	11.7	84	143	60	70	80			2	± 3.6	
NEF130W	1270 { 130}	25	74	57.2	73	16.8	106	168	76	92	102			2	± 5.0	
NEF210W	2060 { 210}	25	83	63.5	84	17	118	194	88	103	115			2	± 5.4	
NEF340W	3330 { 340}	45	95	76.2	97	21.6	137	214	106	120	132			2	± 6.6	
NEF540W	5290 { 540}	50	109	88.9	110	23.9	156	246	125	134	154			2	± 7.6	
NEF700W	6860 { 700}	50	118	101.6	120	27.2	169	276	136	145.2	165.2			2	± 8.0	
NEH09W	8820 { 900}	70	111	110	144	19	161	276	127	135	159			1.4	± 3.2	
NEH14W	13700 { 1400}	70	111	127	155	19	161	276	127	135	159			1	± 2.1	
NEH20W	19600 { 2000}	75	133	146	178	19	193	308	150	160.7	190.7			1	± 2.4	
NEH30W	29400 { 3000}	75	152	165	201	21.5	218	346	175	186.3	216.3			1	± 2.8	
NEH41W	40200 { 4100}	120	165	171	218	24	240	375	187	196	232			1	± 2.8	
NEH55W	53900 { 5500}	130	187	225	252	29.5	272	445	207	227.4	267.4		Desired length (Max4000)	1	± 3.6	
NEH70W	68600 { 7000}	110	205	247	275	31.3	297	470	209	230	280			1	± 3.8	
NEH90W	88200 { 9000}	120	231	278	304	32	334	511	247	273.9	323.9			1	± 4.3	
NEH110W	108000 {11000}	190	254	305	343	32.5	364	556	277	305.6	355.6			1	± 4.8	
NEH135W	132000 {13500}	140	263	317	350	34	382	587	304	331	381			1	± 5.0	
NEH150W	147000 {15000}	150	275	331	368	34.5	399	629	304	331	381			1	± 5.6	
NEH180W	176000 {18000}	160	289	347	380	35.5	419	654	319	344.6	406.4			1	± 5.7	

Notes 1. All sizes are made-to-order products.
2. Specify the *J* dimension when ordering.
3. Balance adjustment may be needed for high-speed use or a particularly long *J* dimension. A hazard speed check is also required. See the long spacer type rotation limit table on page 42.
4. Check the key contact pressure in line with your operation conditions by referring to page 38. Hubs are made of S45C.

Vertical long spacer type

For vertical use, a thrust supporter is needed as shown in the figure to the right if the *J* dimension exceeds the value listed in the table below for the desired size.

Model No.	*J* dimension
NEF04W	319
NEF10W	408
NEF18W	1171
NEF25W	1429
NEF45W	1386
NEF80W	1505

Model No.	*J* dimension
NEF130W	1910
NEF210W	1924
NEF340W	2143
NEF540W	1542
NEF700W	1463

Model No.	*J* dimension
NEH09W	1153
NEH14W	1767
NEH20W	1277
NEH30W	1742
NEH41W	1355

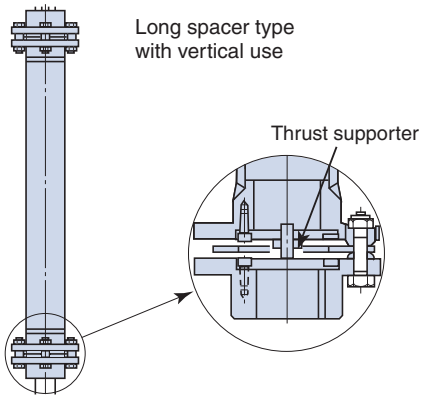

Formula for calculating long spacer type torsional stiffness

Use the following formula to calculate the long spacer type torsional stiffness.

$$\frac{T \times 10^4}{(J - J_1) \cdot K_1 + K_2}$$

N·m/rad
{kgf·m/rad}

Model No.	J_1	K_1	K_2
NEF04W	63	0.0949	32
NEF10W	64	0.0857	22.2
NEF18W	74	0.1152	22.5
NEF25W	89.4	0.0856	19.2
NEF45W	105.6	0.0656	20
NEF80W	119	0.0579	20
NEF130W	148	0.0436	17.3
NEF210W	161	0.0413	18.3
NEF340W	195.6	0.0434	20.6
NEF540W	225.6	0.0276	49.5
NEF700W	257.6	0.0286	47.1
NEH09W	258	0.036	17
NEH14W	292	0.056	16.3
NEH20W	330	0.0374	15.4
NEH30W	373	0.0374	14.3
NEH41W	390	0.0354	15.8

J : *J* dimension (distance between hub faces) in external diagram [mm]
T : Transmission capacity allowable torque [N·m{kgf·m}]
The constants in the tables above are used for J_1, K_1 and K_2.

Approximate weight and moment of inertia of long spacer type (GD^2 formula)

Model No.	Weight specifications			Moment of inertia (GD^2) specifications			
	W_1	W_2	J_1	G_1	d_1	G_2	d_2
NEF04W	0.02	1.2	6.3	23	8.8	6	2.19
NEF10W	0.03	1.5	6.4	48	15.3	12	3.83
NEF18W	0.03	2.7	7.4	105	18.6	26	4.65
NEF25W	0.04	3.5	8.9	173	28.2	43	7.05
NEF45W	0.06	6.3	10.6	459	41.1	115	10.28
NEF80W	0.09	9.6	11.9	936	56.5	234	14.13
NEF130W	0.12	15.4	14.8	1948	94.3	487	23.59
NEF210W	0.16	22.5	16.1	4006	119.2	1001	29.79
NEF340W	0.19	29.9	19.6	6475	159.1	1619	39.78
NEF540W	0.36	46.1	22.6	13185	208.4	3246	52.09
NEF700W	0.38	69.5	25.8	25423	241.9	6356	60.47
NEH09W	0.44	64.1	25.8	22311	217.5	5578	54.38
NEH14W	0.44	72.4	29.2	25117	217.5	6279	54.38
NEH20W	0.65	110.7	33	49157	311.0	12289	77.74
NEH30W	0.75	150.9	37.3	85693	407.5	21423	101.87
NEH41W	0.95	197.9	39	132760	461.2	33190	115.3

The weight of a long spacer type is calculated using the following formula (when using the maximum bore diameter):

Unit: kg

$$\text{Weight} = W_1 (J - J_1) + W_2$$

J: *J* dimension (distance between hub faces): mm
The constants in the tables above are used for J_1, W_1, W_2, d_1, d_2, G_1, and G_2.

GD^2 and the moment of inertia are calculated using the following formula (when using the maximum bore diameter):

$$GD^2 = W_1 \times d_1 (J - J_1) + G_1$$

Unit: kgf · cm²

$$\text{Moment of inertia} = W_1 \times d_2 (J - J_1) + G_2$$

Unit: kg · cm²

* This formula is used when the *J* dimension exceeds J_1 (Unit: cm).

Long spacer type rotation limit

When long spacer types are used at high speeds, the rotation speed needs to be checked to avoid the resonance point.
When selecting long spacer types, check each model number's *J* dimension and whether its rotation speed is within the limit.
If the operating rotation speed exceeds the value shown below, a higher model number must be selected.

Long spacer length (J dimension) limits

Model No.	Operating rotation speed [r/min]														
	3600	2000	1800	1500	1200	1000	900	750	720	600	500	400	300	200	150
NEF04W	980	1310	1380	1510	1680	1840	1940	2130	2170	2380	2610	2910	3360	4120	4750
NEF10W	1120	1500	1580	1730	1940	2120	2230	2450	2500	2730	2990	3350	3860	4730	5460
NEF18W	1180	1580	1660	1820	2040	2230	2350	2570	2620	2870	3150	3520	4060	4970	5740
NEF25W	1310	1760	1850	2030	2260	2480	2610	2860	2920	3190	3500	3910	4510	5520	
NEF45W	1440	1930	2030	2230	2490	2720	2870	3140	3210	3510	3840	4290	4960		
NEF80W	1560	2090	2200	2410	2690	2950	3100	3400	3470	3800	4160	4650	5360		
NEF130W	1780	3280	2510	2750	3070	3360	3540	3870	3950	4330	4740	5290			
NEF210W	1890	2520	2660	2910	3250	3560	3750	4100	4190	4580	5020	5610			
NEF340W	2024	2720	2870	3130	3500	3830	4040	4420	4510	4930	5400				
NEF540W	2180	2910	3070	3360	3750	4100	4320	4730	4820	5280	5780				
NEF700W	2270	3030	3190	3490	3890	4260	4490	4910	5010	5490					
NEH09W	2190	2930	3090	3380	3780	4130	4360	4770	4870	5330	5830				
NEH14W	2190	2930	3090	3380	3780	4130	4360	4770	4870	5330	5830				
NEH20W	2400	3200	3380	3690	4130	4520	4760	5210	5320	5820					
NEH30W	2570	3430	3610	3960	4420	4840	5100	5580	5690						
NEH41W	2650	3540	3730	4080	4560	4990	5260	5760	5870						

Long spacer high-speed type

A larger coupling size can be selected as a way to avoid a dangerous RPM range. When use of a larger size is not possible, the same effect can be achieved by increasing the spacer weight. Please contact us.

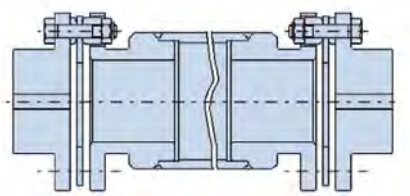

Model Number

NEF25 W - N H 35 J D2 V X N H 40 J D2 - J 1000

Indicates bore diameter at ground (bottom) side in vertical long spacer type.

Long spacer

Inter-flange distance

Standard-dimension long spacer type

Dimensions

Long spacer products of specific dimensions are standardized.
The JS type is a balanced design equivalent to G6.3 (1,800 r/min).

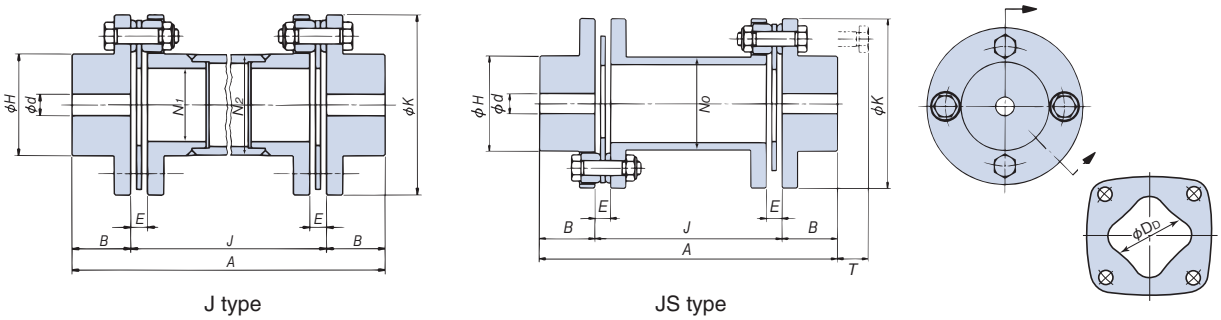

J type　　JS type

Unit : [mm]

Model No.	Type	Long spacer	Pilot bore diameter d	A	B	φ D_D	E	φ H	φ K	N_0	N_1	N_2	T
NEF04W	J	200,250,300,350, 400,450,500,600, 700,800,900,1000	8	2B+J	25.4	29	6.1	34	67.5	–	17	32	15.5
NEF10W	JS	100,140	10		25.4	37	6.6	46	81	46	–	–	16
	J	200,250,300,350, 400,450,500,600, 700,800,900,1000								–	26	42	
NEF18W	JS	100,140	12		28.7	39	8.3	51	93	48	–	–	23
	J	200,250,300,350, 400,450,500,600, 700,800,900,1000								–	30	46	
NEF25W	JS	100,127,140	15		33.5	45	11.2	61	104	58	–	–	21
	J	200,250,300,350, 400,450,500,600, 700,800,900,1000								–	38	56	
NEF45W	JS	100,127,140, 180,200,250	15		41.1	51	11.7	71	126	69	–	–	23
NEF80W	JS	127,140,180, 200,250	15		47.8	61	11.7	84	143	81	–	–	29.5
NEF130W	JS	127,140,180, 200,250	25		57.2	73	16.8	106	168	102	–	–	20
NEF210W	JS	140,180,200	25		63.5	84	17	118	194	114	–	–	32.5
NEF340W	JS	180,200	45		76.2	97	21.6	137	214	132	–	–	19.5

Note: See the page containing the coupling method description for the bore diameter range.

Using standard-size long spacers

The methods below can be used when standard-size long spacer products cannot be made to fit the equipment.

(1) When desired long spacer length is slightly longer than stock products

⇩

Use extended hubs for both hubs.

(2) Slightly shorter

⇩

Have both shafts project out from hubs.
Depending on the shaft diameter, there may be interference with the disks or spacers, so check the dimensions.

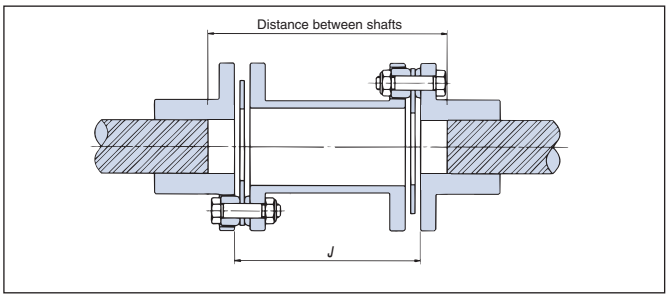

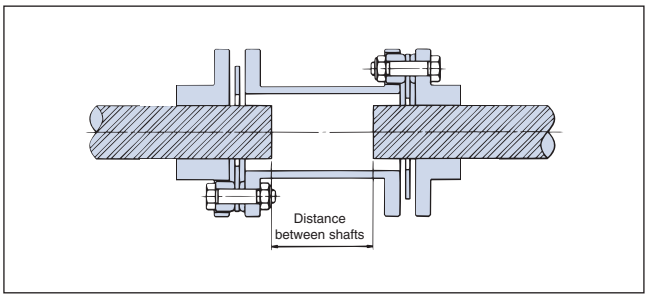

Single-plate spacers

Dimensions

A spacer type with a shorter distance between hub faces (J dimension), suitable for use when the distance between shaft ends is short or when a short overall length is required.

(1) Hubs
(2) Reamer bolt
(3) Washer (A)
(4) Washer (B)
(5) Disk
(6) U-nut
(7) Single-plate spacer

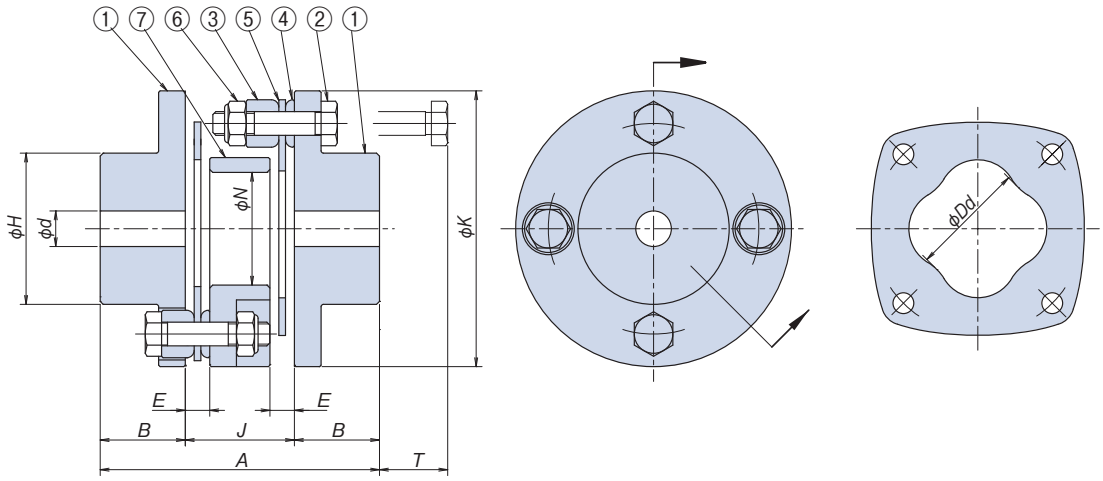

Unit : [mm]

Model No.	Pilot bore diameter d	A	B	E	φ H	J	φ K	φ Dd	φ N	T	Weight [kg]	Moment of inertia [kg·m²]
NEF04W	8	79	25.4	6.1	34	28.2	67.5	29	25	15.5	0.82	4.7×10^{-4}
NEF10W	10	79.6	25.4	6.6	46	28.8	81	37	36	16	1.18	1.0×10^{-4}
NEF18W	12	94.3	28.7	8.3	51	36.9	93	39	38	23	1.93	22×10^{-4}
NEF25W	15	107.2	33.5	11.2	61	40.2	104	45	43	21	2.56	35×10^{-4}
NEF45W	15	128.5	41.1	11.7	71	46.3	126	51	54	23	4.55	91×10^{-4}
NEF80W	15	148.9	47.8	11.7	84	53.3	143	61	65	29.5	7.00	188×10^{-4}
NEF130W	25	174	57.2	16.8	106	59.6	168	73	76	20	10.67	381×10^{-4}
NEF210W	25	197.5	63.5	17	118	70.5	194	84	90	32.5	16.9	825×10^{-4}
NEF340W	45	228.8	76.2	21.6	137	76.4	214	97	90	19.5	22.29	1272×10^{-4}
NEF540W	50	265.8	88.9	23.9	156	88	246	110	100	24.5	34.75	2641×10^{-4}
NEF700W	50	309.2	101.6	27.2	169	106	276	120	110	40	54.24	5174×10^{-4}

Notes 1. See the page containing the coupling method description for the bore diameter range.
2. Weight and moment of inertia values apply to standard hubs with maximum bore diameters (keyways).

Model Number

NEF25 W - N H 35 J D2 X N H 40 E D2 - JT 40.2

JT : Single-plate spacer
JS : Standard-size long spacer

Inter-flange distance

Coupling Methods

List of standard bore diameters

Hubs machined with new JIS normal type bores are available.
See page 33 for details.

Model No.	Hub type	Keyway	Bore diameter [mm]
NEF02	Standard hub	New JIS normal type	12,14,15,16,19,20
	Enlarged hub		25
NEF04	Standard hub		10,11,12,14,15,16,17,18,19,20,22
	Enlarged hub		24,25,28
	Extended hub		15,19,24,25
NEF10	Standard hub		12,14,15,16,17,18,19,20,22,24,25,28,30,32
	Enlarged hub		35
	Extended hub		15,19,24,25
NEF18	Standard hub		14,15,16,17,18,19,20,22,24,25,28,30,32,35
	Enlarged hub		38
	Extended hub		25,32
NEF25	Standard hub		17,18,19,20,22,24,25,28,30,32,33,35,38,40
	Enlarged hub		45,48
	Extended hub		35,38
NEF45	Standard hub		25,28,30,32,35,38,40,42,45,48,50
	Enlarged hub		Bore machining service available
	Extended hub		40
NEF80	Standard hub		30,32,35,38,40,42,45,48,50,55,60
	Enlarged hub		Bore machining service available
	Extended hub		40
NEF130	Standard hub		35,38,40,42,45,48,50,55,60,65,70
	Enlarged hub		Bore machining service available
	Extended hub		Bore machining service available

NEF210 to NEF700 sizes are supported with the bore machining service for all bore diameters.

Bore diameter keyway dimensions

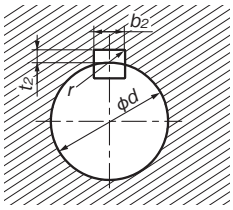

Key	d	b_2 (Js9)	t_2	t_2 tolerance	r
3×3	8 < d ≤ 10	3 ±0.012	1.4	$^{+0.1}_{0}$	0.1
4×4	10 < d ≤ 12	4 ±0.015	1.8	$^{+0.1}_{0}$	0.1
5×5	12 < d ≤ 17	5 ±0.015	2.3	$^{+0.1}_{0}$	0.2
6×6	17 < d ≤ 22	6 ±0.015	2.8	$^{+0.1}_{0}$	0.2
8×7	22 < d ≤ 30	8 ±0.018	3.3	$^{+0.2}_{0}$	0.2
10×8	30 < d ≤ 38	10 ±0.018	3.3	$^{+0.2}_{0}$	0.3
12×8	38 < d ≤ 44	12 ±0.021	3.3	$^{+0.2}_{0}$	0.3
14×9	44 < d ≤ 50	14 ±0.021	3.8	$^{+0.2}_{0}$	0.3
16×10	50 < d ≤ 58	16 ±0.021	4.3	$^{+0.2}_{0}$	0.3
18×11	58 < d ≤ 65	18 ±0.021	4.4	$^{+0.2}_{0}$	0.3
20×12	65 < d ≤ 75	20 ±0.026	4.9	$^{+0.2}_{0}$	0.5
22×14	75 < d ≤ 85	22 ±0.026	5.4	$^{+0.2}_{0}$	0.5
25×14	85 < d ≤ 95	25 ±0.026	5.4	$^{+0.2}_{0}$	0.5
28×16	95 < d ≤ 110	28 ±0.026	6.4	$^{+0.2}_{0}$	0.5
32×18	110 < d ≤ 130	32 ±0.031	7.4	$^{+0.2}_{0}$	0.5
36×20	130 < d ≤ 150	36 ±0.031	8.4	$^{+0.3}_{0}$	0.8
40×22	150 < d ≤ 170	40 ±0.031	9.4	$^{+0.3}_{0}$	0.8
45×25	170 < d ≤ 200	45 ±0.031	10.4	$^{+0.3}_{0}$	0.8
50×28	200 < d ≤ 230	50 ±0.031	11.4	$^{+0.3}_{0}$	0.8
56×32	230 < d ≤ 260	56 ±0.037	12.4	$^{+0.3}_{0}$	1.4
63×32	260 < d ≤ 290	63 ±0.037	12.4	$^{+0.3}_{0}$	1.4

Bore chamfer dimension

Bore diameter	Chamfer dimension
Up to 25 mm	C0.5
Up to 50 mm	C1
51 mm or more	C1.5

Set screw position and size

Standard hub/extended hub type

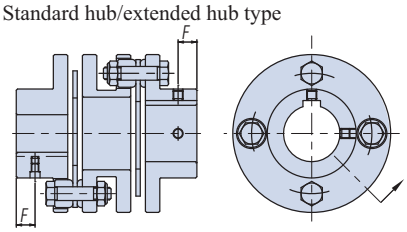

Enlarged hub type

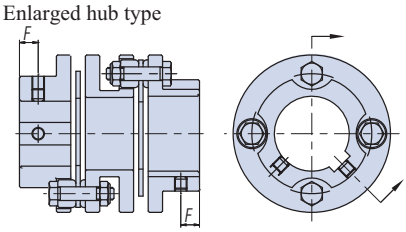

Model No.	F dimension [mm]		Bore diameter [mm]																					
	Standard hub・Enlarged hub	Extended hub	9 to 21	22	23 to 29	30	31	32	33 to 35	36 to 38	39 to 40	41 to 42	43 to 48	49 to 50	51 to 53	54 to 57	58 to 60	61 to 70	71 to 73	74	75	76 to 80	81	82 to 83	84 to 90
NEF02	5	–	M4	M4	M4																				
NEF04	8	15	M4	M4	M4																				
NEF10	8	15	M4	M6	M6	M4	M4	M4	M6	M6	M6														
NEF18	10	15	M4	M6	M6	M6	M6	M4	M4	M6	M6	M6													
NEF25	12	20	M5	M5	M6	M6	M8	M8	M8	M8	M6	M5	M8												
NEF45	15	20	M5	M5	M6	M6	M8	M8	M8	M8	M8	M8	M8	M6	M10	M10	M10								
NEF80	18	25	M6	M6	M6	M6	M8	M8	M8	M8	M8	M10	M10	M10	M10	M8	M6	M10							
NEF130	20	30			M8	M8	M8	M8	M8	M8	M8	M10	M10	M10	M12	M12	M12	M12	M10	M8	M12	M12			
NEF210	20	50			M10	M10	M10	M10	M10	M10	M10	M10	M10	M10	M12	M12	M12	M16	M16	M16	M16	M12	M10	M8	M16

Model No.	F dimension [mm]		Bore diameter [mm]																					
	Standard hub・Enlarged hub	Extended hub	43 to 48	49 to 50	51 to 53	54 to 57	58 to 60	61 to 70	71 to 73	74	75	76 to 80	81	82 to 83	84 to 90	91 to 95	96 to 100	101 to 109	110	111 to 116	117 to 118	119 to 120	121 to 130
NEF340	25	60	M12	M12	M12	M12	M12	M16	M16	M16	M16	M16	M16	M16	M16	M12	M16	M16	M16				
NEF540	30	60			M12	M12	M12	M16	M16	M16	M16	M16	M20	M20	M20	M20	M20	M16	M20	M20	M20	M20	
NEF700	35	60			M16	M16	M16	M16	M16	M16	M16	M16	M20	M20	M20	M20	M20	M20	M20	M16	M12	M20	M20

* Contact Tsubaki to align the keyway position of the right and left hubs.

Keyway positions

NEF spacer type

Spacer type (Standard hub x Standard hub) NEF □□ W-N □□ ×N □□

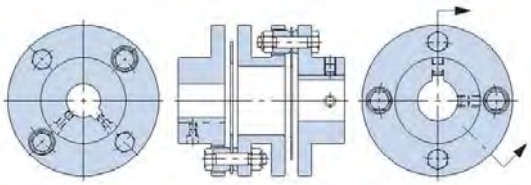

Spacer type (Enlarged hub x Enlarged hub) NEF □□ W-K □□ ×K □□

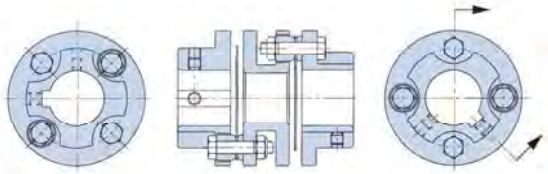

Spacer type (Enlarged hub x Standard hub) NEF □□ W-K □□ ×N □□

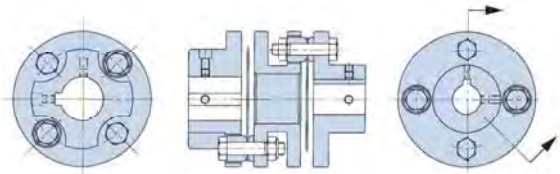

Standard-dimension long spacer type NEF □□ -W-N □□ ×N □□ -JS □□□

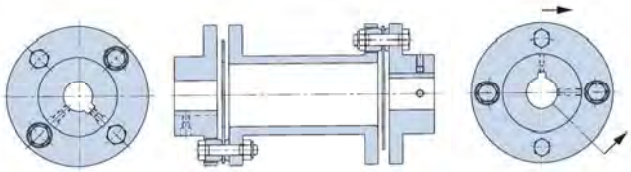

Long spacer type NEF □□ -W-N □□ ×N □□ -J □□□

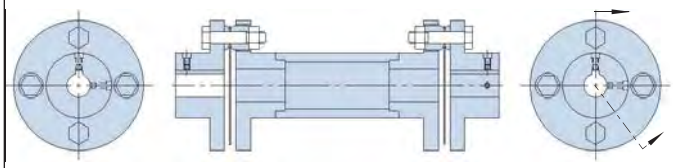

Single-plate spacer type NEF □□ -W-N □□ ×N □□ -JT □□□

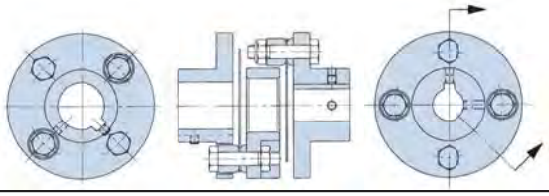

NEF single type

Single type (Standard hub x Standard hub) NEF □□ S-N □□ ×N □□

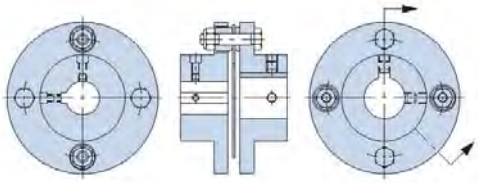

Single type (Enlarged hub x Enlarged hub) NEF □□ S-K □□ ×K □□

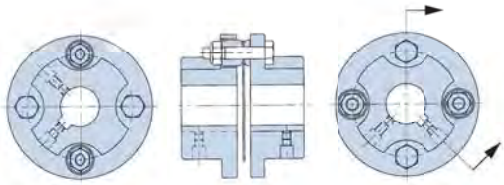

Single type (Enlarged hub x Standard hub) NEF □□ S-K □□ ×N □□

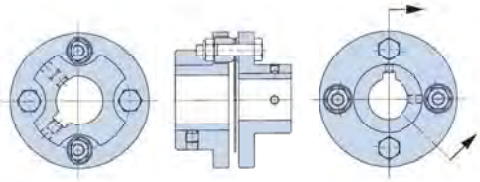

NEH spacer type

Spacer type NEH □□ W-N □□ ×N □□

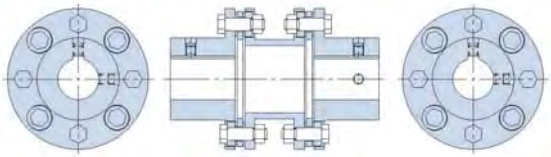

[Keyway position alignment]

When bore machining is done by Tsubaki, the keyway directions of the right and left hubs are not in alignment in some types.
If you require precise keyway phase alignment, specify a type with keyway position alignment when ordering.

Products with bores machined for servomotor tapered shafts

Hubs with bores machined for 11 and 16 mm diameter servomotor shafts are available.

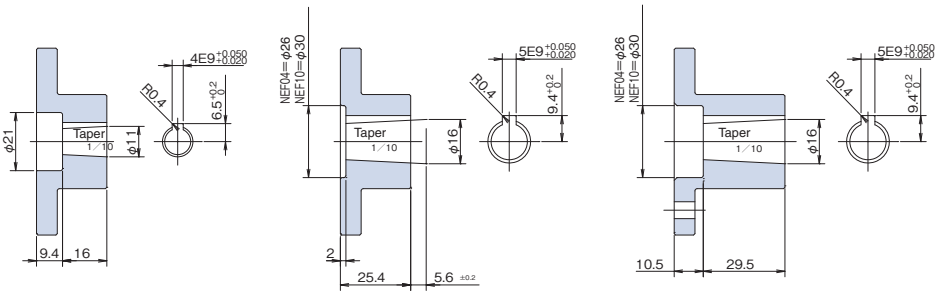

NEF04 Hub name = N11T (made-to-order product) NEF04 Hub name=N16T
NEF10 Hub name=N16T

NEF04 Hub name=L16T
NEF10 Hub name=L16T

<Mounting example>

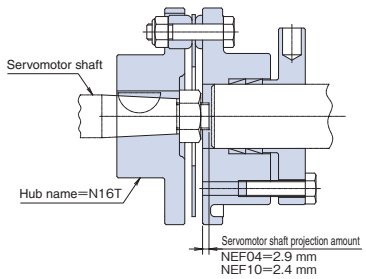

NEF Taper-Lock coupling

Transmission capacity/Dimensions

Single type NEF04S to NEF25S

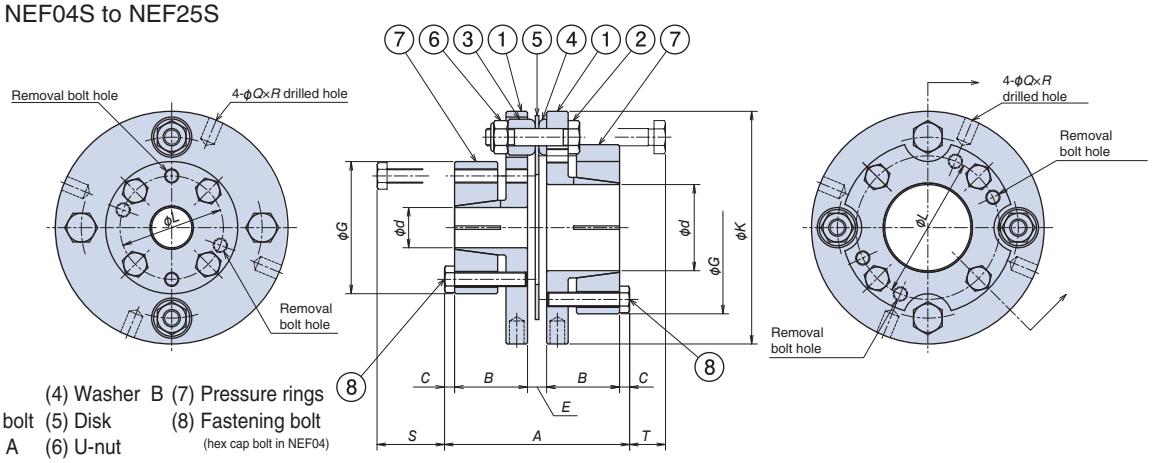

(1) Hubs
(2) Reamer bolt
(3) Washer A
(4) Washer B
(5) Disk
(6) U-nut
(7) Pressure rings
(8) Fastening bolt (hex cap bolt in NEF04)

Unit : [mm]

Model No.	Allowable torque N·m {kgf·m}	Maximum rotation speed r/min	Minimum bore diameter	Maximum bore diameter	Torsional stiffness N·m/rad {kgf·m/rad}	Shaft-direction spring constan N/mm {kgf/mm}	Allowable misalignment			Weight kg	Moment of inertia kg·m²
							Angular misalignment deg	Parallel misalignment deg	End play mm		
NEF04S	39.2 {4}	20000	10	22	2.45×10^4 $\{0.25\times10^4\}$	40.2 {4.1}	1	–	±0.8	0.6	2.94×10^{-4}
NEF10S	98 {10}	20000	14	35	8.8×10^4 $\{0.9\times10^4\}$	58.8 {6.0}	1	–	±0.8	0.9	7.30×10^{-4}
NEF18S	176 {18}	18000	15	38	15.7×10^4 $\{1.6\times10^4\}$	127 {13}	1	–	±3.8	1.3	14.2×10^{-4}
NEF25S	245 {25}	18000	24	50	25.5×10^4 $\{2.6\times10^4\}$	157 {16}	1	–	±4.0	1.7	23.5×10^{-4}

Model No.	A	B	φK	E	C	φG	φL	φDd	φQ	R	S	T
NEF04S	58.1	22	67.5	6.1	4	42	34	29	5.1	8	21	15.4
NEF10S	64.4	25.4	81	6.6	3.5	46	36	37	5.1	8	26	12.5
						53	43					
						60	50					
NEF18S	70.3	27	93	8.3	4	49	37	39	6.2	10	26	20.7
						58	46					
						66	54					
NEF25S	80.2	30.5	104	11.2	4	60	48	45	6.2	10	31	20
						70	56					
						78	66					

Notes 1. The maximum rotation speed does not take dynamic balance into consideration.
2. The weight and moment of inertia are the values at maximum bore diameter.
3. Each allowable misalignment is based on the assumption that both of the other two misalignment values are 0 (zero).
4. The standard bore diameters are shown below.
5. The recommended tolerance for mounted shafts is h7. Shaft diameters of 35 mm also support servomotor shafts with a tolerance of ($^{+0.010}_{0}$).
6. Other shaft coupling types (keyway/clamp) can be used in combination.

Standard bore diameters

Model No.	Fastening bolt size	Bolt tightening torque N·m{kgf·m}	Standard bore diameter [mm]																						
			10	11	12	14	15	16	17	18	19	20	22	24	25	28	30	32	35	38	40	42	45	48	50
NEF04	M4	3.0{0.3}	●	●	●	●	●	●	●	●	●	●	●												
NEF10	M5	4.9{0.5}				●	●	●	●	●	●	●	●	●	●	●	●	●	●						
NEF18	M6	9.8{1.0}					●	●	●	●	●	●	●	●	●	●	●	●	●	●					
NEF25	M6	9.8{1.0}												●	●	●	●	●	●	●	●	●	●	●	●

Spacer type NEF04W to NEF25W

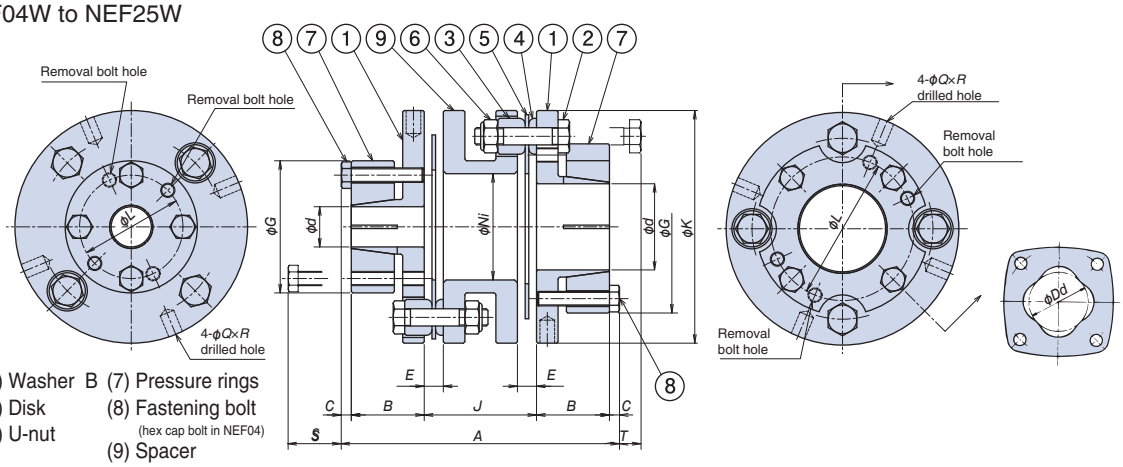

(1) Hubs (4) Washer B (7) Pressure rings
(2) Reamer bolt (5) Disk (8) Fastening bolt (hex cap bolt in NEF04)
(3) Washer A (6) U-nut (9) Spacer

Unit : [mm]

Model No.	Allowable torque N·m {kgf·m}	Maximum rotation speed r/min	Minimum bore diameter	Maximum bore diameter	Torsional stiffness N·m/rad {kgf·m/rad}	Shaft-direction spring constan N/mm {kgf/mm}	Allowable misalignment			Weight kg	Moment of inertia kg·m²
							Angular misalignment deg	Parallel misalignment deg	End play mm		
NEF04W	39.2 {4}	20000	10	22	1.18×10^4 $\{0.12\times10^4\}$	20.6 {2.1}	2	0.5	± 1.6	1.0	5.36×10^{-4}
NEF10W	98 {10}	20000	14	35	3.92×10^4 $\{0.4\times10^4\}$	29.4 {3.0}	2	0.55	± 2.0	1.5	12.8×10^{-4}
NEF18W	176 {18}	18000	15	38	7.84×10^4 $\{0.8\times10^4\}$	63.7 {6.5}	2	0.6	± 2.4	2.3	26.0×10^{-4}
NEF25W	245 {25}	18000	24	50	12.7×10^4 $\{1.3\times10^4\}$	78.4 {8.0}	2	0.7	± 2.8	2.9	42.4×10^{-4}

Model No.	A	B	φ K	E	C	φ G	φ L	φ Ni	φ Dd	φ Q	R	J	S	T
NEF04W	88	22	67.5	6.1	4	42	34	25	29	5.1	8	36	21	15.4
NEF10W	96.8	25.4	81	6.6	3.5	46	36	37	37	5.1	8	39	26	12.5
						53	43							
						60	50							
NEF18W	109	27	93	8.3	4	49	37	38	39	6.2	10	47	26	20.7
						58	46							
						66	54							
NEF25W	122	30.5	104	11.2	4	60	48	47	45	6.2	10	53	31	20
						70	56							
						78	66							

Notes 1. The maximum rotation speed does not take dynamic balance into consideration.
2. The weight and moment of inertia are the values at maximum bore diameter.
3. Each allowable misalignment is based on the assumption that both of the other two misalignment values are 0 (zero).
4. The standard bore diameters are listed in the last table on the previous page.
5. The recommended tolerance for mounted shafts is h7. Shaft diameters of 35 mm also support servomotor shafts with a tolerance of ($^{+0.010}_{0}$).
6. Other shaft coupling types (keyway/clamp) can be used in combination.

Model Number

NEF18 S - H 20 X H 35

Size

Type
S : Single type
W : Spacer type

Taper-Lock coupling

Bore diameter

NEF clamp coupling

A single bolt is used on each half hub for friction clamping.
Compared with the Power-Lock type (see page 51), which also uses friction clamping, this type is shorter in the shaft direction and saves space.
The spacer types absorb all forms of misalignment, but the single type cannot absorb parallel misalignments.

Transmission capacity/Dimensions

Single type

NEF 02S, 04S, 10S, 18S, 25S and 45S standard hubs

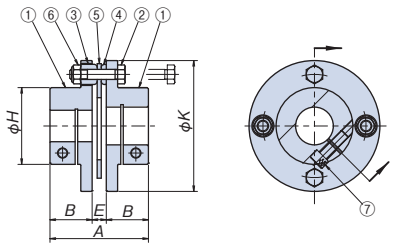

NEF 02S, 04S and 45S enlarged hubs

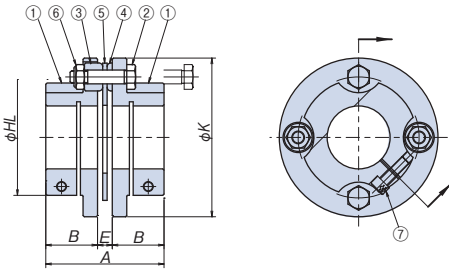

NEF 10S, 18S and 25S square hubs

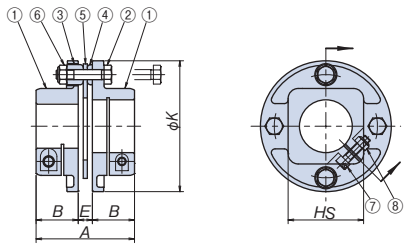

(1) Hubs (2) Reamer bolt (3) Washer (A) (4) Washer (B) (5) Disk (6) U-nut (7) Spacer

Model No.	Allowable torque N·m {kgf·m}	Maximum rotation speed r/min	Bore diameter range	Torsional stiffness N·m/rad {kgf·m/rad}	Shaft-direction spring constan N/mm {kgf/mm}	Allowable misalignment		Weight kg	Moment of inertia kg·cm²
						Angular misalignment deg	End play mm		
NEF02S	19.6 { 2}	20000	8 to 25	1.96×10^4 $\{0.2\times10^4\}$	68.6 { 7.0}	1	±0.8	0.33 (0.39)	1.23 (1.56)
NEF04S	39.2 { 4}	20000	10 to 25	2.45×10^4 $\{0.25\times10^4\}$	40.2 { 4.1}	1	±0.8	0.78 (0.79)	2.78 (3.23)
NEF10S	98 {10}	20000	12 to 35	8.82×10^4 $\{0.9\times10^4\}$	58.8 { 6 }	1	±1.0	0.92 (0.80)	6.43 (5.85)
NEF18S	176 {18}	18000	14 to 35	15.7×10^4 $\{1.6\times10^4\}$	127 {13 }	1	±1.2	1.45 (1.24)	13.5 (12.2)
NEF25S	245 {25}	15000	25 to 42	25.5×10^4 $\{2.6\times10^4\}$	157 {16 }	1	±1.4	2.1 (1.8)	23 (20.9)
NEF45S	441 {45}	13000	25 to 55	44.1×10^4 $\{4.5\times10^4\}$	219 {22.3}	1	±1.6	4.6 (4.7)	57.5 (65.8)

Model No.	A	B	E	φ H	φ HL	HS	φ K	U	T
NEF02S	44.9	20	4.9	32	45	–	57	–	11
NEF04S	56.9	25.4	6.1	34	50	–	67.5	–	15.5
NEF10S	57.4	25.4	6.6	46	–	47	81	66	16
NEF18S	67.7	28.7	8.3	51	–	49	93	68	23
NEF25S	78.2	33.5	11.2	61	–	60	104	78.3	19
NEF45S	93.9	41.1	11.7	71	92	–	126	–	23

Notes 1. The maximum rotation speed is determined by the coupling's transmission capacity. Balance adjustment has not been performed.
2. Weight and moment of inertia values apply to standard hubs with maximum bore diameters. Figures in angle brackets ( ) are values for enlarged hubs (for NEF 02, 04 and 45) or square hubs (for NEF 10, 18 and 25).
3. End play value is based on zero angular misalignment.
4. The square hub model uses a U-nut to prevent the clamping bolts from loosening. Others use Nylok bolts.
5. See the table below for the transmission torque of the clamp element. Contact Tsubaki for bore diameters that are not listed.
6. Contact Tsubaki for mounting on a hollow shaft.
7. The torsional stiffness listed above is only for the disks.

Bolt size	M4	M5	M6	M8
Tightening torque [N·m]	4.02	8.33	13.7	34.3

Standard bore diameters and transmitted torques

Model No.		Bore diameter																								
		10	11	12	14	15	16	17	18	19	20	22	24	25	28	30	32	35	38	40	42	45	48	50	52	55
NEF02	Bolt size	M4	M4	M4	M4	M4	M4	M4	M4	M4	M4	M4	M4	M4												
	Transmitted torque [N·m]	18.6 ○	19.6	19.6 ○	19.6 ○	19.6 ○	19.6 –	19.6 ○	19.6 ○	19.6 ●	19.6 ●	19.6 ●	19.6 ●	19.6 ●												
NEF04	Bolt size			M4	M4	M4	M4	M4	M4	M4	M4	M4	M4	M4												
	Transmitted torque [N·m]			17.6 ○	30.1 ○	34.3 ○	37.2 ○	39.2 ○	39.2 –	39.2 ●	39.2 ●	39.2 ●	39.2 ●	39.2 ●												
NEF10	Bolt size					M6	M6	M6	M6	M6	M6	M6	M6	M6	M6	M6	M6	M5								
	Transmitted torque [N·m]					95 ○	98	98	98 ○	98 –	98 ○	98 ○	98 □	98 □	98 □	98 □	98 –	98 □								
NEF18	Bolt size					M6	M6	M6	M6	M6	M6	M6	M6	M6	M6	M6	M6	M6								
	Transmitted torque [N·m]					68	83	90	100	109 ○	113 –	126 ○	136 ○	143 ○	176 □	176 □	176 □	176 □								
NEF25	Bolt size													M8	M8	M8	M8	M8	M6	M6	M6					
	Transmitted torque [N·m]													245 ○	245 –	245 ○	245 □	245 □	230 □	239 □	245 □					
NEF45	Bolt size															M8	M8	M8	M8	M8	M8	M8	M8	M8	M8	M8
	Transmitted torque [N·m]															363 ○	372 –	393 ○	416 ○	429 ○	440 ○	441 ●	441 –	441 ●	441 –	441 ●

Notes 1. The white circles in the table indicate standard hubs. The black circles indicate enlarged hubs. The white squares indicate square hubs.
2. The recommended shaft tolerance for clamp hubs is h7.
3. The recommended bore tolerance for 35-mm diameter shafts is ($^{+0.010}_{0}$) or ($^{+0.010}_{-0.015}$).

Spacer type

NEF 02W standard hubs

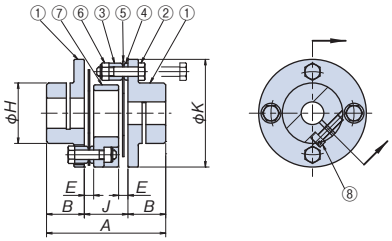

NEF 04W, 10W, 18W, 25W and 45W standard hubs

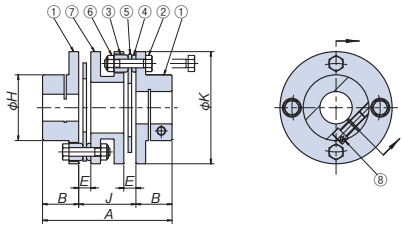

(1) Hubs
(2) Reamer bolt
(3) Washer (A)
(4) Washer (B)
(5) Disk
(6) U-nut
(7) Spacer

Model No.	Allowable torque N·m {kgf·m}	Maximum rotation speed r/min	Bore diameter range	Torsional stiffness N·m/rad {kgf·m/rad}	Shaft-direction spring constan N/mm {kgf/mm}	Allowable misalignment			Weight kg	Moment of inertia kg·cm²
						Angular misalignment deg	Parallel misalignment deg	End play mm		
NEF02W	19.6 { 2}	20000	8 to 25	1.00×10^4 $\{0.10\times10^4\}$	34.3 { 3.5}	2	0.3	±1.6	0.45 (0.46)	1.68 (1.90)
NEF04W	39.2 { 4}	20000	10 to 25	1.18×10^4 $\{0.12\times10^4\}$	20.6 { 2.1}	2	0.5	±1.6	1.28 (1.29)	5.2 (5.7)
NEF10W	98 {10}	20000	12 to 35	3.92×10^4 $\{0.4\times10^4\}$	29.4 { 3 }	2	0.55	±2.0	1.52 (1.35)	11.7 (11.0)
NEF18W	176 {18}	18000	14 to 35	7.84×10^4 $\{0.8\times10^4\}$	63.7 { 6.5}	2	0.6	±2.4	2.45 (2.24)	24.9 (23.6)
NEF25W	245 {25}	15000	25 to 42	12.7×10^4 $\{1.3\times10^4\}$	78.4 { 8 }	2	0.7	±2.8	3.3 (3.0)	40.8 (38.5)
NEF45W	441 {45}	13000	25 to 55	21.6×10^4 $\{2.2\times10^4\}$	109 {11.1}	2	0.8	±3.2	6.9 (7.0)	95.8 (104)

Model No.	A	B	E	φ H	HL	HS	φ K	U	T
NEF02W	63.0	20	4.9	32	45	–	57	–	11
NEF04W	86.8	25.4	6.1	34	50	–	67.5	–	15.5
NEF10W	89.8	25.4	6.6	46	–	47	81	66	16
NEF18W	104.4	28.7	8.3	51	–	49	93	68	23
NEF25W	120	33.5	11.2	61	–	60	104	78.3	19
NEF45W	144.2	41.1	11.7	71	92	–	126	–	23

Notes 1. The maximum rotation speed is determined by the coupling's transmission capacity. Balance adjustment has not been performed.
2. Weight and moment of inertia values apply to standard hubs with maximum bore diameters. Figures in angle brackets ( ) are values for enlarged hubs (for NEF 02, 04 and 45) or square hubs (for NEF 10, 18 and 25).
3. End play value is based on zero angular misalignment.
4. The square hub model uses a U-nut to prevent the clamping bolts from loosening. Others use Nylok bolts.
5. See the table below for the transmission torque of the clamp element. Contact Tsubaki for bore diameters that are not listed.
6. Contact Tsubaki for mounting on a hollow shaft.
7. The torsional stiffness listed above is only for the disks.

Model Number

NEF18 W - N 25 C X B 30 C

Size

Type
S : Single type
W : Spacer type

Hub type
N : Standard hub
K : Enlarged hub
L : Extended hub
B : Square hub
* see page 38

Bore diameter
(Pilot bore: R)

Shaft coupling method
C : Clamp
P2 : Power-Locks (see page 51)
* Number indicates the quantity of Power-Locks.
T : Tapered bore machining (see page 46)

Notes 1. Place the smaller bore diameter in front.
2. Place the pilot bore (symbol R) in front.

NEF POWER-LOCK® coupling

This bored series features a POWER-LOCK for friction clamping on both sides, combining pressure flange sets.
Ideal for servomotor applications.
Machined bore products are kept in stock.
The spacer types absorb all forms of misalignment, but the single type cannot absorb parallel misalignments.

Single type

NEF04S

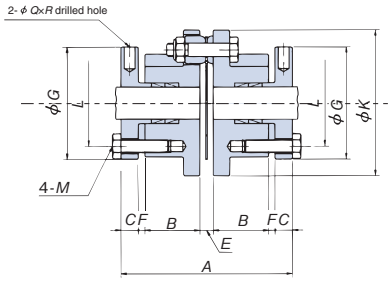

NEF10S, NEF18S, NEF25S

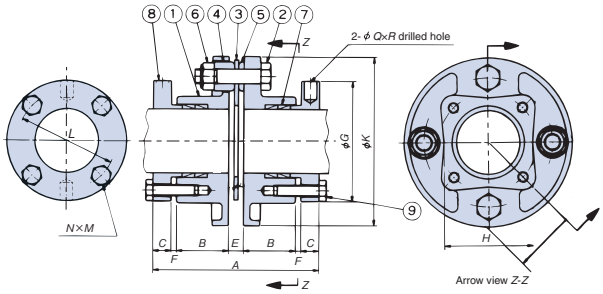

(1) Square hub
(enlarged hub in NEF04S)
(2) Reamer bolt
(3) Disk
(4) Washer (A)
(5) Washer (B)
(6) U-nut
(7) POWER-LOCK
(8) Pressure flange
(9) Pressure bolt

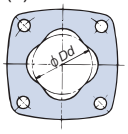

Disk inner diameter

Unit : [mm]

Model No.	Allowable torque N·m {kgf·m}	Maximum rotation speed r/min	Standard-stock bore diameter notes:1	Maximum bore diameter notes:2	Torsional stiffness N·m/rad {kgf·m/rad}	Shaft-direction spring constan N/mm {kgf/mm}	Allowable misalignment		Weight kg	Moment of inertia kg·m²
							Angular misalignment deg	End play mm		
NEF04S	39.2 {4}	20000	10 to 22	22	2.45×10^4 {0.25×10^4}	40.2 {4.1}	1	± 0.8	0.9	3.0
NEF10S	98 {10}	20000	14 to 35	35	8.8×10^4 {0.9×10^4}	58.8 {6.0}	1	± 1.0	1.2	8.25
NEF18S	176 {18}	18000	14 to 35	38	15.7×10^4 {1.6×10^4}	127 {13}	1	± 1.2	1.7	14.8
NEF25S	245 {25}	18000	18 to 42	50	25.5×10^4 {2.6×10^4}	157 {16}	1	± 1.4	2.7	28.8

Model No.	A	B	C	φ Dd	F	E	φ G	H	φ K	L	M	N	Q	R	U
NEF04S	78.9	25.4	8	29	3	6.1	52	–	67.5	40	M6 × 22 ℓ	4	5	10	–
NEF10S	83.4	25.4	10	37	3	6.6	66	47	81	54	M6 × 22 ℓ	4	7	10	66
NEF18S	91.7	28.7	10	39	3	8.3	66	49	93	54	M6 × 22 ℓ	4	7	10	68
NEF25S	108.2	33.5	12	45	3	11.2	78	60	104	64	M8 × 28 ℓ	4	8	13	78.3

Notes 1. Standard-inventory bore diameter products have bores machined with two rows of Power-Locks for both hubs and pressure flanges, and are kept in stock.
The Power-Lock bore diameters in the table below can be selected.
2. The maximum shaft bore diameter includes a margin for a Power-Lock.
3. The maximum rotation speed is determined by the coupling's transmission capacity. Balance adjustment has not been performed.
4. Weight and moment of inertia values apply to maximum bore diameters.
5. End play value is based on zero angular misalignment.
6. NEF45 and larger Power-Lock models can be manufactured. Please request drawings and specifications.
7. Strength must be checked when mounting the product on a hollow shaft. Please inquire with Tsubaki for information.

POWER-LOCK bore diameters

Model No.	Hub type	Standard bore diameter (mm)																			
		10	12	14	15	16	17	18	19	20	22	24	25	28	30	32	35	36	38	40	42
NEF04	Enlarged hub	●	●	●	●	●	●	●	●	●	●										
NEF10	Square hub		●	●	●	●	●	●	●	●	●	●	●	●	●	●	●				
NEF18	Square hub			●	●	●	●	●	●	●	●	●	●	●	●	●	●				
NEF25	Square hub							●	●	●	●	●	●	●	●	●	●	●	●	●	●

Spacer type

NEF04W

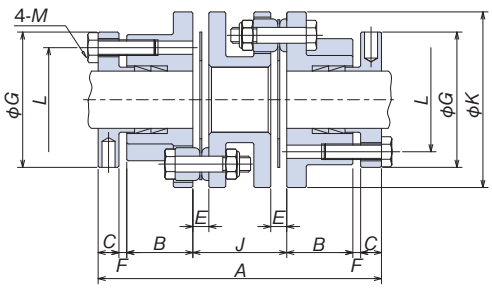

NEF10W, NEF18W, NEF25W

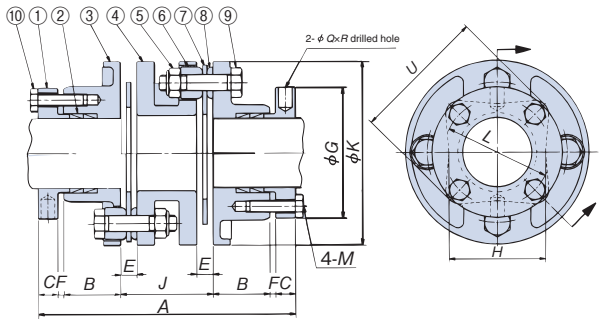

(1) Pressure flange
(2) POWER-LOCK
(3) Square hub
(enlarged hub in NEF04W)
(4) Spacer
(5) U-nut
(6) Washer (A)
(7) Disk
(8) Washer (B)
(9) Reamer bolt
(10) Pressure bolt

Unit : [mm]

Model No.	Allowable torque N·m {kgf·m}	Maximum rotation speed r/min	Pilot bore	Standard-stock bore diameter notes 1	Maximum bore diameter notes 2	Torsional stiffness N·m/rad {kgf·m/rad}	Shaft-direction spring constan N/mm {kgf/mm}	Allowable misalignment			Weight kg	Moment of inertia kg·m²
								Angular misalignment deg	Parallel misalignment deg	End play mm		
NEF04W	39.2 {4}	20000	8	10 to 22	22	1.18×10^4 $\{0.12\times10^4\}$	20.6 {2.1}	0.5	2	± 1.6	1.4	7.1
NEF10W	98 {10}	20000	10	14 to 35	35	3.92×10^4 $\{0.4\times10^4\}$	29.4 {3}	0.55	2	± 2.0	1.9	14
NEF18W	176 {18}	18000	12	14 to 35	38	7.84×10^4 $\{0.8\times10^4\}$	63.7 {6.5}	0.6	2	± 2.4	2.7	27
NEF25W	245 {25}	18000	15	18 to 42	50	12.7×10^4 $\{1.3\times10^4\}$	78.4 {8}	0.7	2	± 2.8	3.9	47

Model No.	A	B	C	φ Dd	F	E	φ G	H	φ K	L	M	N	Q	R	U
NEF04W	108.8	25.4	8	29	3	6.1	52	–	67.5	40	M6 × 22 ℓ	4	4	7	–
NEF10W	115.8	25.4	10	37	3	6.6	66	47	81	54	M6 × 22 ℓ	4	7	10	66
NEF18W	130.4	28.7	10	39	3	8.3	66	49	93	54	M6 × 22 ℓ	4	7	10	68
NEF25W	150	33.5	12	45	3	11.2	78	60	104	64	M8 × 28 ℓ	4	8	13	78.3

Notes 1. Standard bore diameter products have two rows of Power-Locks.
The Power-Lock bore diameters in the table below can be selected.
2. The maximum shaft bore diameter includes a margin for a Power-Lock.
3. The maximum rotation speed is determined by the coupling's transmission capacity. Balance adjustment has not been performed.
4. Weight and moment of inertia values apply to maximum bore diameters.
5. End play value is based on zero angular misalignment.
6. NEF45 and larger Power-Lock models can be manufactured. Please request drawings and specifications.
7. Dimension *Dd* in the table of dimensions is the internal diameter of the disk.
8. Strength must be checked when mounting the product on a hollow shaft. Please inquire with Tsubaki for information.

Model Number

NEF18 S - B 30 P2 X B 35 P2

Size

Type
S : Single type
W : Spacer type

Hub type
N : Standard hub
K : Enlarged hub
L : Extended hub
B : Square hub
* see page 38

Bore diameter

Shaft coupling method
C : Clamp (see page 49)
P2 : Power-Locks
* Number indicates the quantity of Power-Locks.
T : Tapered bore machining (see page 46)

Notes 1. Place the smaller bore diameter in front.

NEF POWER-LOCK® type

POWER-LOCK transmitted torque

The table below shows the transmitted torque when using a Power-Lock (EL Series).
When using three Power-Lock rows, multiply the transmitted torque value for one row by 1.85.
The pressure bolt tightening torque for one row is the same as for multiple rows.
The values below are the values applicable for Power-Lock inner ring pressurization. Contact Tsubaki for the values when using outer ring pressurization.

Bore diameter	Pressure bolt tightening torque [N·m]								Power-Lock transmitted torque [N·m] Top: When using one POWER-LOCK row (EL Series) Bottom: When using two POWER-LOCK rows (EL Series)							
	NEF04	NEF10	NEF18	NEF25	NEF45	NEF80	NEF130	NEF210	NEF04	NEF10	NEF18	NEF25	NEF45	NEF80	NEF130	NEF210
	M6	M6	M6	M8	M8	M10	M10	M12								
10	4.41								10.8 16.7							
12	4.70								15.7 24.5							
13	4.8								17.6 27.3							
14	7.74	7.74	7.74						30.4 47.1	30.4 47.1	30.4 47.1					
15	8.72	8.72	8.72						34.3 53.2	35.3 54.7	35.3 54.7					
16	9.02	9.02	9.02						39.2 60.8	40.2 62.3	40.2 62.3					
17	9.21	9.21	9.21						45.1 69.9	45.1 69.9	45.1 69.9					
18	9.51	9.51	9.51	12.9	12.9				50 77.5	51 79.1	51 79.1	51 79.1	50 77.5			
19	10.9	10.9	10.9	14.8	14.8				55.9 86.6	56.8 88.0	56.8 88.0	56.8 88.0	55.9 86.6			
20	11.1	11.1	11.1	15.1	15.1	18.7	18.7		61.7 95.6	62.7 97.2	62.7 97.2	62.7 97.2	61.7 95.6	62.7 97.2		
22	9.7	11.1	11.1	15.1	15.1	18.6	18.6		63.7 98.7	75.5 117	75.5 117	75.5 117	75.5 117	75.5 117		
24		11.7	11.7	15.9	15.9	19.7	19.7			90.2 140	90.2 140	90.2 140	90.2 140	90.2 140		
25		12.4	12.4	17	17	21	21			98 152	98 152	98 152	97 150	98 152		
28		12.9	12.9	17.6	17.6	21.8	21.8			123 191	123 191	123 191	123 191	123 191	123 191	
30		13	13.7	19.1	19.1	23.6	23.6			129 200	137 212	141 219	140 217	141 219	141 219	
32		12.2	13.7	19.6	19.6	24.7	24.7			128 198	148 229	161 250	160 248	161 250	161 250	
35		10.5	12.4	24.9	24.9	30.8	30.8	36.5		109 169	136 211	218 338	217 336	217 336	217 336	217 336
36				26	26	32.2	32.2	38.2				230 357	230 357	230 357	230 357	230 357
38				25.9	27	33.4	33.4	39.7				244 378	256 397	256 397	256 397	256 397
40				27.9	28.8	36	36	46.5				269 417	279 432	282 437	284 440	312 484
42				24.9	31.3	38.6	38	49.5				236 366	316 490	314 487	308 477	344 533
45					34.3	42.4	40.6	54.5					327 507	326 505	307 476	363 563
48					34.3	45.6	42.7	57					356 552	392 608	359 556	419 649
50					34.3	48.1	44.2	58.8					376 583	441 684	396 614	459 711
55					25.6	55	48.1	63.3					285 441	589 913	499 773	566 877
56						59	49.9	65.2						607 941	487 755	552 856
60						62.6	53.6	69.2						714 1107	586 908	652 1011
63							56.7	72.4							669 1040	734 1140
65							58.8	74.7							729 1130	791 1230
70							67.1	82.4							879 1360	917 1420
75							67.6	89.6							924 1430	1060 1640
80								104								1240 1920
85								116								1550 2400

Combining couplings with other POWER-LOCK Series

Couplings can also be combined with non-EL Series POWER-LOCK.
The shaft diameters supported when combining couplings with KE Series, AS Series and TF Series power locks are shown below.
Contact Tsubaki for dimensions and other information.
The hubs are standard hubs.

Unit : N·m{kgf·m}

Bore diameter	NEF45			NEF80		
	KE Series	AS Series	TF Series	KE Series	AS Series	TF Series
	Transmitted torque	Transmitted torque	Transmitted torque	Transmitted torque	Transmitted torque	Transmitted torque
16	101{10.3}			101{10.3}		
17	107{10.9}			107{10.9}		
18	113{11.6}		196{20}	113{11.6}		196{20}
19	120{12.2}	294{25}	206{21}	120{12.2}	294{25}	206{21}
20	206{21.0}	304{27}	216{22}	206{21.0}	304{27}	216{22}
22	226{23.1}	333{30}	245{25}	226{23.1}	333{30}	245{25}
24	329{33.6}	461{41}	265{27}	329{33.6}	461{41}	265{27}
25	343{35.0}	480{43}	274{28}	345{35.0}	480{43}	274{28}
28	432{44.2}	539{48}	461{47}	432{44.2}	539{48}	461{47}
30	515{52.6}	578{52}	500{51}	515{52.6}	578{52}	500{51}
32	549{56.1}	784{69}	529{54}	549{56.1}	784{69}	529{54}
35			774{79}	678{69.5}	862{76}	774{79}
38				921{94.3}	1029{91}	843{86}
40				969{99.3}	1088{96}	882{90}
42						931{95}

Bore diameter	NEF130			NEF210		
	KE Series	AS Series	TF Series	KE Series	AS Series	TF Series
	Transmitted torque	Transmitted torque	Transmitted torque	Transmitted torque	Transmitted torque	Transmitted torque
28	432{ 44.2}	539{ 48}	461{ 47}	432{ 44.2}	539{ 48}	461{ 47}
30	515{ 52.6}	578{ 52}	500{ 51}	515{ 52.6}	578{ 52}	500{ 51}
32	549{ 56.1}	784{ 69}	529{ 54}	549{ 56.1}	784{ 69}	529{ 54}
35	678{ 69.5}	862{ 76}	774{ 79}	678{ 69.5}	862{ 76}	774{ 79}
38	921{ 94.3}	1029{ 91}	843{ 86}	921{ 94.3}	1029{ 91}	843{ 86}
40	969{ 99.3}	1088{ 96}	882{ 90}	969{ 99.3}	1088{ 96}	882{ 90}
42	1010{104}	1720{152}	931{ 95}	1010{104}	1720{152}	931{ 95}
45	1090{112}	1840{163}	1850{189}	1090{112}	1840{163}	1850{189}
48	1390{143}	1960{173}	1970{201}	1390{143}	1960{173}	1970{201}
50	1700{174}	2050{181}	2060{210}	1700{174}	2050{181}	2060{210}
55			2550{260}	1860{191}	2750{244}	2550{260}
60			2770{283}	2180{223}	3000{266}	2770{283}
65						3010{307}

Bore diameter	NEF340			NEF540			NEF700		
	KE Series	AS Series	TF Series	KE Series	AS Series	TF Series	KE Series	AS Series	TF Series
	Transmitted torque	Transmitted torque	Transmitted torque	Transmitted torque	Transmitted torque	Transmitted torque	Transmitted torque	Transmitted torque	Transmitted torque
48	1390{143}	1960{173}	1970{201}						
50	1700{174}	2050{181}	2060{210}						
55	1860{191}	2750{244}	2550{260}	1860{191}	2750{244}	2550{260}	1860{191}	2750{244}	2550{260}
60	2180{223}	3000{266}	2770{283}	2180{208}	3000{266}	2770{283}	2180{223}	3000{266}	2770{283}
65	2360{242}	3550{315}	3010{307}	2360{242}	3550{315}	3010{307}	2360{242}	3550{315}	3010{307}
70			5150{525}	3750{377}	5490{490}	5150{525}	3750{377}	5490{490}	5150{525}
75			5490{560}	4030{404}	5880{530}	5490{560}	4030{404}	5880{530}	5490{560}
80			7840{800}	5010{503}	6270{560}	7840{800}	5010{503}	6270{560}	7840{800}
85			8330{850}			8330{850}	5320{534}	7350{650}	8330{850}
90						8820{900}		7740{690}	8820{900}

Example of coupling combined with KE Series POWER-LOCK

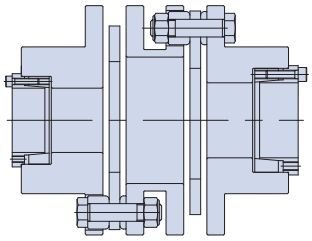

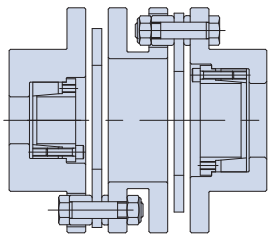

Example of coupling combined with AS Series POWER-LOCK

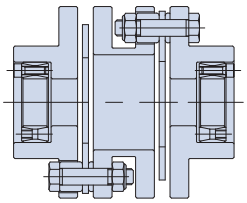

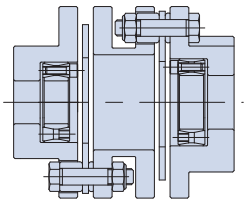

Example of coupling combined with TF Series POWER-LOCK

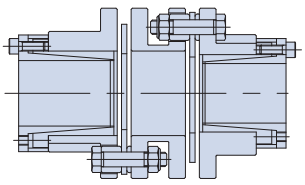

Special types

Adapter hub type (A hub type)/Unit spacer type (U type)

The adapter hubs of the NEH Series can have larger bore diameters than standard hubs. Unit spacers enabling spacer unit attachment and removal without disassembling the disk coupling unit are also available.

Adapter hub type (A hub type)

(1) Adapter hub
(2) Hub
(3) Reamer bolt
(4) Overload washer
(5) Disk set
(6) U-nut
(7) Spacer
(8) Pilot flange
(9) Hex bolt

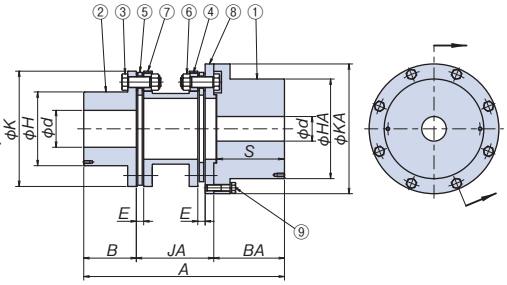

Unit spacer type (U type)

(1) Hub-U
(2) Pilot flange
(3) Reamer bolt
(4) Overload washer
(5) Disk set
(6) U-nut
(7) Spacer
(8) Pilot ring
(9) Hex bolt

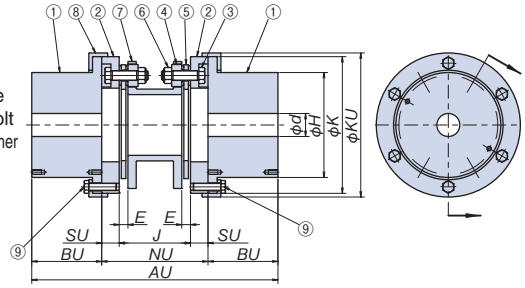

Transmission Capacity

Model No.	Allowable torque N·m{kgf·m}	Maximum rotation speed r/min	Torsional stiffness N·m/rad	Shaft-direction spring constan N/mm	Allowable misalignment		
					Angular misalignment deg	Parallel misalignment mm	End play mm
NEH09	8820{ 900}	5000	51.9×10^{5}	627	1.4	1.6	± 3.2
NEH14	13700{1400}	4700	84.3×10^{5}	1380	1	1.1	± 2.1
NEH20	19600{2000}	4300	12.7×10^{6}	1370	1	1.3	± 2.4
NEH30	29400{3000}	3900	20.6×10^{6}	1790	1	1.4	± 2.8
NEH41	40200{4100}	3700	25.5×10^{6}	1880	1	1.7	± 2.8

Notes 1. The maximum rotation speed is determined by the coupling's transmission capacity. Balance adjustment has not been performed. Contact Tsubaki if you need to perform balance adjustment for high-speed use.
2. The allowable misalignment values shown are the values applicable when the other two misalignment values are each 0.

Dimensions

Adapter hub

Unit : [mm]

Model No.	Standard hub		Adapter hub		A	B	S	BA	E	φ H	φ HA Adapter	φ K	φ KA Adapter	JA	Weight [kg]	Moment of inertia [kg·m²]
	Pilot bore diameter d	Keyway maximum bore diameter	Pilot bore diameter d	Keyway maximum bore diameter												
NEH09W	70	111	50	158	435	110	145	152	19	161	228	276	297	180	81	0.85
NEH14W	70	111	55	158	452	127	145	150	19	161	228	276	297	180	88	0.93
NEH20W	75	133	65	182	491	146	143	151	19	193	264	308	334	202	120	1.68
NEH30W	75	152	75	206	577.5	165	192.5	200	21.5	218	300	346	374	220	177	3.05
NEH41W	120	165	80	224	653	171	220.5	230	24	240	324	375	422	261.5	248	5.05

Unit spacer

Unit : [mm]

Model No.	Pilot bore diameter d	Keyway maximum bore diameter	AU	BU	E	φ H Adapter	J	φ K Adapter	φ KU	NU	SU	Weight [kg]	Moment of inertia [kg·m²]
NEH09U	50	158	535	152	19	228	155	297	313	231	38	108	1.2
NEH14U	55	158	531	150	19	228	155	297	313	231	38	115	1.3
NEH20U	65	182	565	151	19	264	171	334	344	263	46	155	2.33
NEH30U	75	206	680	200	21.5	300	187	374	384	280	46.5	230	4.23
NEH41U	80	224	790	230	24	324	224	422	438	330	53	325	7.2

Model Number

NEH14 U - N H 100 J D2 X A H 120 J D2

Size

Type
W : Spacer type
U : Unit spacer type

Hub type
N : Standard hub
A : Adapter hub
U : Unit hub

Replacement type for gear couplings

A type with a shorter distance between the hub faces (*J* dimension), and the same overall length and hub length as the gear coupling. Can be replaced as-is. Eliminates the cost and labor of gear coupling lubrication.

NEF-G type

(1) Hub-G
(2) Reamer bolt (A)
(3) Washer (A)
(4) Washer (B)
(5) Disk
(6) U-nut (A)
(7) Spacer flange
(8) Reamer bolt (B)
(9) U-nut (B)

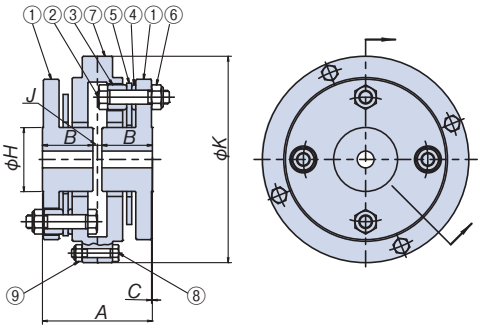

NEH-G type

(1) Hub-G
(2) Spacer flange
(3) Reamer bolt (A)
(4) Overload washer
(5) Disk set
(6) U-nut (A)
(7) Reamer bolt (B)
(8) U-nut (B)

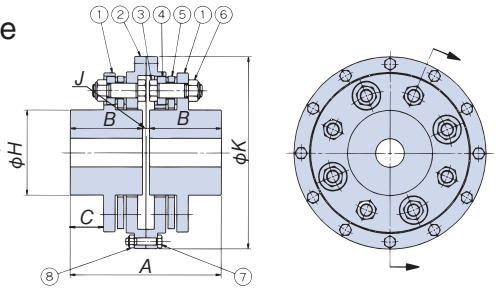

Transmission capacity/Dimensions

Unit : [mm]

Model No.	Allowable torque [N·m{kgf·m}]	Maximum rotation speed [r/min]	Keyway maximum bore diameter	*A*	*B*	*C*	*φ H*	*J*	*φ K*	Corresponding gear coupling		
										JIS model No.	Maximum shaft diameter	Torque [N·m]
NEF45G	441{ 45}	5000	32	88	40	1.8	47	8	161	100	25	196
NEF80G	784{ 80}	5000	40	98	45	0.8	57	8	184	112	32	392
NEF130G	1270{ 130}	5000	48	108	50	0.7	69	8	207	125	40	784
NEF210G	2060{ 210}	5000	55	134	63	6.5	80	8	245	140	50	1230
NEF340G	3330{ 340}	5000	65	170	80	19.9	93	10	264	160	63	1760
NEF540G	5290{ 540}	3400	75	190	90	19.6	106	10	306	180	71	2450
NEF700G	6860{ 700}	3100	80	210	100	11.3	116	10	342	200	80	3480
NEH09G	8820{ 900}	3500	95	236	112	47	140	12	334	224	90	4900
NEH14G	13700{1400}	3500	105	262	125	57.5	147	12	334	250	100	6960
NEH20G	19600{2000}	3000	120	294	140	61.5	171	14	378	280	125	11000
NEH30G	29400{3000}	2800	136	334	160	77.5	197	14	416	315	140	15700
NEH41G	40200{4100}	2500	149	376	180	88.5	213	16	462	355	160	24500

Notes 1. All sizes are made-to-order products.
2. Request drawings when placing orders.

Model Number

NEF45 G - G R X G H 40 J D2

Size

Type
G : Type for use with gear couplings

Hub type
G : Hubs for G type

Single Hub Insert Type/Double Hub Insert Type

These designs are suitable for making the overall length of the coupling shorter using a spacer type.

① Single hub insert type
The length in the shaft direction can be shortened by assembling one of the hubs inward.

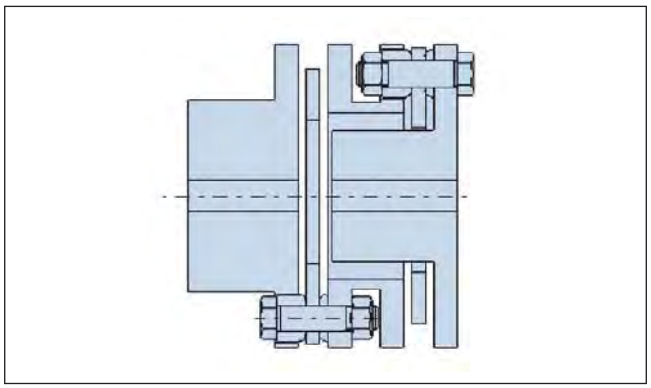

② Double hub insert type
The length in the shaft direction can be further shortened by assembling both hubs inward.

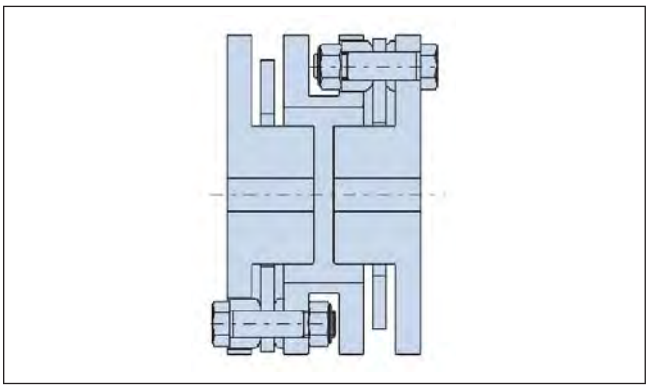

Special types

Electrically insulated type

Insulation resistance of 1 MΩ or more
Spacers on all products are subjected to withstand voltage/insulation testing (conforming to JIS C 8201-1).
Spacer length can be freely specified.

Structure

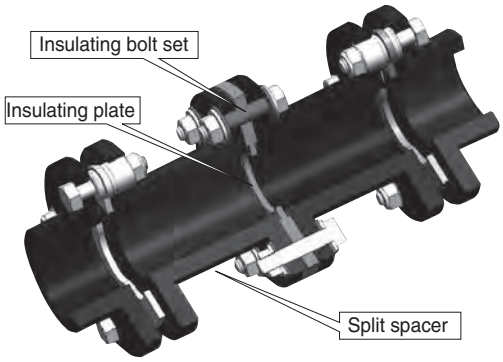

Transmission capacity/Dimensions

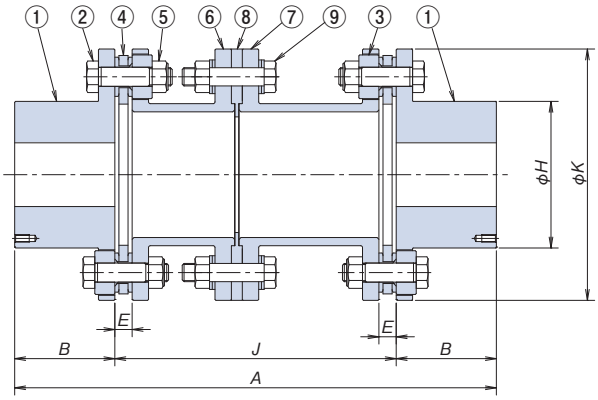

(1) Hubs
(2) Reamer bolt
(3) Washer
(4) Disk
(5) U-nut
(6) Insulation adapter A
(7) Insulation adapter B
(8) Insulating plate
(9) Insulating bolt

Unit : [mm]

Model No.	Allowable torque [N·m]	Maximum rotation speed [r/min]	Pilot bore	Keyway maximum bore diameter	A	B	E	φ H	J	φ K	Weight [kg]	Moment of inertia [kg·m²]
NEF80W	784{ 80}	6900	15	60	320.6	47.8	11.7	84	225	143	13	349
NEF130W	1270{ 130}	5700	25	74	346.4	57.2	16.8	106	232	168	18	668
NEF210W	2060{ 210}	5000	25	83	398	63.5	17	118	271	194	29	1427
NEF340W	3330{ 340}	4400	45	95	430.4	76.2	21.6	137	278	214	37	2213
NEF540W	5290{ 540}	3400	50	109	484.8	88.9	23.9	156	307	246	56	4497
NEF700W	6860{ 700}	3100	50	118	574.2	101.6	27.2	169	371	276	89	9000
NEH09W	8820{ 900}	3500	70	111	529	110	19	161	309	276	77	7370
NEH14W	13700{1400}	3300	70	111	578	127	19	161	324	276	88	8373
NEH20W	19600{2000}	3000	75	133	652	146	19	193	360	308	128	15790
NEH30W	29400{3000}	2700	75	152	714	165	21.5	218	384	346	177	27583

Notes 1. All sizes are made-to-order products.
2. Request delivery specifications when placing orders.
3. Inquire for information other model numbers.
4. The overall length *A* and *J* dimension values are the minimum values. Inquire if you require a shorter length than the minimum value shown.

Model Number

NEF80 W - N H 50 J D2 X N H 60 E D3 - JE 225

- Size
- Type
  - W : Spacer type
- Hub type
  - N : Standard hub
  - K : Enlarged hub
  - L : Extended hub
- Bore diameter (Pilot bore: R)
- Shaft coupling method
  - J : Keyway: New JIS, normal type
  - E : Keyway: Old JIS, Type 2
- Electrically insulated spacer
- *J* dimension

Couplings with overload protectors

ECHT-FLEX Couplings with overload protectors.

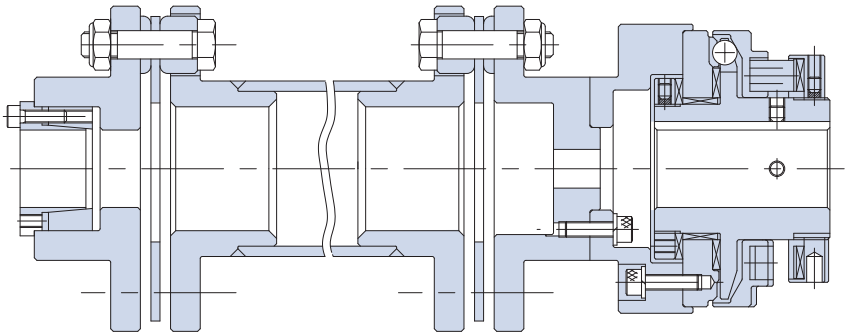

Couplings with one-way clutches

Composite spacer type

Dynamic balance adjustment option

Dynamic balancer for long spacers

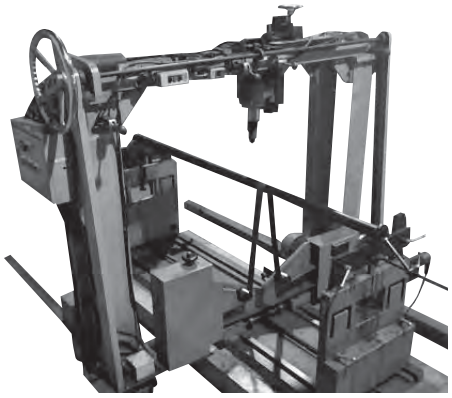

Upright dynamic balancer

Small size dynamic balancer

Product Selection

1. Correction torque calculation

1-1. When connected to servomotor or stepping motor

To determine the correction torque, multiply the maximum torque of the servomotor or stepping motor by the service factor (*SF*) corresponding to the type of load listed in the table below.

Service factor (SF) table

Load type	Uniform load	Moderately variable load	Highly variable load
Service factor (SF)	1.2	1.4	1.5

1-2. When connecting to general-purpose motor

To determine the correction torque, multiply the load torque calculated with the following formula by the service factor (SF) corresponding to the type of load listed in the table on the right.

$$T = \frac{60000 \times P}{2\pi \times n}$$

$$T' = T \times SF$$

T = Load torque [N・m]
P = Transmitted power [kW]
n = Rotation speed [r/min]
T´ = Correction torque [N・m]

Service factor (SF) table

Load type	Motor type				
	General purpose motor, gas turbine		Engine		
	Small moment of inertia	Large moment of inertia	Four cylinders	Six cylinders	Eight cylinders
Uniform load	1.5 to 1.75	1.75 to 2.0	2.5 to 4.0	2.0 to 2.5	1.5 to 2.0
Moderately variable load	2.0 to 2.5	2.5 to 3.0	4.0 to 5.0	2.5 to 3.5	2.0 to 3.0
Highly variable load	3.0 to 4.5	4.5 to 6.0	4.5 to 5.5	3.0 to 4.0	2.5 to 3.5

* If shock loads will be applied, calculate the correction torque by multiplying the motor's maximum output torque by a shock factor of 1 to 2.5.

Note: When the coupling method is clamp or Power-Lock coupling, prevent startup torque or other torque being applied even instantaneously if it will exceed the bore's friction transmission torque (see pages 49, 53).

2. Shaft diameter

Check that the shafts to be mounted are within the coupling's range of mountable shaft diameters.
With the Power-Lock, check the Power-Lock size, quantity and transmission torque.
With the clamp type, make sure that the correction torque determined in Item (1) does not exceed the allowable transmission torque for the clamp.
Strength must be checked when mounting the product on a hollow shaft. Inquire for information.

3. Long spacer type rotation limit

When long spacer types are used at high speeds, the rotation speed needs to be checked to avoid the resonance point.
When selecting long spacer types, check each model number's *J* dimension and whether its rotation speed is within the limit.
If the operating rotation speed exceeds the value shown below, a higher model number must be selected.

Long spacer length (*J* dimension) limits

Unit: [mm]

Model No.	Operating rotation speed [r/min]														
	3600	2000	1800	1500	1200	1000	900	750	720	600	500	400	300	200	150
NEF04W	980	1310	1380	1510	1680	1840	1940	2130	2170	2380	2610	2910	3360	4120	4750
NEF10W	1120	1500	1580	1730	1940	2120	2230	2450	2500	2730	2990	3350	3860	4730	5460
NEF18W	1180	1580	1660	1820	2040	2230	2350	2570	2620	2870	3150	3520	4060	4970	5740
NEF25W	1310	1760	1850	2030	2260	2480	2610	2860	2920	3190	3500	3910	4510	5520	
NEF45W	1440	1930	2030	2230	2490	2720	2870	3140	3210	3510	3840	4290	4960		
NEF80W	1560	2090	2200	2410	2690	2950	3100	3400	3470	3800	4160	4650	5360		
NEF130W	1780	3280	2510	2750	3070	3360	3540	3870	3950	4330	4740	5290			
NEF210W	1890	2520	2660	2910	3250	3560	3750	4100	4190	4580	5020	5610			
NEF340W	2024	2720	2870	3130	3500	3830	4040	4420	4510	4930	5400				
NEF540W	2180	2910	3070	3360	3750	4100	4320	4730	4820	5280	5780				
NEF700W	2270	3030	3190	3490	3890	4260	4490	4910	5010	5490					
NEH09W	2190	2930	3090	3380	3780	4130	4360	4770	4870	5330	5830				
NEH14W	2190	2930	3090	3380	3780	4130	4360	4770	4870	5330	5830				
NEH20W	2400	3200	3380	3690	4130	4520	4760	5210	5320	5820					
NEH30W	2570	3430	3610	3960	4420	4840	5100	5580	5690						
NEH41W	2650	3540	3730	4080	4560	4990	5260	5760	5870						

● Long spacer high-speed type

A larger coupling size can be selected as a way to avoid a dangerous RPM range. When use of a larger size is not possible, the same effect can be achieved by increasing the spacer weight. Please contact us.

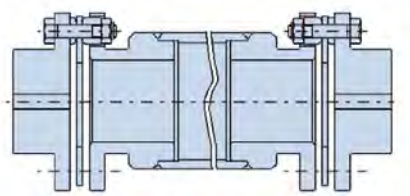

4. Cautions for servomotor drive

Depending on the natural frequency and electric control status of the system as a whole, a ball screw drive system using a servomotor may generate large vibration or abnormal sound caused by oscillation due to the characteristics of the servomotor.
In this case, adjust the torsional stiffness and moment of inertia of the overall drive system to increase the torsional natural frequency, or adjust the servo gain with the electric control tuning function of the servomotor.

5. ECHT-FLEX Couplings satisfying Items 1 to 4 above 3 should be chosen from the transmission capacity table on the page of the desired type.

Dynamic balance adjustment

Normally, because ECHT-FLEX couplings provide a well-balanced design, they need no particular balance adjustment. However, when the coupling is used at a high rotation speed, or when a long spacer is used, balance adjustment may be required.
In this case, inform us of your desired operating rotation speed, JIS balance rating, dimension "J", or spacer length so that we can perform your balance adjustment.
For dynamic balance adjustment, we use the following two methods:
1) Drilling the spacer flange end face, and 2) Mounting a balance weight to the spacer pipe periphery. (The spacer with a balance weight is shown below. The balance weight mounting position and quantity vary depending on operating conditions. Be careful not to interfere with the balance weight during rotation.)
When requesting a balance adjustment, specify either method 1) or 2) above.

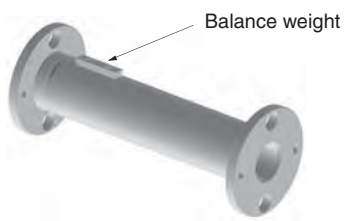

A spacer mounted with a balance weight

Notes for large distance between shaft ends

For large distance between shaft ends, Tsubaki offers a Long Spacer Type that can be used in a floating state without the need for an intermediate shaft bearing. We recommend this type of coupling if it fits your application needs.

Long spacer type

To avoid the 'skipping rope phenomenon' when your conditions require use of an intermediate shaft instead of a long spacer, use bearings to fasten intermediate shafts. The spacer type is the recommended disk coupling in this case.

Spacer type + fixed intermediate shaft + spacer type

If the distance between shafts is short and an intermediate shaft is used in a floating condition, be sure to use the Single-Type coupling.

Single type + floating intermediate shaft + single type

Never use the spacer type with additional floating shaft.

Spacer type + floating intermediate shaft + spacer type

Pay special attention to the above when replacing gear couplings or roller chain couplings with disk couplings.

Centering

① Single and spacer type couplings

The more accurate the initial centering of the coupling, the less stress it will experience during operation. Wear of the shaft bearing, depressions in the mounting surface, changes in conditions affected by temperature and vibration can reduce the life of the coupling and your equipment. Center accurately and conduct periodic adjustment according to the following procedure.

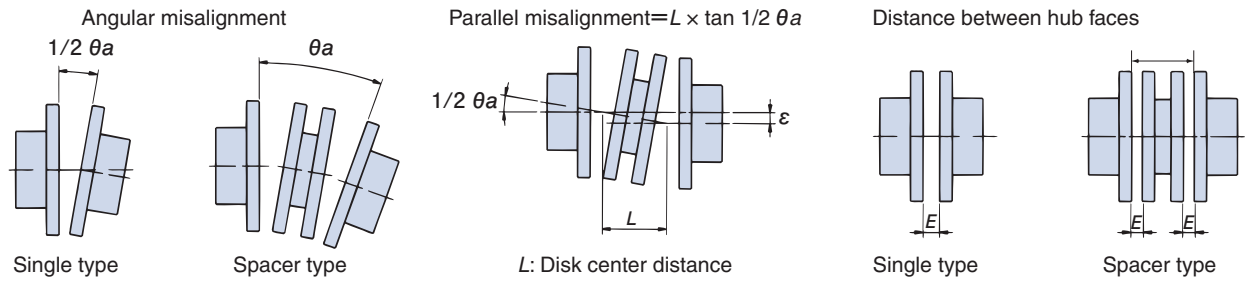

Parallel misalignment=$L \times \tan 1/2\,\theta a$ L: Disk center distance = $J - E$

Note: The single type coupling cannot absorb parallel misalignment (parallel misalignment of the shaft center).

The allowable angular misalignment, parallel misalignment, and error in the distance between the coupling's flange faces are all correlated to each other. Increasing one factor decreases the others, so the factors need to be considered together. Perform the initial centering adjustment carefully so that the following recommended value is not exceeded.

Table 1 Recommended centering value (Single type coupling)

	Model No.	Angular misalignment 1/2 θ a [deg]	Angular misalignment Dial reading T.I.R. [mm]	Parallel misalignment ε [mm]	Hub face distance misalignment E [mm]
Single type	NEF 02S	0.25	0.25	* Errors cannot be absorbed.	4.9 ± 0.25
	NEF 04S	0.25	0.29		6.1 ± 0.25
	NEF 10S	0.25	0.35		6.6 ± 0.25
	NEF 18S	0.25	0.40		8.3 ± 0.25
	NEF 25S	0.25	0.45		11.2 ± 0.25
	NEF 45S	0.25	0.55		11.7 ± 0.25
	NEF 80S	0.25	0.62		11.7 ± 0.25
	NEF 130S	0.25	0.73		16.8 ± 0.25
	NEF 210S	0.25	0.84		17.0 ± 0.25
	NEF 340S	0.25	0.93		21.6 ± 0.25
	NEF 540S	0.25	1.07		23.9 ± 0.25
	NEF 700S	0.25	1.20		27.2 ± 0.25

*Note: The single type is structurally unable to absorb parallel misalignment, but should be adjusted to within 0.02 mm during centering.

Table 2 Recommended centering value (Spacer type coupling)

	Model No.	Angular misalignment θ a [deg]	Angular misalignment Dial reading T.I.R. [mm]	Parallel misalignment ε [mm]	Hub face distance misalignment E [mm]
Spacer type	NEF 02W	0.5	0.50	0.075	4.9 ± 0.25
	NEF 04W	0.5	0.58	0.13	6.1 ± 0.25
	NEF 10W	0.5	0.71	0.14	6.6 ± 0.25
	NEF 18W	0.5	0.81	0.17	8.3 ± 0.25
	NEF 25W	0.5	0.91	0.18	11.2 ± 0.25
	NEF 45W	0.5	1.10	0.22	11.7 ± 0.25
	NEF 80W	0.5	1.25	0.25	11.7 ± 0.25
	NEF 130W	0.5	1.46	0.27	16.8 ± 0.25
	NEF 210W	0.5	1.69	0.31	17.0 ± 0.25
	NEF 340W	0.5	1.86	0.33	21.6 ± 0.25
	NEF 540W	0.5	2.14	0.37	23.9 ± 0.25
	NEF 700W	0.5	2.41	0.46	27.2 ± 0.25
	NEH 09W	0.35	1.68	0.30	19.0 ± 0.25
	NEH 14W	0.25	1.20	0.30	19.0 ± 0.25
	NEH 20W	0.25	1.34	0.33	19.0 ± 0.25
	NEH 30W	0.25	1.50	0.36	21.5 ± 0.25
	NEH 41W	0.25	1.64	0.43	24.0 ± 0.25
	NEH 55W	0.25	1.94	0.50	29.5 ± 0.25
	NEH 70W	0.25	2.05	0.51	31.3 ± 0.25
	NEH 90W	0.25	2.23	0.55	32.0 ± 0.25
	NEH110W	0.25	2.43	0.55	32.5 ± 0.25
	NEH135W	0.25	2.56	0.60	34.0 ± 0.25
	NEH150W	0.25	2.74	0.65	34.5 ± 0.25
	NEH180W	0.25	2.85	0.70	35.5 ± 0.25

② Long spacer type

E : Distance between hub faces
J : Flange face distance

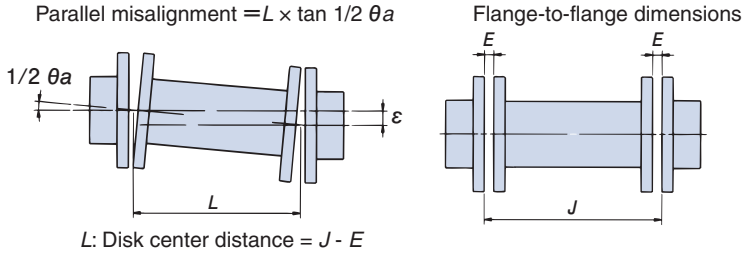

Table 3 Recommended centering value (Long spacer types)

Model No.	Angular misalignment θ a [deg]	Angular misalignment Dial reading T.I.R. [mm]	Parallel misalignment ε [mm]	Hub face distance misalignment E [mm]
NEF 04W	0.5	0.58	$L \times 0.43 \times 10^{-2}$	6.1 ± 0.25
NEF 10W	0.5	0.71	$L \times 0.43 \times 10^{-2}$	6.6 ± 0.25
NEF 18W	0.5	0.81	$L \times 0.43 \times 10^{-2}$	8.3 ± 0.25
NEF 25W	0.5	0.91	$L \times 0.43 \times 10^{-2}$	11.2 ± 0.25
NEF 45W	0.5	1.10	$L \times 0.43 \times 10^{-2}$	11.7 ± 0.25
NEF 80W	0.5	1.25	$L \times 0.43 \times 10^{-2}$	11.7 ± 0.25
NEF 130W	0.5	1.46	$L \times 0.43 \times 10^{-2}$	16.8 ± 0.25
NEF 210W	0.5	1.69	$L \times 0.43 \times 10^{-2}$	17.0 ± 0.25
NEF 340W	0.5	1.86	$L \times 0.43 \times 10^{-2}$	21.6 ± 0.25
NEF 540W	0.5	2.14	$L \times 0.43 \times 10^{-2}$	23.9 ± 0.25
NEF 700W	0.5	2.41	$L \times 0.43 \times 10^{-2}$	27.2 ± 0.25
NEH 09W	0.35	1.68	$L \times 0.31 \times 10^{-2}$	19.0 ± 0.25
NEH 14W	0.25	1.20	$L \times 0.22 \times 10^{-2}$	19.0 ± 0.25
NEH 20W	0.25	1.34	$L \times 0.22 \times 10^{-2}$	19.0 ± 0.25
NEH 30W	0.25	1.50	$L \times 0.22 \times 10^{-2}$	21.5 ± 0.25
NEH 41W	0.25	1.64	$L \times 0.22 \times 10^{-2}$	24.0 ± 0.25
NEH 55W	0.25	1.94	$L \times 0.22 \times 10^{-2}$	29.5 ± 0.25
NEH 70W	0.25	2.05	$L \times 0.22 \times 10^{-2}$	31.3 ± 0.25
NEH 90W	0.25	2.23	$L \times 0.22 \times 10^{-2}$	32.0 ± 0.25
NEH 110W	0.25	2.43	$L \times 0.22 \times 10^{-2}$	32.5 ± 0.25
NEH 135W	0.25	2.56	$L \times 0.22 \times 10^{-2}$	34.0 ± 0.25
NEH 150W	0.25	2.74	$L \times 0.22 \times 10^{-2}$	34.5 ± 0.25
NEH 180W	0.25	2.85	$L \times 0.22 \times 10^{-2}$	35.5 ± 0.25

Relationship between parallel misalignment and angular misalignment for the spacer type coupling

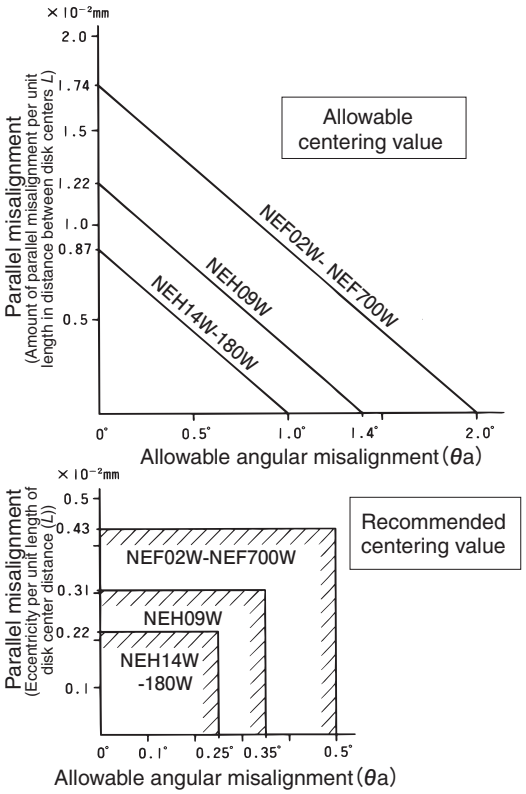

(1) Adjusting the hub-to-hub dimension "*E*"

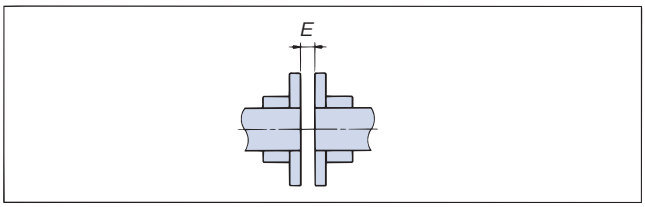

For both the Spacer Type and Single Type couplings, measure dimension "*E*" at four places (at 90° angles), and adjust the hub position so that the average value of dimension "*E*" is within ±0.25 mm.

When a stepped shaft is used for both the drive and driven shafts, the margin for adjustment may be limited. In this case, give consideration in advance so that dimension "*E*" can be adjusted.

(2) Adjusting the angular misalignment (θ °)

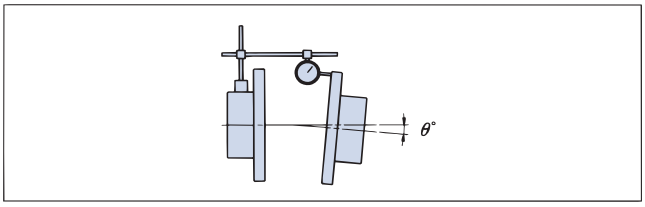

a) With a dial gauge fixed to one of the hubs as shown above, rotate the hub to find the minimum indication on the dial gauge, and set that to "0".
b) Rotate the hub with the dial gauge 360°, and read the value for the angular misalignment.
c) Adjust the equipment by moving it with a shim so that the reading on the dial gauge comes within the recommended angular misalignment range specified in the table on page 61.

(3) Adjusting the parallel misalignment " ε " (mm)

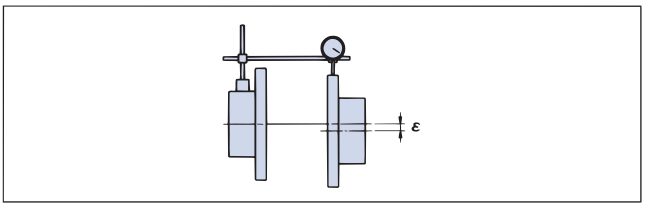

a) With a dial gauge fixed to the hub flange as shown above, rotate the hub to find the minimum indication on the dial gauge, and set that to "0".
b) Rotate the hub with the attached dial gauge 360 degrees, and read the parallel misalignment value.
c) The reading on the dial gauge around the periphery of the hub flange may fluctuate markedly at the hub's drilled bore. This is because the flange is displaced toward the periphery while machining the drilled bore. When reading the dial gauge, disregard the values at such locations.
d) Adjust the equipment by moving it with a shim so that the reading on the dial gauge comes within twice the recommended parallel misalignment (ε) range specified in the table on page 61.
e) If the equipment is moved for the purpose of parallel misalignment adjustment, perform the angular misalignment adjustment procedure once again.

(4) Repeat the above adjustment procedures until all of the coupling's displacement values are acceptable.

(5) Tighten all the U-nuts to the torque specified on the next page. ECHT-FLEX Couplings transmit torque using the frictional force generated between the disk and washer by the U-nut's fastening force. Always use the U-nut tightening torque specified on the next page.

Handling

1. Reamer bolt tightening torques

ECHT-FLEX Couplings transmit power using the frictional force of the reamer bolts and U-nuts.
Tighten the reamer bolts and U-nuts securely with the specified torque.

Tightening torque

Model No.	Reamer bolt tightening torque [N·m]	Reamer bolt size
NEF02	4.90	M 5
NEF04	8.82	M 6
NEF10	8.82	M 6
NEF18	21.6	M 8
NEF25	21.6	M 8
NEF45	41.2	M10
NEF80	78.4	M12
NEF130	78.4	M12
NEF210	177	M16
NEF340	177	M16
NEF540	470	M20
NEF700	657	M24
NEH09	470	M20
NEH14	568	M22
NEH20	784	M24
NEH30	1170	M27
NEH41	1590	M30
NEH55	2250	M36
NEH70	2550	M36
NEH90	3230	M39
NEH110	3920	M42
NEH135	4900	M45
NEH150	5490	M48
NEH180	6860	M52

Type for use with gear couplings

Model No.	Reamer Bolt (A) tightening torque [N·m]	Size of reamer bolt (A)	Reamer bolt (B) tightening torque [N·m]	Size of reamer bolt (B)
NEF45G	41.2	M10	8.82	M 6
NEF80G	78.4	M12	21.6	M 8
NEF130G	78.4	M12	21.6	M 8
NEF210G	177	M16	41.2	M10
NEF340G	177	M16	41.2	M10
NEF540G	470	M20	78.4	M12
NEF700G	657	M24	78.4	M12
NEH09G	470	M20	78.4	M12
NEH14G	568	M22	78.4	M12
NEH20G	784	M24	177	M16
NEH30G	1170	M27	177	M16
NEH41G	1590	M30	470	M20

Distance between two reamer bolt faces

Unit : [mm]

Size	M5	M6	M8	M10	M12	M16	M20	M22	M24
S	8	10	13	17	19	24	30	32	36
Size	M27	M30	M36	M39	M42	M45	M48	M52	
S	41	46	55	60	65	70	75	80	

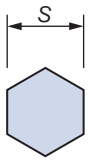

2. Tightening the reamer bolt

When tightening the reamer bolts, be careful not to apply an axial force to the coupling hub.

If an axial force is applied to the hub, the disk may warp and become fixed in that warped state. Tighten the reamer bolts securely with the torque specified in the table above.

- The U-nut is made of metal. It can be mounted and dismounted up to 20 times.
  If you will need to mount and dismount the U-nut more than 20 times, keep a spare U-nut on hand.
- There is no need to apply oil or grease to reamer bolts.

3. Removing the coupling

The Spacer Type coupling can be removed from the shaft without running the drive or driven equipment. This feature considerably simplifies centering adjustment when re-mounting the coupling.

<Removal procedure>

1. Loosen all reamer bolts and remove the disks and spacers. (Fig. 1)
2. Loosen the set bolt that fastens the hub, and then slide the hub off to remove it. (Fig. 2)
3. To re-mount the coupling, perform the above steps in reverse order. After both hubs are mounted to the shaft, it is recommended that you check the centering level to verify the mounting state.

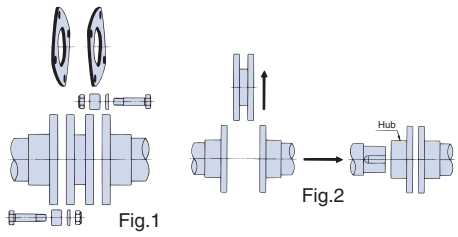

4. Inspection

After operating the equipment for one or two hours, check the angular misalignment and the parallel misalignment once again. At this time, re-tighten the bolts and nuts with the torque specified in the table above.

Once the equipment has been in operation for 6 months or one year, check the reamer bolts and U-nuts for looseness. It is recommended that you mark the reamer bolts and U-nuts at the time of installation so that you can check for looseness later on. Be sure to check for any abnormalities in other components as well.

NES Series ECHT-FLEX® COUPLINGS

NES Series ECHT-FLEX® Couplings

CONTENTS

Features 65
Structure 66
Model Number 66
Transmission Capacity/Dimensions . . 67–72
Keyway Machining Service 73
Product Selection 73
Handling and Shaft Mounting 73

NES Series ECHT-FLEX® Couplings

Low moment of inertia & high torsional stiffness

When low moment of inertia is needed

Low Inertia Hub

With its unique stepped design, the hub achieves the ultimate in low inertia.

When high torsional stiffness is needed

Straight Hub

This model offers exceptionally high torsional stiffness.

For taking advantage of both types

Low Inertia x Straight Hub

This model combines a low inertia hub and straight hub.

Features

Low inertia moment

The hub adopts light-weight and highly durable extra super duralumin. Our original hub geometry is used to achieve a low moment of inertia. This is ideal for high acceleration/deceleration operation of servomotors and other applications.

High torsional stiffness

With its high torsional stiffness and excellent following capacity for servomotors, our straight hub is ideal for precision control applications.

High torque and secure clamping force

The clamping force on shafts is improved by using our original clamp geometry.

Wide lineup of 56 models and 3,252 possible bore combinations

With 56 models and 3,252 possible bore combinations, the low inertia hub type and straight hub type together form a peerless lineup meeting a wide range of needs.

No backlash

All torque is transmitted via friction coupling to eliminate backlash. Together with its high torsional stiffness, this feature makes the NES Series ideal for precision positioning applications.

Easy to install

The hub on both sides is centered using a special jig, and assembled while ensuring concentricity. The NES Series adopts a clamping method for connection with the shaft, allowing the hub to be clamped onto the shaft by simply tightening one clamp bolt on each hub.

Environmentally friendly

The NES Series meets the requirements of RoHS directives, as well as harmful chemical substance regulations of JIG, PFOS, and SVHCs (15 substances).

Example applications

- Coupling with compact servomotors and stepping motors in semiconductor manufacturing equipment
- Coupling with servomotors and ball screws in machine tools
- Industrial robots, electronic devices, precision instruments

Structure

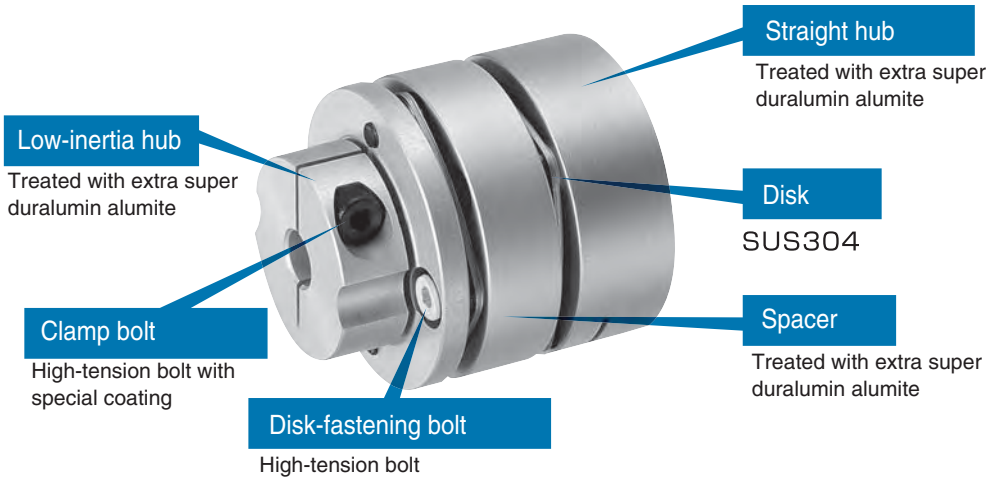

Model Number

Spacer type

NES 30 W - N 10 C X N 12 C

- NES: Series
- 30: Size
- W: Spacer type
- N: Hub type (N : Straight hub / D : Low-inertia hub)
- 10: Bore diameter ('6.3' for 6.35 mm bore diameter, and '9.5' for 9.525 mm bore diameter.)
- C: Clamp type

Note: Place the smaller bore diameter in front.

Single disk type

NES 30 S - N 10 C X N 12 C

- NES: Series
- 30: Size
- S: Single disk type
- N: Hub type (N : Straight hub / D : Low-inertia hub)
- 10: Bore diameter ('6.3' for 6.35 mm bore diameter, and '9.5' for 9.525 mm bore diameter.)
- C: Clamp type

Note: Place the smaller bore diameter in front.

Transmission Capacity/Dimensions

Spacer type: straight hub x straight hub

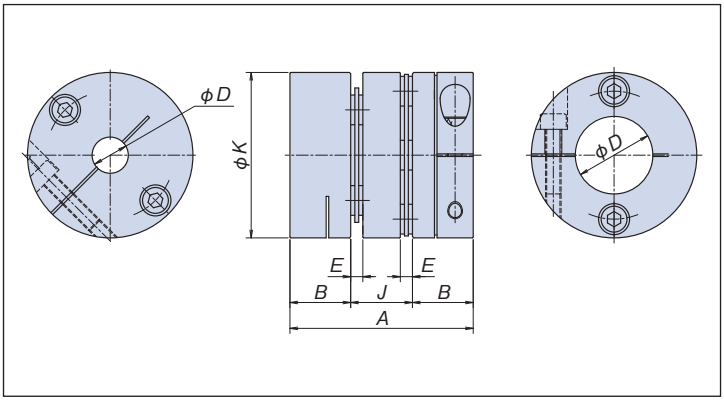

Model No.	Allowable torque N·m {kgf·m}	Note 1) Max. rotation speed r/min	Note 4) Bore diameter φD mm: Range of bore diameters	Note 4) Bore diameter φD mm: Standard bore diameter	Dimensions mm: A	B	E	φK	J	Through shaft allowable max. diameter	Torsional stiffness N·m/rad {kgf·m/rad}: Whole coupling	Disk only	Axial spring constant N/mm {kgf/mm}	Note 3) Allowable misalignment: Angular misalignment deg	Parallel misalignment mm	End play mm	Note 2) Weight g	Note 2) Moment of inertia kg·m²
NES07W	0.7 {0.07}	18000	4 to 6	Refer to the table of standard bore diameter (in the table below).	18.9	7.5	0.85	16	3.9	6	210 {21}	600 {61}	87 {8.9}	1.4	0.05	±0.24	9	0.32×10^{-6}
NES15W	1.5 {0.15}	18000	4 to 8		26	8.9	1.1	19	8.2	6.5	420 {43}	1300 {130}	47 {4.8}	2.0	0.12	±0.36	17	0.90×10^{-6}
NES20W	2.0 {0.20}	18000	5 to 10		31.7	11	1.1	24	9.7	10	1000 {100}	2800 {290}	43 {4.4}	2.0	0.15	±0.60	32	2.7×10^{-6}
NES30W	3.0 {0.31}	18000	6 to 16		35.6	11.8	1.5	31	12	13	1600 {160}	4200 {430}	24 {2.4}	2.0	0.18	±0.80	53	8.0×10^{-6}
NES50W	5.0 {0.51}	18000	6 to 16		40	12.5	1.5	34	15	13	2100 {210}	6500 {660}	25 {2.6}	2.0	0.24	±0.80	76	14×10^{-6}
NES70W	7.0 {0.71}	18000	8 to 20		45.5	15	1.75	37	15.5	16	4600 {470}	9500 {970}	29 {3.0}	2.0	0.24	±0.90	97	21×10^{-6}
NES100W	10 {1.0}	15000	8 to 22		48.1	15.7	2.6	44	16.7	17	6200 {630}	15000 {1500}	33 {3.4}	2.0	0.25	±1.1	160	47×10^{-6}
NES250W	25 {2.6}	10000	10 to 25		59	20	3	55	19	22	11000 {1100}	22000 {2200}	11 {1.1}	2.0	0.28	±1.4	320	140×10^{-6}
NES800W	80 {8.2}	10000	14 to 30		70.9	23.5	4.7	64	23.9	25	23000 {2300}	39000 {4000}	27 {2.8}	2.0	0.34	±1.4	510	320×10^{-6}
NES1300W	130 {13}	10000	20 to 35		97.9	31.5	5.2	82	34.9	35	46000 {4700}	110000 {11000}	33 {3.4}	2.0	0.52	±1.8	1200	1100×10^{-6}
NES2000W	200 {20.4}	9000	25 to 45		98.6	30.5	5.6	92	37.6	45	60000 {6120}	270000 {27600}	43 {4.4}	2.0	0.56	±1.4	1300	1700×10^{-6}
NES3000W	300 {30.6}	8000	35 to 50		102	31.2	7.6	104	39.2	50	68000 {6940}	300000 {30600}	64 {6.5}	2.0	0.55	±1.8	1800	2960×10^{-6}

Notes 1. The maximum rotation speed does not take dynamic balance into consideration.
2. The weight and moment of inertia are the values at maximum bore diameter.
3. Each allowable misalignment is based on the assumption that both of the other two misalignment values are 0 (zero).
4. The columns with values in the table below are the standard bore diameters. The figures indicate transmission torques.
5. Recommended tolerance for mounting shaft is h7. However, shaft diameters of 35 mm support servomotor shafts with a tolerance of $^{+0.010}_{0}$.

Standard bore diameter and transmission torque by bore diameter (N·m)

Model No.	Bolt size	Tightening torque N·m {kgf·m}	Standard bore diameter (mm): 4	5	6	6.35	7	8	9	9.525	10	11	12	14	15	16	17	18	19	20	22	24	25	28	30	32	35	38	40	42	45	48	50
NES07	M2	0.50 {0.04}	0.7	0.7	0.7																												
NES15	M2	0.50 {0.04}	1.3	1.5	1.5	1.5	1.5	1.5																									
NES20	M2.5	1.0 {0.10}		2	2	2	2	2	2	2	2																						
NES30	M2.5	1.0 {0.10}			3	3	3	3	3	3	3	3	3	3	3	3																	
NES50	M3	1.9 {0.19}			5	5	5	5	5	5	5	5	5	5	5	5																	
NES70	M3	1.9 {0.19}						7	7	7	7	7	7	7	7	7	7	7	7	7													
NES100	M4	3.8 {0.39}						10	10	10	10	10	10	10	10	10	10	10	10	10	10												
NES250	M4	3.8 {0.39}									25	25	25	25	25	25	25	25	25	25	25	25	25										
NES800	M6	12 {1.22}												80	80	80	80	80	80	80	80	80	80	80	80								
NES1300	M6	12 {1.22}																		107	118	130	130	130	130	130	130						
NES2000	M8	30 {3.1}																					200	200	200	200	200	200	200	200	200		
NES3000	M8	30 {3.1}																									300	300	300	300	300	300	300

Single disk type: straight hub x straight hub

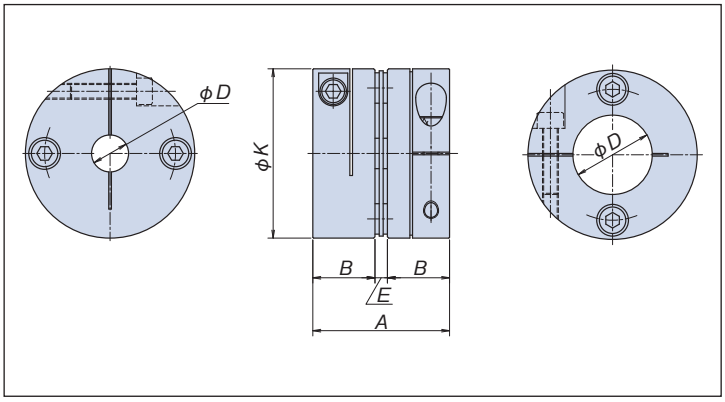

Model No.	Allowable torque N·m {kgf·m}	Note 1) Max. rotation speed r/min	Note 4) Bore diameter φD mm		Dimensions mm				Torsional stiffness N·m/rad {kgf·m/rad}		Axial spring constant N/mm {kgf/mm}	Note 3) Allowable misalignment			Note 2) Weight g	Note 2) Moment of inertia kg·m²
			Range of bore diameters	Standard bore diameter	A	B	E	φK	Whole coupling	Disk only		Angular misalignment deg	Parallel misalignment mm	End play mm		
NES07S	0.7 {0.07}	18000	4 to 6	Refer to the table of standard bore diameter (in the previous page).	15.85	7.5	0.85	16	430 {44}	1200 {120}	170 {17}	0.7	0.02	±0.12	7	0.26×10^{-6}
NES15S	1.5 {0.15}	18000	4 to 8		18.4	8.9	1.1	19	780 {80}	2600 {270}	93 {9.5}	1.0	0.02	±0.18	12	0.63×10^{-6}
NES20S	2.0 {0.20}	18000	5 to 10		23.1	11	1.1	24	1800 {180}	5600 {570}	86 {8.8}	1.0	0.02	±0.30	23	1.9×10^{-6}
NES30S	3.0 {0.31}	18000	6 to 16		25.1	11.8	1.5	31	3700 {380}	8400 {860}	48 {4.9}	1.0	0.02	±0.40	37	5.5×10^{-6}
NES50S	5.0 {0.51}	18000	6 to 16		26.5	12.5	1.5	34	4500 {460}	13000 {1300}	51 {5.2}	1.0	0.02	±0.40	49	8.8×10^{-6}
NES70S	7.0 {0.71}	18000	8 to 20		31.75	15	1.75	37	7400 {760}	19000 {1900}	58 {5.9}	1.0	0.02	±0.45	66	14×10^{-6}
NES100S	10 {1.0}	15000	8 to 22		34	15.7	2.6	44	10000 {1000}	30000 {3000}	65 {6.6}	1.0	0.02	±0.55	110	32×10^{-6}
NES250S	25 {2.6}	10000	10 to 25		43	20	3	55	19000 {1900}	44000 {4500}	21 {2.1}	1.0	0.02	±0.70	220	100×10^{-6}
NES800S	80 {8.2}	10000	14 to 30		51.7	23.5	4.7	64	39000 {4000}	78000 {8000}	52 {5.3}	1.0	0.02	±0.70	350	220×10^{-6}
NES1300S	130 {13}	10000	20 to 35		68.2	31.5	5.2	82	77000 {7900}	220000 {22000}	65 {6.6}	1.0	0.02	±0.90	790	780×10^{-6}
NES2000S	200 {20.4}	9000	25 to 45		66.6	30.5	5.6	92	110000 {11200}	540000 {55100}	67 {6.8}	1.0	0.02	±0.70	880	1140×10^{-6}
NES3000S	300 {30.6}	8000	35 to 50		70	31.2	7.6	104	150000 {15300}	610000 {62200}	85 {8.6}	1.0	0.02	±0.90	1200	1990×10^{-6}

Notes 1. The maximum rotation speed does not take dynamic balance into consideration.
2. The weight and moment of inertia are the values at maximum bore diameter.
3. Each allowable misalignment is based on the assumption that both of the other two misalignment values are 0 (zero).
4. The values in the bottom table on the previous page are standard bore diameters. The figures indicate transmission torques.
5. Recommended tolerance for mounting shaft is h7. However, shaft diameters of 35 mm support servomotor shafts with a tolerance of $^{+0.010}_{0}$.

Transmission Capacity/Dimensions

Spacer type: low inertia hub x low inertia hub

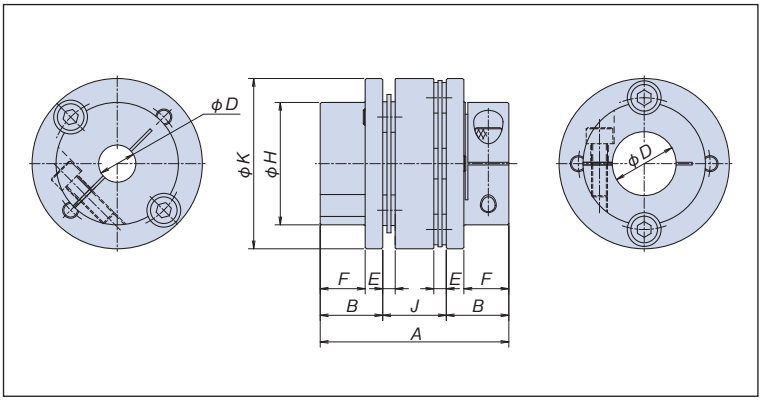

Model No.	Allowable torque N·m {kgf·m}	Note 1) Max. rotation speed r/min	Note 4) Bore diameter φD mm		Dimensions mm								Torsional stiffness N·m/rad {kgf·m/rad}		Axial spring constant N/mm {kgf/mm}	Note 3) Allowable misalignment			Note 2) Weight g	Note 2) Moment of inertia kg·m²
			Range of bore diameters	Standard bore diameter	A	B	E	F	H	φK	J	Through shaft allowable max. diameter	Whole coupling	Disk only		Angular misalignment deg	Parallel misalignment mm	End play mm		
NES50W	5.0 {0.51}	18000	5 to 10	Refer to the table of standard bore diameter (in the table below).	37	12.5	1.5	9.3	21.5	34	12	10	1600 {160}	6500 {660}	25 {2.6}	2.0	0.18	±0.80	52	7.1×10^{-6}
NES70W	7.0 {0.71}	18000	8 to 14		45.5	15	1.75	11.8	26	37	15.5	14	2700 {280}	9500 {970}	29 {3.0}	2.0	0.24	±0.90	76	12.8×10^{-6}
NES100W	10 {1.0}	15000	8 to 15		48.1	15.7	2.6	11.5	29.5	44	16.7	15	4600 {470}	15000 {1500}	33 {3.4}	2.0	0.25	±1.1	125	28.8×10^{-6}
NES250W	25 {2.6}	10000	10 to 20		59	20	3	14.4	38	55	19	20	8400 {860}	22000 {2200}	11 {1.1}	2.0	0.28	±1.4	230	83.1×10^{-6}
NES800W	80 {8.2}	10000	14 to 24		70.9	23.5	4.7	16.9	46	64	23.9	24	17000 {1700}	39000 {4000}	27 {2.8}	2.0	0.34	±1.4	380	188×10^{-6}
NES1300W	130 {13}	10000	19 to 32		97.9	31.5	5.2	22.6	54	82	34.9	32	28000 {2900}	110000 {11000}	33 {3.4}	2.0	0.52	±1.8	810	671×10^{-6}
NES2000W	200 {20.4}	9000	25 to 35		98.6	30.5	5.6	21.6	69	92	37.6	35	46000 {4700}	270000 {27600}	43 {4.4}	2.0	0.56	±1.4	1140	1230×10^{-6}
NES3000W	300 {30.6}	8000	32 to 42		101.6	31.2	7.6	21	79	104	39.2	42	49000 {5000}	300000 {30600}	64 {6.5}	2.0	0.55	±1.8	1580	2230×10^{-6}

Notes 1. The maximum rotation speed does not take dynamic balance into consideration.
2. The weight and moment of inertia are the values at maximum bore diameter.
3. Each allowable misalignment is based on the assumption that both of the other two misalignment values are 0 (zero).
4. The columns with values in the table below are the standard bore diameters. The figures indicate transmission torques.
5. Recommended tolerance for mounting shaft is h7. However, shaft diameters of 35 mm support servomotor shafts with a tolerance of $^{+0.010}_{0}$.

Standard bore diameter and transmission torque by bore diameter (N·m)

Model No.	Bolt size	Tightening torque N·m {kgf·m}	Standard bore diameter (mm)																									
			5	6	6.35	7	8	9	9.525	10	11	12	14	15	16	17	18	19	20	22	24	25	28	30	32	35	38	40	42
NES50	M3	1.9 {0.19}	5	5	5	5	5	5	5	5																			
NES70	M3	1.9 {0.19}					7	7	7	7	7	7	7																
NES100	M4	3.8 {0.39}					10	10	10	10	10	10	10	10															
NES250	M4	3.8 {0.39}								25	25	25	25	25	25	25	25	25	25										
NES800	M6	12 {1.22}											80	80	80	80	80	80	80	80	80								
NES1300	M6	12 {1.22}																105	105	110	115	120	125	130	130				
NES2000	M8	30 {3.1}																				200	200	200	200	200			
NES3000	M8	30 {3.1}																							235	245	255	260	265

Single disk type: low inertia hub x low inertia hub

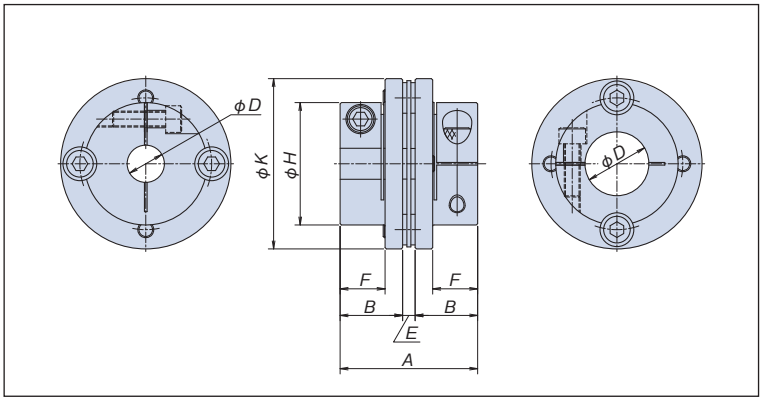

Model No.	Allowable torque N·m {kgf·m}	Note 1) Max. rotation speed r/min	Note 4) Bore diameter φD mm		Dimensions mm						Torsional stiffness N·m/rad {kgf·m/rad}		Axial spring constant N/mm {kgf/mm}	Note 3) Allowable misalignment			Note 2) Weight g	Note 2) Moment of inertia kg·m²
			Range of bore diameters	Standard bore diameter	A	B	E	F	H	φK	Whole coupling	Disk only		Angular misalignment deg	Parallel misalignment mm	End play mm		
NES50S	5.0 {0.51}	18000	5 to 10	Refer to the table of standard bore diameter (in the previous page).	26.5	12.5	1.5	9.3	21.5	34	2700 {280}	13000 {1300}	51 {5.2}	1.0	0.02	±0.40	34	3.9×10^{-6}
NES70S	7.0 {0.71}	18000	8 to 14		31.75	15	1.75	11.8	26	37	3500 {360}	19000 {1900}	58 {5.9}	1.0	0.02	±0.45	46	6.8×10^{-6}
NES100S	10 {1.0}	15000	8 to 15		34	15.7	2.6	11.5	29.5	44	6400 {650}	30000 {3000}	65 {6.6}	1.0	0.02	±0.55	78	15.9×10^{-6}
NES250S	25 {2.6}	10000	10 to 20		43	20	3	14.4	38	55	12000 {1200}	44000 {4500}	21 {2.1}	1.0	0.02	±0.70	150	45.6×10^{-6}
NES800S	80 {8.2}	10000	14 to 24		51.7	23.5	4.7	16.9	46	64	25000 {2600}	78000 {8000}	52 {5.3}	1.0	0.02	±0.70	250	114×10^{-6}
NES1300S	130 {13}	10000	19 to 32		68.2	31.5	5.2	22.6	54	82	37000 {3800}	220000 {22000}	65 {6.6}	1.0	0.02	±0.90	490	367×10^{-6}
NES2000S	200 {20.4}	9000	25 to 35		66.6	30.5	5.6	21.6	69	92	71000 {7200}	540000 {55100}	67 {6.8}	1.0	0.02	±0.70	700	670×10^{-6}
NES3000S	300 {30.6}	8000	32 to 42		70	31.2	7.6	21	79	104	81000 {8300}	610000 {62200}	85 {8.6}	1.0	0.02	±0.90	980	1260×10^{-6}

Notes 1. The maximum rotation speed does not take dynamic balance into consideration.
2. The weight and moment of inertia are the values at maximum bore diameter.
3. Each allowable misalignment is based on the assumption that both of the other two misalignment values are 0 (zero).
4. The values in the bottom table on the previous page are standard bore diameters. The figures indicate transmission torques.
5. Recommended tolerance for mounting shaft is h7. However, shaft diameters of 35 mm support servomotor shafts with a tolerance of $^{+0.010}_{0}$.

Transmission Capacity/Dimensions

Spacer type: low inertia hub x straight hub

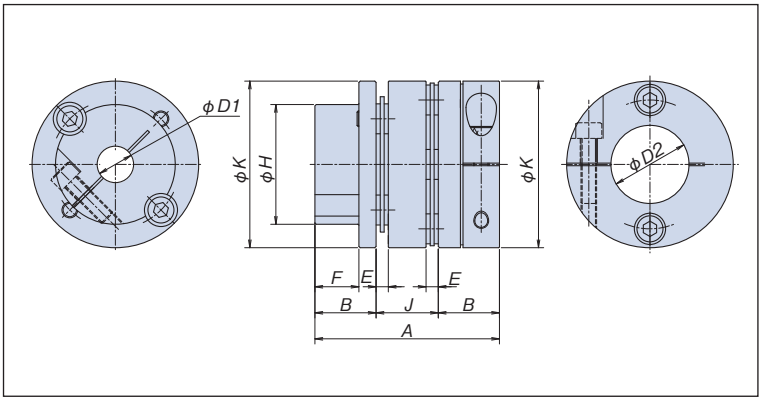

Model No.	Allowable torque N·m {kgf·m}	Note 1) Max. rotation speed r/min	Note 4) Bore diameter φD1 mm		Note 4) Bore diameter φD2 mm		Dimensions mm								Torsional stiffness N·m/rad {kgf·m/rad}	Axial spring constant N/mm {kgf/mm}	Note 3) Allowable misalignment			Note 2) Weight g	Note 2) Moment of inertia kg·m²
			Range of bore diameters	Standard bore diameter	Range of bore diameters	Standard bore diameter	A	B	E	F	H	φK	J	Through shaft allowable max. diameter	Disk only		Angular misalignment deg	Parallel misalignment mm	End play mm		
NES50W	5.0 {0.51}	18000	5 to 10	Refer to the table of standard bore diameter (in the table below).	6 to 16	Refer to the table of standard bore diameter (in the next page).	37	12.5	1.5	9.3	21.5	34	12	13	6500 {660}	25 {2.6}	2.0	0.18	±0.80	59	9.2×10^{-6}
NES70W	7.0 {0.71}	18000	8 to 14		8 to 20		45.5	15	1.75	11.8	26	37	15.5	16	9500 {970}	29 {3.0}	2.0	0.24	±0.90	85	16.1×10^{-6}
NES100W	10 {1.0}	15000	8 to 15		8 to 22		48.1	15.7	2.6	11.5	29.5	44	16.7	17	15000 {1500}	33 {3.4}	2.0	0.25	±1.1	140	35.8×10^{-6}
NES250W	25 {2.6}	10000	10 to 20		10 to 25		59	20	3	14.4	38	55	19	22	22000 {2200}	11 {1.1}	2.0	0.28	±1.4	260	105×10^{-6}
NES800W	80 {8.2}	10000	14 to 24		14 to 30		70.9	23.5	4.7	16.9	46	64	23.9	25	39000 {4000}	27 {2.8}	2.0	0.34	±1.4	430	235×10^{-6}
NES1300W	130 {13}	10000	19 to 32		20 to 35		97.9	31.5	5.2	22.6	54	82	34.9	35	110000 {11000}	33 {3.4}	2.0	0.52	±1.8	950	860×10^{-6}
NES2000W	200 {20.4}	9000	25 to 35		25 to 45		98.6	30.5	5.6	21.6	69	92	37.6	45	270000 {27600}	43 {4.4}	2.0	0.56	±1.4	1230	1450×10^{-6}
NES3000W	300 {30.6}	8000	32 to 42		35 to 50		101.6	31.2	7.6	21	79	104	39.2	50	300000 {30600}	64 {6.5}	2.0	0.55	±1.8	1700	2560×10^{-6}

Notes 1. The maximum rotation speed does not take dynamic balance into consideration.
2. The weight and moment of inertia are the values at maximum bore diameter.
3. Each allowable misalignment is based on the assumption that both of the other two misalignment values are 0 (zero).
4. The columns with values in the table below are the standard bore diameters. The figures indicate transmission torques.
5. Recommended tolerance for mounting shaft is h7. However, shaft diameters of 35 mm support servomotor shafts with a tolerance of $^{+0.010}_{0}$.

Standard bore diameter and transmission torque by bore diameter (N·m)
Low inertia hub (φD1)

Model No.	Bolt size	Tightening torque N·m {kgf·m}	Standard bore diameter φD1 (mm)																									
			5	6	6.35	7	8	9	9.525	10	11	12	14	15	16	17	18	19	20	22	24	25	28	30	32	35	38	40	42
NES50	M3	1.9 {0.19}	5	5	5	5	5	5	5	5																			
NES70	M3	1.9 {0.19}					7	7	7	7	7	7	7																
NES100	M4	3.8 {0.39}					10	10	10	10	10	10	10	10															
NES250	M4	3.8 {0.39}								25	25	25	25	25	25	25	25	25	25										
NES800	M6	12 {1.22}											80	80	80	80	80	80	80	80	80								
NES1300	M6	12 {1.22}																105	105	110	115	120	125	130	130				
NES2000	M8	30 {3.1}																				200	200	200	200	200			
NES3000	M8	30 {3.1}																							235	245	255	260	265

Single disk type: low inertia hub x straight hub

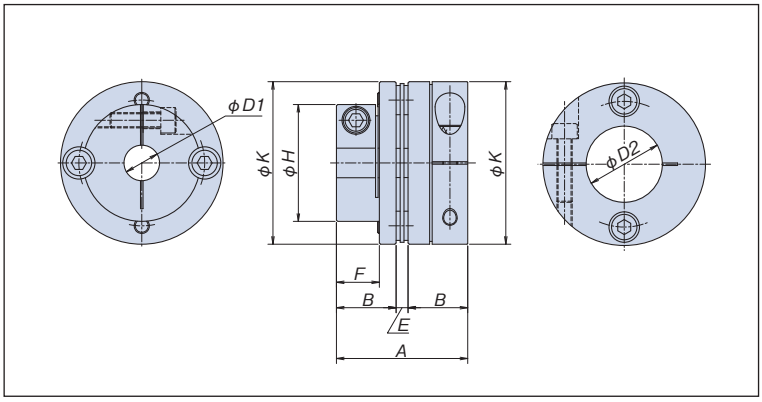

Model No.	Allowable torque N·m {kgf·m}	Note 1) Max. rotation speed r/min	Note 4) Bore diameter φD1 mm		Note 4) Bore diameter φD2 mm		Dimensions mm						Torsional stiffness N·m/rad {kgf·m/rad}	Axial spring constant N/mm {kgf/mm}	Note 3) Allowable misalignment			Note 2) Weight g	Note 2) Moment of inertia kg·m²
			Range of bore diameters	Standard bore diameter	Range of bore diameters	Standard bore diameter	A	B	E	F	H	φK	Disk only		Angular misalignment deg	Parallel misalignment mm	End play mm		
NES50S	5.0 {0.51}	18000	5 to 10	Refer to the table of standard bore diameter (in the previous page).	6 to 16	Refer to the table of standard bore diameter (in the table below).	26.5	12.5	1.5	9.3	21.5	34	13000 {1300}	51 {5.2}	1.0	0.02	±0.40	41	6 ×10⁻⁶
NES70S	7.0 {0.71}	18000	8 to 14		8 to 20		31.75	15	1.75	11.8	26	37	19000 {1900}	58 {5.9}	1.0	0.02	±0.45	55	10.1×10⁻⁶
NES100S	10 {1.0}	15000	8 to 15		8 to 22		34	15.7	2.6	11.5	29.5	44	30000 {3000}	65 {6.6}	1.0	0.02	±0.55	91	22.9×10⁻⁶
NES250S	25 {2.6}	10000	10 to 20		10 to 25		43	20	3	14.4	38	55	44000 {4500}	21 {2.1}	1.0	0.02	±0.70	180	70.7×10⁻⁶
NES800S	80 {8.2}	10000	14 to 24		14 to 30		51.7	23.5	4.7	16.9	46	64	78000 {8000}	52 {5.3}	1.0	0.02	±0.70	300	160 ×10⁻⁶
NES1300S	130 {13}	10000	19 to 32		20 to 35		68.2	31.5	5.2	22.6	54	82	220000 {22000}	65 {6.6}	1.0	0.02	±0.90	630	556 ×10⁻⁶
NES2000S	200 {20.4}	9000	25 to 35		25 to 45		66.6	30.5	5.6	21.6	69	92	540000 {55100}	67 {6.8}	1.0	0.02	±0.70	790	887 ×10⁻⁶
NES3000S	300 {30.6}	8000	32 to 42		35 to 50		70	31.2	7.6	21	79	104	610000 {62200}	85 {8.6}	1.0	0.02	±0.90	1100	1600 ×10⁻⁶

Notes 1. The maximum rotation speed does not take dynamic balance into consideration.
2. The weight and moment of inertia are the values at maximum bore diameter.
3. Each allowable misalignment is based on the assumption that both of the other two misalignment values are 0 (zero).
4. The columns with values in the table below are the standard bore diameters. The figures indicate transmission torques.
5. Recommended tolerance for mounting shaft is h7. However, shaft diameters of 35 mm support servomotor shafts with a tolerance of $^{+0.010}_{0}$.

Standard bore diameter and transmission torque by bore diameter (N·m)
Straight hub (φD2)

Model No.	Bolt size	Tightening torque N·m {kgf·m}	Standard bore diameter φD2 (mm)																												
			6	6.35	7	8	9	9.525	10	11	12	14	15	16	17	18	19	20	22	24	25	28	30	32	35	38	40	42	45	48	50
NES50	M3	1.9 {0.19}	5	5	5	5	5	5	5	5	5	5	5	5																	
NES70	M3	1.9 {0.19}				7	7	7	7	7	7	7	7	7	7	7	7	7													
NES100	M4	3.8 {0.39}				10	10	10	10	10	10	10	10	10	10	10	10	10	10												
NES250	M4	3.8 {0.39}							25	25	25	25	25	25	25	25	25	25	25	25	25										
NES800	M6	12 {1.22}										80	80	80	80	80	80	80	80	80	80	80	80								
NES1300	M6	12 {1.22}																107	118	130	130	130	130	130	130						
NES2000	M8	30 {3.1}																			200	200	200	200	200	200	200	200	200		
NES3000	M8	30 {3.1}																							300	300	300	300	300	300	300

Keyway Machining Service

A keyway type (clamp + keyway) and a type with an adapter for tapered shafts can also be manufactured. Contact us for more information.

Product Selection

See page 59 for the product selection.

Handling and Shaft Mounting

1. Handling the coupling

Read the instruction manual carefully to understand the proper method of handling couplings. Since NES Series ECHT-FLEX couplings are delivered as a completed assembly (finished bore), the coupling can be directly mounted to your equipment. Mount the coupling to the shaft according to the following procedure.
When mounting the coupling, be careful not to apply excess force to the coupling, and be sure not to drop the coupling.
Never loosen the hexagon socket head bolt that fastens the disk.
The operating temperature range is –30 to 100°C.

2. Mounting the coupling to a shaft

(1) Use a cloth to wipe any dust and oil completely off the surface of the target shaft and the coupling mounting surface.

(2) Center the shaft to mount the coupling on, then attach the coupling to it. When attaching the coupling, insert the shaft all the way to the clamp hub end face.
The coupling's allowable angular misalignment, allowable parallel misalignment and allowable end play (shaft direction displacement) are all correlated to each other. Increasing one factor decreases the others, so the factors need to be considered together. Perform the centering adjustment while referring to the following instructions.

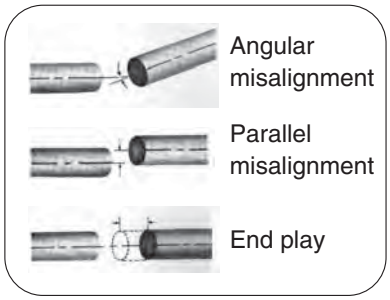

<When using the spacer type>

Convert the parallel misalignment into an angular misalignment (Graph 1).
Apply the total of the converted value and angular misalignment to the angular misalignment shown in Graph 2.
Adjust the centering condition so that the misalignment does not exceed the range specified for each size.

(Graph 1) Spacer type

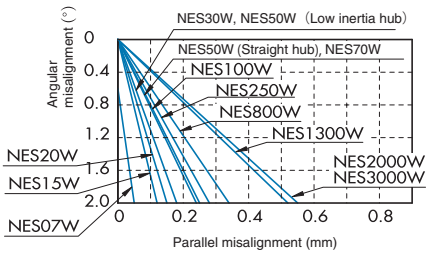

(Graph 2) Spacer type

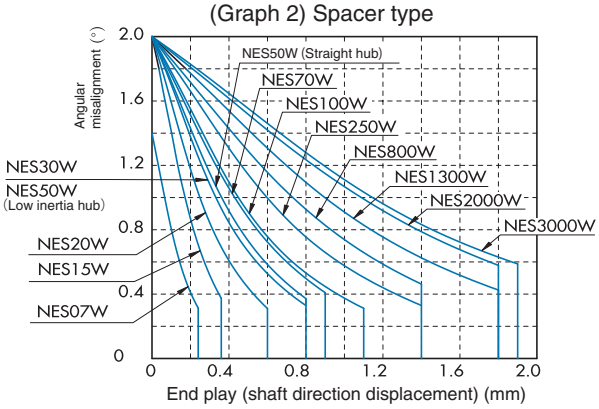

<When using the single disk type>

The single disk type can only absorb a very small amount of parallel misalignment, so should be centered mainly by adjusting the angular misalignment and end play (shaft direction displacement).
Graph 3 shows the correlation between a coupling's allowable angular misalignment and allowable end play (shaft direction displacement).
Adjust the centering condition so that the misalignment does not exceed the range specified for each size.

(Graph 3) Single disk type

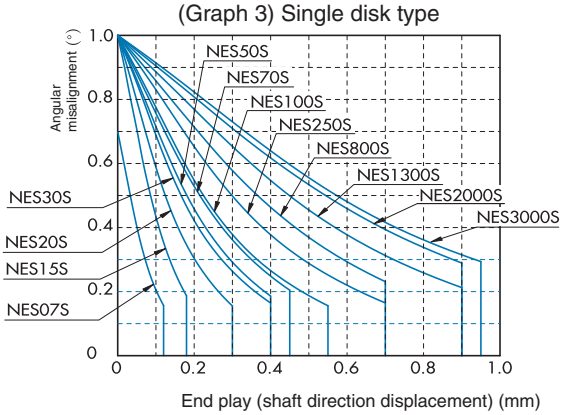

(3) Make sure that the mounted coupling can be moved in the rotating and axial directions with only a light force when the clamp bolt is loosened. If the coupling cannot be moved smoothly, re-adjust the centering condition in Step (2).

(4) Tighten clamp bolts to the tightening torques shown in the table below.

Model No.	NES07	NES15	NES20	NES30	NES50	NES70	NES100	NES250	NES800	NES1300	NES2000	NES3000
Clamp bolt size	M2	M2	M2.5	M2.5	M3	M3	M4	M4	M6	M6	M8	M8
Tighteningtorque N·m {kgf·m}	0.50 {0.05}	0.50 {0.05}	1.0 {0.10}	1.0 {0.10}	1.9 {0.19}	1.9 {0.19}	3.8 {0.39}	3.8 {0.39}	12 {1.22}	12 {1.22}	30 {3.1}	30 {3.1}

POWER RIGID COUPLINGS

Power Rigid Couplings

CONTENTS

Features 75
Structure 75
Model Number 75
Transmission Capacity/Dimensions. . . 76, 77
Product Selection 78
Handling 79

Power Rigid Couplings

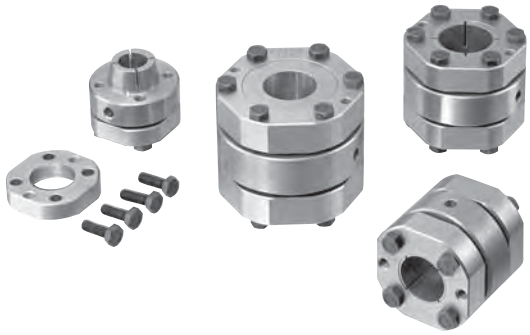

Tsubaki's Power Rigid Couplings are rigid couplings for machine tools. They use a Taper-Lock structure to achieve highly reliable coupling.
To satisfy today's wide range of user demands for faster, more precise and lower-cost machine tools, they provide high torsional stiffness, low moment of inertia and low cost.
The couplings can be mounted from either side, enabling faster centering and mounting.

Features

High torsional stiffness
No flexible element, creating high rigidity.

Dependable coupling
The use of a Taper-Lock coupling method creates higher shaft coupling force.

Backlash-free
The Taper-Locks are friction couplings, eliminating backlash.

Compact
Length in the shaft direction has been minimized, enabling a compact design.

Low cost
The simple structure and standardized parts greatly reduce cost.

Easy mounting
Mounted using bolts from both directions, enabling mounting of one side at a time and rapid centering.

Standardized product
Machined bore products are standard. Combinations with non-stock bore diameters can also be provided.

Low moment of inertia
The outer rings have been given a polygonal shape, reducing the moment of inertia.

Structure

Straight shaft type

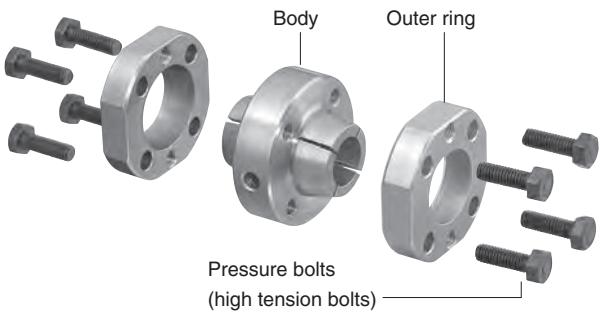

Tapered shaft type

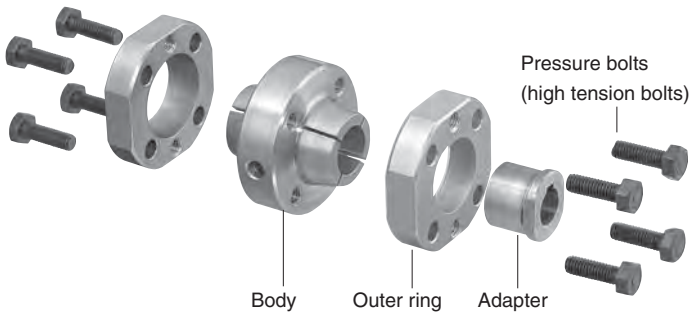

Model Number

Straight shaft type

EPR 50 - 16 X 20

- EPR: Power Rigid Coupling
- 50: Outer diameter (mm)
- 16: Bore diameter (mm)
- 20: Bore diameter (mm)

Tapered shaft type

EPR 50 - 16 X 11T

- EPR: Power Rigid Coupling
- 50: Outer diameter (mm)
- 16: Bore diameter (mm)
- 11T: Tapered bore diameter (mm)

Transmission Capacity/Dimensions

Straight shaft type

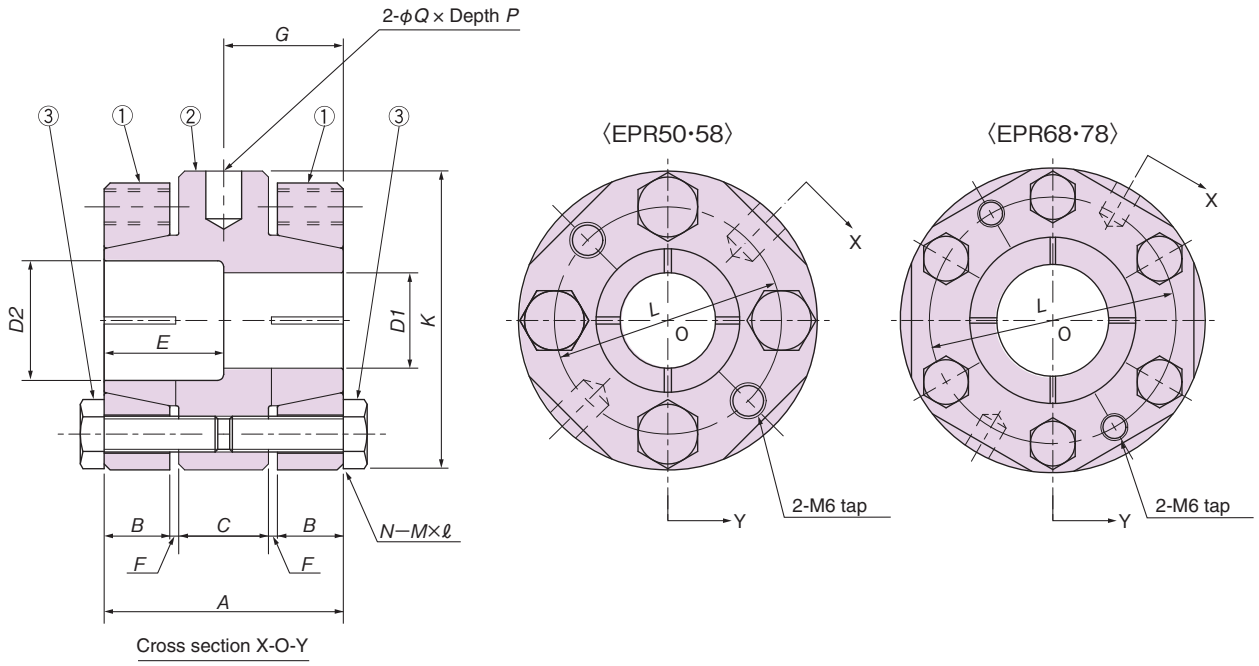

(1) Outer rings (2) Body (3) Pressure bolts

Unit: [mm]

Model No.	Allowable torque* (see Note 1) N·m{kgf·m}	Maximum rotation speed r/min	Maximum bore diameter	Minimum bore diameter	Moment of inertia kg·m²	Weight kg
EPR50- □□×□□	90{ 9.2} to 139{14.2}	15000	22	16	1.53×10^{-4}	0.43
EPR58- □□×□□	78{ 8.0} to 188{19.2}	13000	25	18	3.80×10^{-4}	0.79
EPR68- □□×□□	144{14.7} to 454{46.3}	12000	35	22	6.77×10^{-4}	0.97
EPR78- □□×□□	176{18.0} to 489{49.9}	9500	48	30	13.13×10^{-4}	1.29

Model No.	A	B	C	E	F	G	K	L	M	ℓ	N count	P	Q
EPR50- □□×□□	40	11	15	20	1.5	20	50	38	M6	19	4	8	6
EPR58- □□×□□	52	15	19	26	1.5	26	58	45	M6	25	4	8	6
EPR68- □□×□□	52	15	19	26	1.5	26	68	55	M6	25	6	8	6
EPR78- □□×□□	62	18	22	31	2	31	78	66	M6	30	6	8	6

Standard bore combinations

Unit: [mm]

Model No.	Standard bore diameters D1 × D2						
EPR50- □□×□□	**16×16**	**16×20**	**20×20**	**20×22**	—	—	—
EPR58- □□×□□	**20×25**	**22×25**	**25×25**	—	—	—	—
EPR68- □□×□□	**25×30**	**30×30**	**25×35**	**28×35**	**30×35**	**32×35**	**35×35**
EPR78- □□×□□	Modified from pilot bore products.						

Notes 1. (*) The allowable torque is determined by the bore diameter. See page 78.
2. Non-stock bore diameter combinations can also be provided. Inquire for information.
3. The maximum rotation speed is determined by the coupling's transmission capacity. Balance adjustment has not been performed.
4. Weight and moment of inertia values apply to maximum bore diameters.
5. The blank squares before and after the × symbol in model numbers indicate the left and right bore diameters.
6. Model numbers in bold indicate standard products.

Transmission Capacity/Dimensions

Tapered shaft type

A type for use with tapered-shaft servomotors. Uses an adapter for tapered shafts of 11 or 16 mm in diameter.

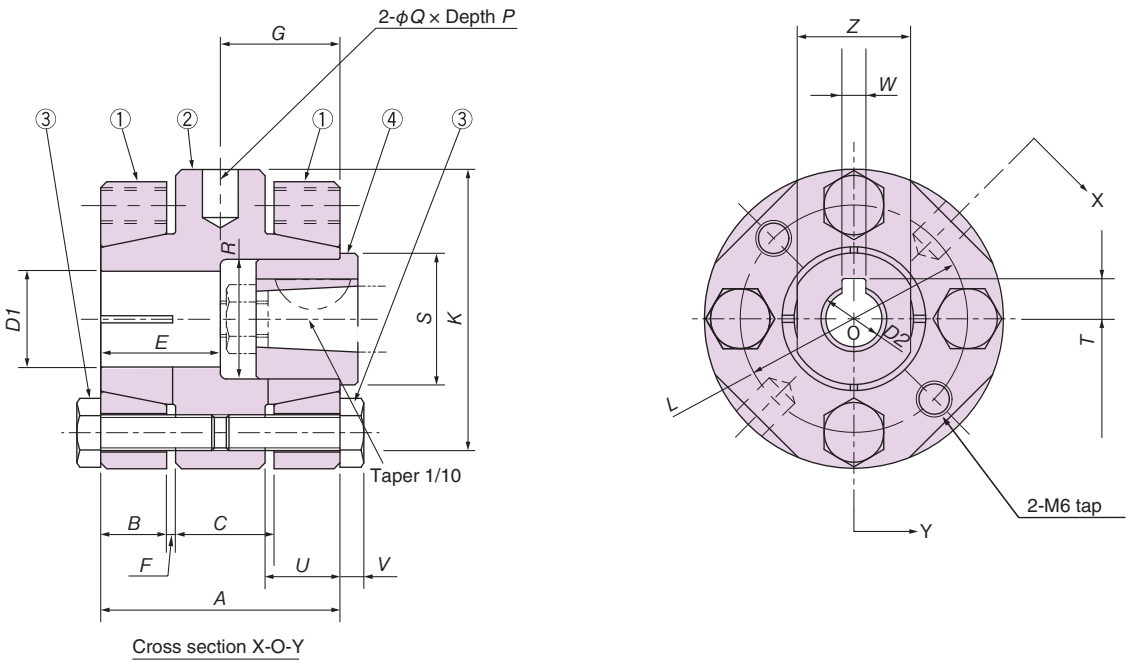

(1) Outer rings (2) Body (3) Pressure bolts (4) Adapter

Unit: [mm]

Model No.	Allowable torque* (see Note 1) N·m{kgf·m}	Maximum rotation speed r/min	Maximum bore diameter	Minimum bore diameter	Moment of inertia kg·m²	Weight kg
EPR50- □□ × **11T**	90{9.2} to 139{14.2}	15000	22	16	1.55×10^{-4}	0.47
EPR58- □□ × **16T**	78{8.0} to 188{19.2}	13000	25	18	3.89×10^{-4}	0.88

Model No.	A	B	C	E	F	G	K	L	M	ℓ	N count	P	G
EPR50- □□ × **11T**	40	11	15	20	1.5	20	50	38	M6	19	4	8	6
EPR58- □□ × **16T**	52	15	19	26	1.5	26	58	45	M6	25	4	8	6

Model No.	R	S	T	U	V	WE9	Z
EPR50- □□ × **11T**	20	22	6.7	14	3	4	19
EPR58- □□ × **16T**	25	27	9.4	15	14	5	24

Standard bore combinations

Unit: [mm]

Model No.	Standard bore diameters *D1* × *D2* (tapered bore diameters)		
EPR50- □□ × **11T**	**16** × **11T** (φ 11 taper)	**20** × **11T** (φ 11 taper)	**22** × **11T** (φ 11 taper)
EPR58- □□ × **16T**	**20** × **16T** (φ 16 taper)	**22** × **16T** (φ 16 taper)	**25** × **16T** (φ 16 taper)

Notes 1. (*) The allowable torque is determined by the bore diameter. See page 78.
2. Model numbers in bold indicate standard products. Special bore diameter combinations can also be provided. Inquire for information.
3. The maximum rotation speed is determined by the coupling's transmission capacity. Balance adjustment has not been performed.
4. Weight and moment of inertia values apply to maximum bore diameters.
5. The blank squares in model numbers indicate the bore diameter for a straight shaft.

Product Selection

Taper-Lock tightening torques and transmitted torques

Bore diameter \ Model No.	Taper-Lock transmitted torque N·m{kgf·m}			
Model No.	EPR50	EPR58	EPR68	EPR78
Pressure bolts	M6	M6	M6	M6
Tighteningtorque N·m{kgf·m}	16.7{1.7}	16.7{1.7}	16.7{1.7}	16.7{1.7}
16	**90 { 9.2}**	—	—	—
17	98 {10.0}	—	—	—
18	106 {10.8}	78 { 8.0}	—	—
19	115 {11.7}	94 { 9.6}	—	—
20	**123 {12.5}**	**110 {11.2}**	—	—
22	**139 {14.2}**	**141 {14.4}**	144 {14.7}	—
24	—	172 {17.6}	191 {19.5}	—
25	—	**188 {19.2}**	**216 {22.0}**	—
28	—	—	**287 {29.3}**	—
30	—	—	**334 {34.1}**	176 {18.0}
32	—	—	**382 {39.0}**	212 {21.6}
35	—	—	**454 {46.3}**	264 {26.9}
36	—	—	—	281 {28.7}
38	—	—	—	316 {32.2}
40	—	—	—	351 {35.8}
42	—	—	—	385 {39.3}
45	—	—	—	437 {44.6}
48	—	—	—	489 {49.9}

Note: Values in bold are standard bore diameters. See pages 76 and 77 for the bore diameter combinations.

Product Selection

Torque capacity

Calculate the maximum torque (Tmax) by multiplying the maximum torque of the servomotor in use (T′max) by the service factor for the load created by motor start/stop.

Check the calculated value against the Taper-Lock transmitted torque.

Tmax = T′max × Service factor (SF)

Tmax : Maximum torque applied to coupling [N·m] {kgf·m}

T'max : Servomotor's maximum torque [N·m] {kgf·m}

SF : Service factor

Shock factor	Uniform load	Moderately variable load	Highly variable load
SF	1.2	1.4	1.5

Mounting example

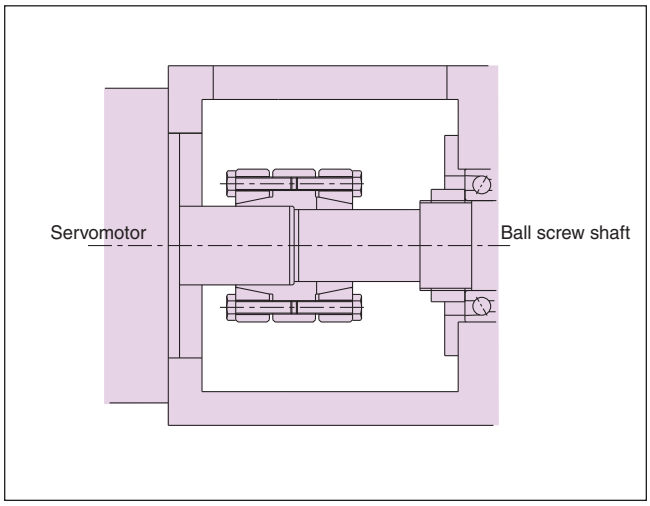

Related product

SJ Type Power Rigid Couplings

● A Power Rigid Coupling type in which pressure bolts are attached on one side only, instead of on both sides as in the standard Power Rigid Coupling type.

Handling

Mounting

Clean the shaft surfaces and body inner circumferences by wiping them off, then apply a thin coating of oil to the parts.

1. Mounting shaft tolerance

The table below shows the tolerances of shafts on which Power Rigid Couplings are mounted.

Mounting shaft diameter	ϕ 35	Other
Recommended tolerance	$\begin{pmatrix}+0.010\\-0.010\end{pmatrix}$	h6 or h7

Servomotor shaft diameters of 35 mm have a tolerance of $\left(^{+0.01}_{0}\right)$.
The coupling bore tolerance is therefore matched to this value.
Note that both bore tolerances are the same even for ball screw shaft diameters of 35 mm.

2. Centering

(1) Attach the coupling to one shaft, and fasten the outer ring as described in the product's user manual.

(2) Leave the outer ring for the other shaft unfastened. This shaft is allowed to rotate freely within the coupling's bore.

(3) Fasten the dial gauge to the base (such as the coupling case), and check the runout of each shaft as described below.

a. Check the runout of the shaft with the connected coupling by placing the dial gauge against the outer circumference of the center flange in the body of the coupling. Rotate this shaft and read the runout. Adjust the runout to within 3/100 (Figure 1).

b. Next, place the dial gauge against the other shaft. Rotate the shaft and read the runout. Adjust the runout to within 3/100.

(4) Check that both runout values shown by the dial gauge are within the standard value, then fasten the second outer ring as described in the product's user manual.

(5) Finally, read the runout of the body's flanges, and check that it is within 3/100.

Recommended centering precision

Dial gauge at body outer circumference
3/100 mm or less

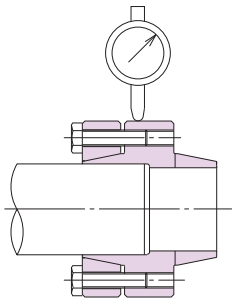

Figure 1

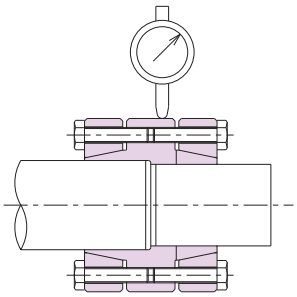

Figure 2

3. Fastening pressure bolts

To fasten the pressure bolts, first fasten them finger-tight, then gradually tighten the diagonally opposing bolts (Figure 3). Finally, use a torque wrench to tighten them to the specified tightening torque of 16.7 N·m {1.70 kgf·m}.
When tightening the pressure bolts, place the dial gauge against the body outer circumference and tighten so that the runout value shown by the gauge is as close to 0 as possible (Figure 2).
Inserting a locking bar into a drilled hole on the body outer circumference to hold the coupling will make the procedure easier (Figure 4).

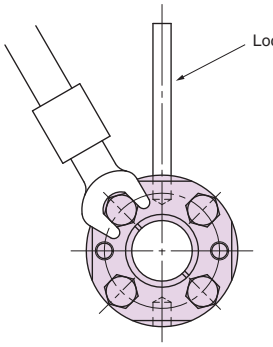

Figure 3

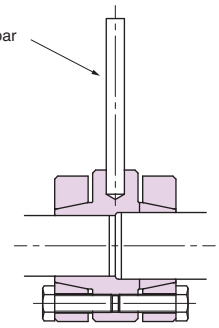

Figure 4

4. Removal

Loosening the pressure bolts releases the Taper-Lock's attachment. If the coupling is stuck, it can be removed by fastening pressure bolts to the outer ring's removal taps (two) (Figure 5).

5. Inspection

After mounting the coupling, perform trial operation and check for any abnormal vibrations, noise or other problems. Also check for any pressure bolt looseness.

6. Maintenance

Check the mounting state once or twice a year. Take immediate steps to remedy any problems discovered.

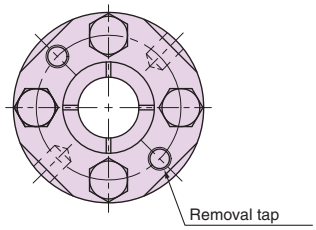

Figure 5

L / LN Series JAW-FLEX COUPLINGS

Jaw-Flex Couplings

CONTENTS

LN Series 81–84
- Features 81
- Structure 82
- Model Number 82
- Transmission Capacity 82
- Dimensions 83
- Product Selection 84
- Handling 84

L Series 85–93
- Features 85
- Structure 86
- Model Number 86
- Transmission Capacity/Dimensions . . . 87–90
- Product Selection 91
- Handling 92, 93

LN Series Jaw-Flex Couplings

High precision couplings with outstanding vibration damping characteristics

The LN Series of Jaw-Flex Couplings have spiders made of a new material that provides outstanding vibration damping characteristics not found in conventional products.
In addition to the clamp type, the lineup also includes a Taper-Lock type suited to high-speed operation.

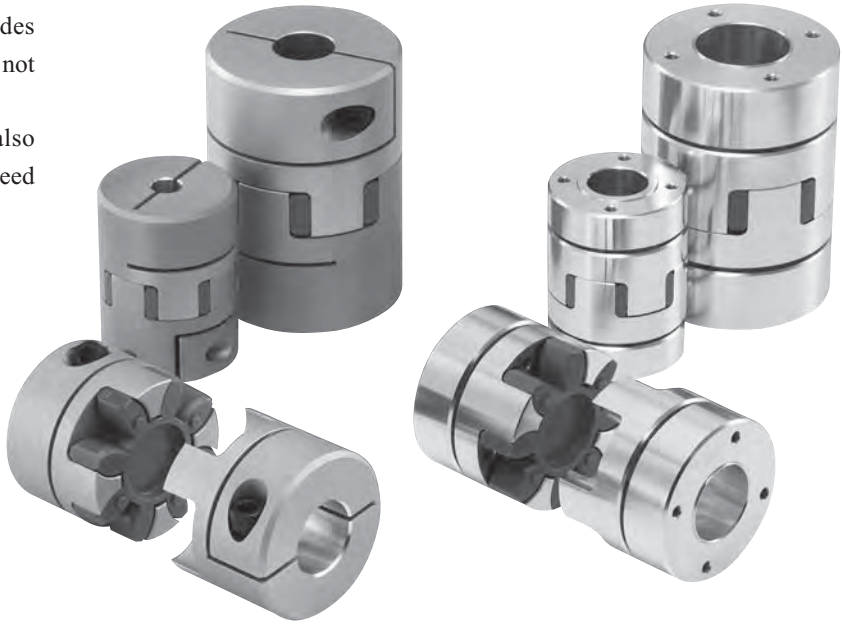

Features

- Resistant to servomotor drive vibrations; outstanding shock-absorption ability when starting or stopping operation.
- An optimum spider-hub combination enables backlash-free torque transmission in a Jaw-Flex Coupling.
- Two types of spider are available. 98A has outstanding vibration damping performance. 64D has high torsional stiffness and very good wear resistance.
- The simple structure consists of two hubs and one spider.
- Two hub types are available. The easy-mounting clamp hub can be coupled to a shaft with a single bolt. The Taper-Lock hub provides large shaft coupling force, and has a well-balanced design.

■ Example comparison of vibration damping characteristics
(model LN28U98A1 and equivalent competitor product)

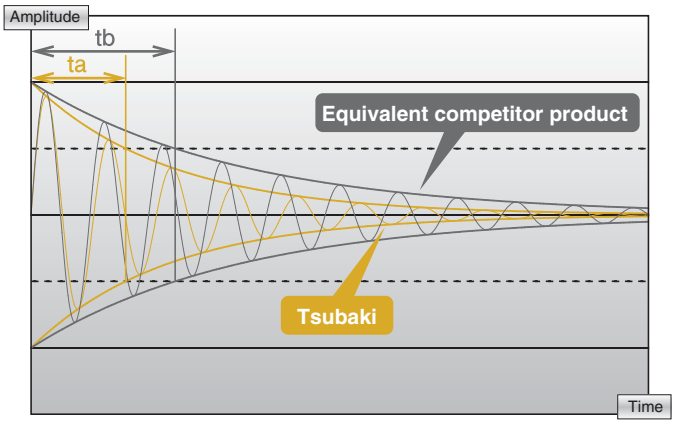

Structure

Clamp type

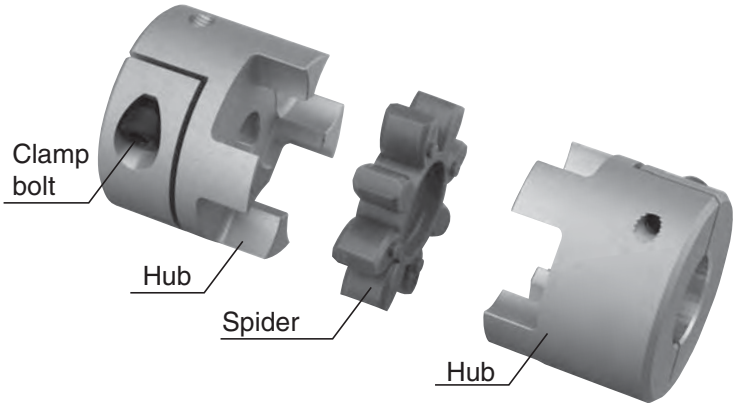

Taper-Lock type

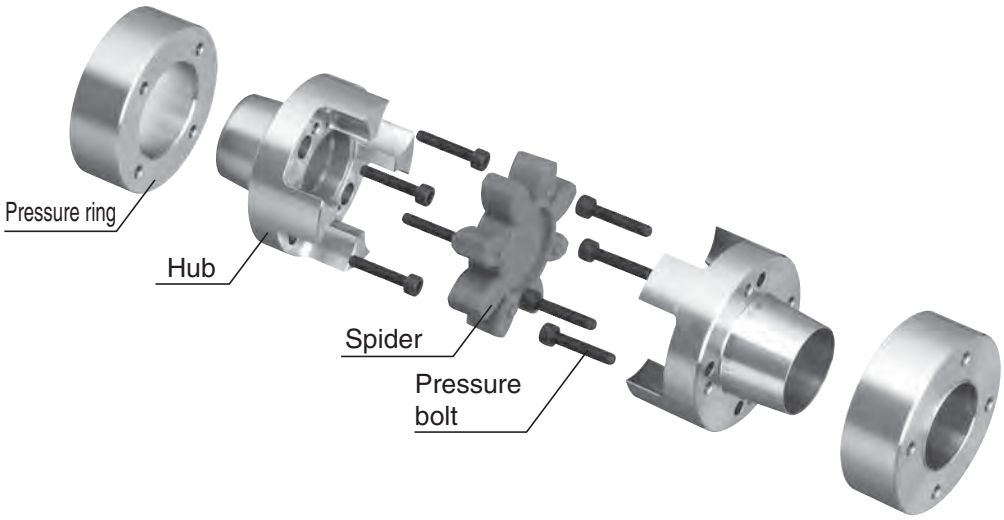

Model Number

LN 24 U 98A1 – A 15 C × A 20 C

- LN: LN Series Jaw-Flex Coupling
- 24: Size
- U: Spider material U : Polyurethane
- 98A1: Spider type
  - 98A1: 98A hardness
  - 64D1: 64D hardness
- A: Hub material A: Aluminum
- 15: Bore diameter
- C: Shaft coupling method C: Clamp P: Taper-Lock
- A: Hub material A: Aluminum
- 20: Bore diameter
- C: Shaft coupling method C: Clamp P: Taper-Lock

Transmission Capacity

Model No.	Spider		Spider performance torque		Torsional stiffness	Allowable misalignment			Clamp type			Taper-Lock type		
	Hardness	Color	Normal use N·m	Maximum N·m	N·m/rod	Angular misalignment deg	Parallel misalignment mm	End play mm	Maximum rotation speed r/min	Weight kg	Moment of inertia kg·m²	Maximum rotation speed r/min	Weight kg	Moment of inertia kg·m²
LN24	98A	Red	60	120	2200	0.9	0.10	−0.5 to +1.4	7000	0.35	1.70×10^{-4}	17000	0.35	1.75×10^{-4}
	64D	Green	75	150	5400	0.8	0.07							
LN28	98A	Red	160	320	4000	0.9	0.11	−0.7 to +1.5	5900	0.52	3.72×10^{-4}	15000	0.53	3.77×10^{-4}
	64D	Green	200	400	8800	0.8	0.08							
LN38	98A	Red	325	650	6600	0.9	0.12	−0.7 to +1.8	4800	1.02	10.4×10^{-4}	12000	1.00	10.4×10^{-4}
	64D	Green	405	810	14600	0.8	0.09							

Notes 1. Weight and moment of inertia values apply to maximum bore diameters.
2. The allowable misalignment values shown are the values applicable when the other two misalignment values are each 0.
3. Spiders are consumable parts, so must be replaced periodically to maintain backlash-free operation.

Dimensions

Clamp type

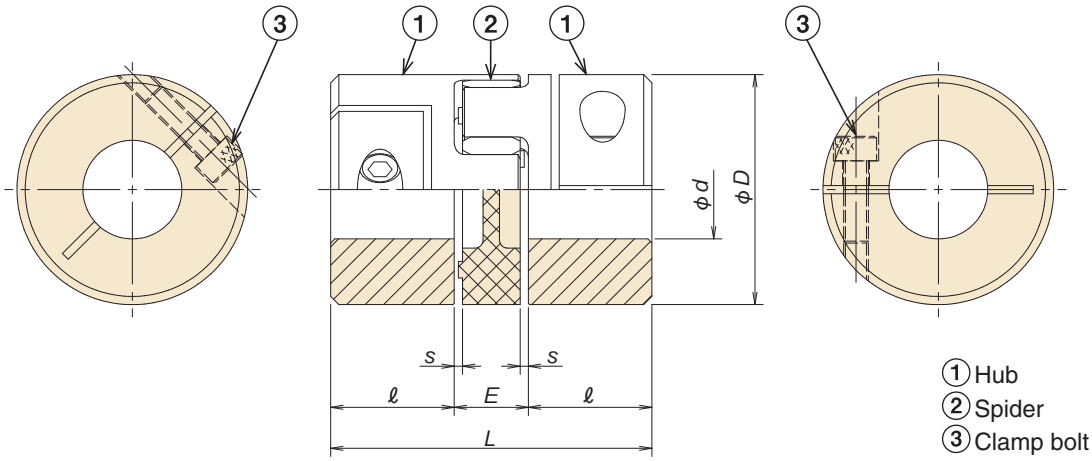

Unit: [mm]

Model No.	Minimum bore diameter	Maximum bore diameter	Outer diameter φD	Overall length L	Hub length ℓ	E	s
LN24	12	28	56	78	30	18	2
LN28	20	35	66	90	35	20	2.5
LN38	25	42	80	114	45	24	3

Clamp bolt tightening torques and shaft coupling torques

Unit: [mm]

Model No.	Bolt size	Tighteningtorque N·m	Bore diameter φ d	12	15	16	18	19	20	22	24	25	28	30	32	35	38	42
LN24	M6	10.5	Shaft coupling torque N·m	30	38	39	40	41	44	50	54	55	60					
LN28	M8	25							87	97	105	109	118	124	128	134		
LN38	M8	25										107	122	131	135	146	154	164

Recommended shaft tolerance = h7
(However, the recommended shaft tolerance for 35 mm diameters is h7 or (0 to +0.010).)

Taper-Lock type

Note: Taper-Lock models are made-to-order products. Production lots generally include 100 pieces. Inquire for information.

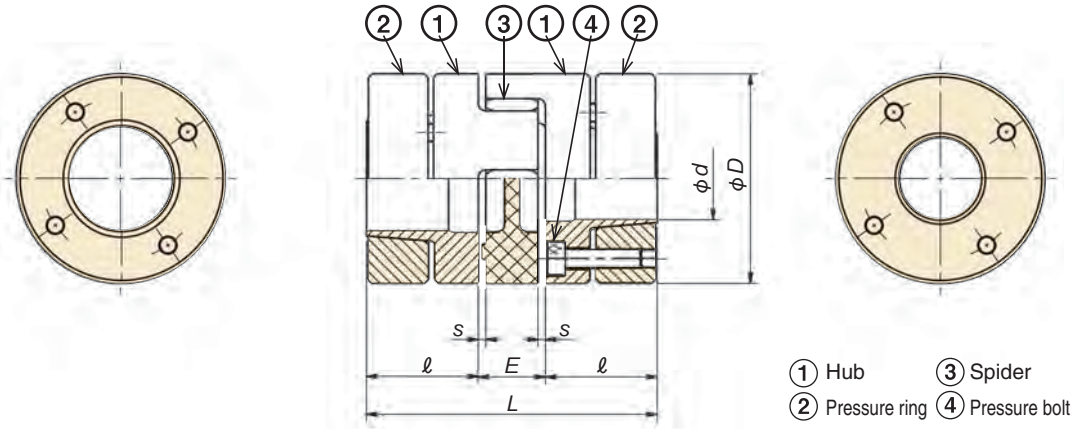

Unit: [mm]

Model No.	Minimum bore diameter	Maximum bore diameter	Outer diameter φD	Overall length L	Hub length ℓ	E	s
LN24	16	30	56	78	30	18	2
LN28	16	38	66	90	35	20	2.5
LN38	24	45	80	114	45	24	3

Pressure bolt tightening torques and shaft coupling torques

Unit: [mm]

Model No.	Bolt size	Number of bolts	Tighteningtorque N·m	Bore diameter φ d	16	19	20	22	24	25	28	30	32	35	38	40	42	45
LN24	M5	4	6	Shaft coupling torque N·m	84	107	117	139	129	139	181	192						
LN28	M5	4	6		128	164	182	219	207	223	247	296	300	356	415			
LN38	M5	4	10						315	340	396	472	492	578	668	622	677	762

Recommended shaft tolerance = h6
(However, the recommended shaft tolerance for 35 mm diameters is h6 or (0 to +0.010).)
Shafts with k6 tolerance can also be supported. Inquire for information.

Product Selection

To ensure that LN Series Jaw-Flex Couplings provide backlash-free operation over a long period, selected products must have a sufficient margin of safety for the spider's normal-use torque. Accordingly, use the procedure below to select products.
Spiders are consumable parts, so must be replaced periodically to maintain backlash-free operation.

1. Apply the drive's transmitted power P [kW] and the coupling's operating rotation speed n [r/min] to the formula below to calculate the torque T [N·m] that will be applied to the coupling.

$$T=9550 \cdot P/n$$

2. Use the operation conditions to determine the service factors St and Sd, and calculate the correction torque Tr [N·m] that will be applied to the coupling.

$$Tr=T \cdot St \cdot Sd$$

T : Temperature coefficient
P : Torsional stiffness factor

Select a product size that will result in the coupling's normal-use torque *Tn* being greater than or equal to the correction torque *Tr*.

$$Tn \geq Tr$$

3. Check that the maximum torque *Ts* [N·m] generated from the drive, load, or both the drive and load will be less than or equal to the coupling's normal-use torque *Tn*.

Maximum torque from drive: $Ts=Tas \cdot Ma \cdot Sa$
Maximum torque from load: $Ts=T\ell s \cdot M\ell \cdot S\ell$
$Tn \geq Ts \cdot St \cdot Sd$

Tas : Maximum drive torque [N·m]
Tℓs : Maximum load torque [N·m]
Ma : Drive's moment of inertia ratio
Mℓ : Load's moment of inertia ratio

$Ma = J\ell/(Ja+J\ell)$
$M\ell = Ja/(Ja+J\ell)$

Sa : Shock load factor (drive)
Sℓ : Shock load factor (load)
Ja : Drive's moment of inertia
Jℓ : Load's moment of inertia

4. Check that the mounted shaft is within the coupling's range of mountable shaft diameters. The shaft coupling torque varies according to the shaft diameter, so may be lower than the spider's normal-use torque in some cases.
Check that the shaft coupling torque for the selected coupling size is greater than or equal to the maximum torque Ts applied to the coupling.

Temperature coefficient

Operating temperature ℃	Temperature coefficient St
−30 to +30	1.0
−30 to +40	1.2
−30 to +60	1.4
−30 to +80	1.8

Torsional stiffness factor

Application	Torsional stiffness factor Sd
Machine tool spindle	2~5
Positioning	3~8
Encoder	10 or more

Shock load factor

Load type	Shock load factor Sa (Sℓ)
Uniform load	1.0
Low fluctuation	1.4
High fluctuation	1.8

Handling

Centering

The more accurate the initial centering of the coupling, the less eccentric rotational stress it will experience during operation.
Changes during operation caused by factors such as bearing wear, mounting surface subsidence, temperature-induced state changes, and vibrations can reduce the life of the coupling or your equipment. Center the coupling periodically.
The coupling's allowable angular misalignment and parallel misalignment are correlated to each other. Increasing one factor decreases the other, so the factors need to be considered together.

Allowable misalignment

Model No.	Spider hardness	Allowable misalignment		
		Angular misalignment deg	Parallel misalignment mm	End play (shaft direction displacement) mm
LN24	98A	0.9	0.10	−0.5 to +1.4
	64D	0.8	0.07	
LN28	98A	0.9	0.11	−0.7 to +1.5
	64D	0.8	0.08	
LN38	98A	0.9	0.12	−0.7 to +1.8
	64D	0.8	0.09	

Each angular misalignment value shown is the value applicable when the corresponding parallel misalignment value is 0, and vice-versa.

Relationship between angular misalignment and parallel misalignment

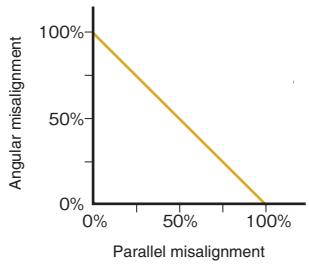

Operating environment

Use the couplings in a well ventilated location with an ambient temperature of –30 to 80°C, and low humidity and dust.
Avoid use in locations having corrosive liquids or gases, or locations of possible fires or explosions.
Avoid outdoor use since the couplings are not water- or corrosion-resistant.

Inspection

Re-check the angular misalignment and parallel misalignment one or two hours after starting actual operation.
Also check for problem parts and spider wear periodically (such as every six months to one year).
Spiders are wear parts. Replace them periodically.

L Series Jaw-Flex Couplings

The standardized machined bore in the hubs of Tsubaki's L Series of Jaw-Flex Couplings eliminate the need for labor-intensive hole machining, and enable use with common shaft diameters.
L Series models are the simplest type of flexible coupling, consisting of two hubs and one insert. They provide reliable torque transmission, good vibration/shock absorption ability and all the features couplings need in a design that is very easy to attach and remove. Three types of inserts are available for different operating temperature ranges and environmental resistance properties. The series has been designed primarily for ease of use, with an extensive lineup of models supporting general-purpose motors with outputs of up to 110 kW.

Insert

M type (blue)

S type (black)

H type (white)

Features

Machined-bore hub models
L Series models can be used with a wide range of bore combinations.
The motor shaft tolerances are j6 and k6, so the motor shaft fit is clearance fit, with G7 tolerance and special tolerance.
Both the new JIS key and old JIS key are kept as optional items.

Ideal for direct motor coupling
The design is suited for high-speed, low-torque operation, supporting general-purpose motors of various sizes. Four-pole motors of up to 45 kW and 2-pole motors of up to 110 kW are supported.

Insert selection
Three standardized insert types are available for every coupling size—the S type, M type and H type. (Only S type inserts are available for model L035, and only S type and H type inserts for model L050.) Different insert types can be selected for different applications. See page 88 for the characteristics of each type.

Compact/lightweight
L Series models are designed to be compact and lightweight. Models selected for direct motor coupling use can have an outer diameter about 50% smaller than the equivalent JIS flange-type flexible shaft couplings, and weigh about 50 to 90% less.

Simple structure
Since L Series models are composed of only three parts, failures are rare and part replacement is simple.

Outstanding environmental resistance
Inserts with properties such as oil resistance and chemical resistance can be selected.

Wide operating temperature range
L Series inserts can be used at lower and higher temperatures than previous Tsubaki rubber couplings, with the H type having an operating temperature range of between –50 and +120°C.

Large allowable misalignment
The allowable parallel misalignment is about twice as large as for JIS flange-type flexible shaft couplings, and the allowable angular misalignment about 6 times as large.

Easy handling
Since the simple structure connects the hub claws to the insert, the coupling can be connected or decoupled just by moving it in the direction of the shaft.

Low cost
A thoroughly economical design makes the L Series the lowest-cost coupling type for direct motor coupling.

Plated type
The hubs match the urethane or Hytrel® insert, and are highly corrosion-resistant.

Plated type

- ○ Nickel-plated ferrous sintered alloy (Models L190 and L225 are cast iron.)
- ○ The hubs match the urethane or Hytrel® insert, and are highly corrosion-resistant.
- ○ An attractive, highly corrosion-resistant type ideal for applications such as food processing machinery and fiber machinery.
- ○ All models are stocked with pilot bores.
- ○ The transmission capacity and dimensions are the same as for models with pilot bores.

Aluminum hub type

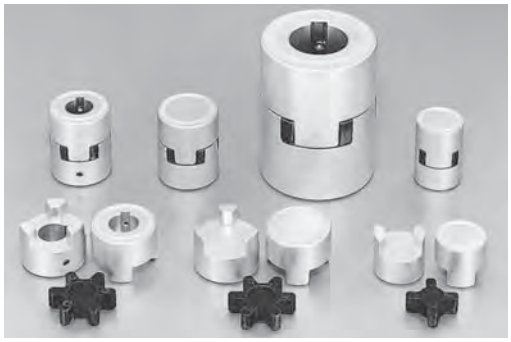

Features 1. Lightweight/compact 2. Attractive appearance
3. Machined-bore hub models kept as standard stock
4. Ideal for direct motor coupling 5. Easy handling

Hytrel® is a registered trademark of DuPont.

Structure

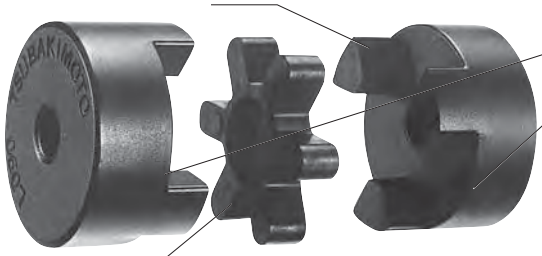

Claw

Hubs
Ferrous sintered alloy
(Models L190 and L225 are cast iron.)

Insert
S type (nitrile)
M type (urethane)
H type (Hytrel®)

Hytrel® is a registered trademark of DuPont.

Model Number

Sintered hub type

Machined bore models

L 070 - S - 15 J × 19 J N

- L: Series
- 070: Size
- S: Insert type
- 15: Bore diameter (pilot bore: RB)
- J: Keyway existence/type
- 19: Bore diameter (pilot bore: RB)
- J: Keyway existence/type
- N: Bore tolerance

Bore tolerance: No code: H7
N: Tolerance for motor shaft (see pages 89 and 90)

Keyway existence/type: J: New JIS key, normal type
E: Old JIS key, Type 2
(Models with bore diameters of between 5 and 11 mm have no keyway.)

Insert type: S: Nitrile
M: Urethane
H: Hytrel®

Pilot bore models

L 090 - M

- L: Series
- 090: Size
- M: Insert type

Plated type

L 090 F - M

- L: Series
- 090: Size
- F: Indicates a plated type.
- M: Insert type

Aluminum hub type

Machined bore models

L 070 A - S - 11 × 20 J

- L: Series
- 070: Size
- A: Aluminum hubs
- S: S type insert (nitrile)
- 11: Bore diameter (pilot bore on one side: RB)
- 20: Bore diameter (pilot bore on one side: RB)
- J: Keyway existence/type

Keyway existence/type: J: New JIS key, normal type
No code: Models with bore diameters of between 10 and 11 mm have no keyway.

Pilot bore models

L 090 A - S

- L: Series
- 090: Size
- S: S type insert (nitrile)

Note: M type (urethane) and H type (Hytrel®) inserts can also be used, but there is no change in allowable torque.

Hub

L 075 A - HUB - 019 JN

- 075: Size
- A: Hub material (A: Aluminum; No code is used for sintered hubs.)
- HUB: Indicates a hub alone.
- 019: Bore diameter
- JN: Keyway type

Insert

L 075 G S

- 075: Size
- G: Indicates an insert alone.
- S: Insert type (S: Nitrile; M: Urethane; H: Hytrel®)

Hytrel® is a registered trademark of DuPont.

Transmission Capacity/Dimensions

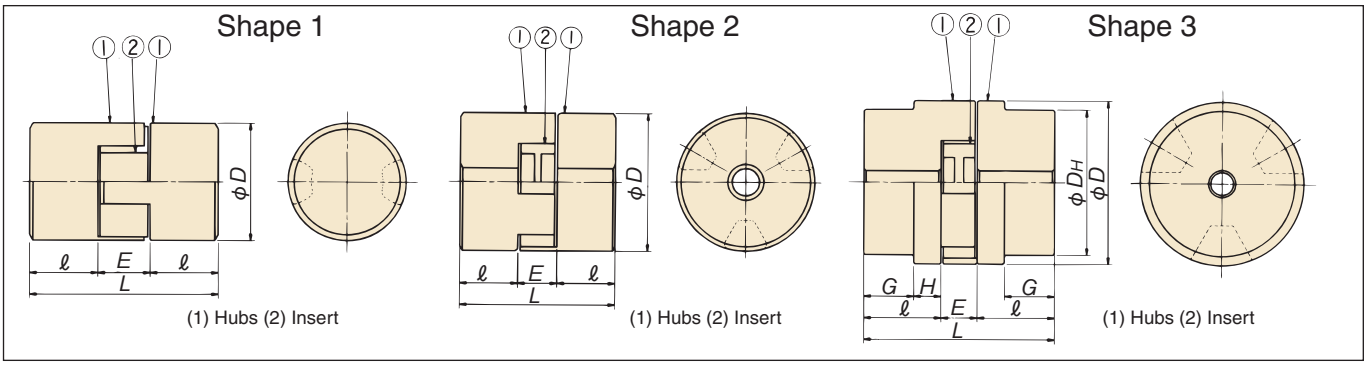

Sintered hub type

Unit: [mm]

Model No.	Allowable torque N·m{kgf·m}	Maximum rotation speed r/min	Shape	Pilot bore	Standard-stock bore diameter	Maximum bore diameter	L	ℓ	E	G	H	φ D	φ D_H	Weight kg	Moment of inertia kg·cm²
L035-S	0.4 { 0.04}	31000	1	–	**5, 6, 8**	9.5	20.8	6.7	7.4	–	–	15.9	–	0.015	0.006
L050-S	2.9 { 0.3 }	18000	1	–	**8,10,11,12 14,15,16**	16.0	44.5	15.9	12.7	–	–	27.4	–	0.10	0.12
L050-H	5.9 { 0.6 }														
L070-S	4.9 { 0.5 }	14000	1	6.4	**11,12,14 15,16,18 19,20**	20.0	51.2	19.0	13.2	–	–	34.5	–	0.20	0.40
L070-M	7.8 { 0.8 }					19.0									
L070-H	12.7 { 1.3 }														
L075-S	11.8 { 1.2 }	11000	2	8.0	**11,12,14,15 16,18,19,20 22,24,25**	26.0	54.4	20.6	13.2	–	–	44.5	–	0.36	1.14
L075-M	14.7 { 1.5 }														
L075-H	25.5 { 2.6 }														
L090-S	16.7 { 1.7 }	9000	2	11.1	**14,16,18 19,20,22 24,25,28**	29.0	54.4	20.6	13.2	–	–	53.6	–	0.54	2.45
L090-M	24.5 { 2.5 }														
L090-H	44.1 { 4.5 }														
L095-S	23.5 { 2.4 }	9000	2	11.1	–	29.0	64.0	25.4	13.2	–	–	53.6	–	0.64	2.95
L095-M	32.3 { 3.3 }														
L095-H	63.7 { 6.5 }														
L099-S	35.3 { 3.6 }	7000	2	12.7	**19,20,22 24,25,28 30,32,35**	35.0	72.8	27.0	18.8	–	–	64.3	–	1.1	6.95
L099-M	53.9 { 5.5 }														
L099-H	89.2 { 9.1 }														
L100-S	49.0 { 5.0 }	7000	2	15.0	–	37.0	88.8	34.9	19.0	–	–	64.3	–	1.2	8.35
L100-M	70.6 { 7.2 }					35.0									
L100-H	128 {13.1 }														
L110-S	110 {11.2 }	5000	2	18.0	**30,32,35 38,42,45 48**	48.0	108.4	42.9	22.6	–	–	84.1	–	2.8	31
L110-M	133 {13.6 }					47.0									
L110-H	256 {26.1 }														
L150-S	157 {16.0 }	5000	2	22.0	–	49.0	114.6	44.4	25.8	–	–	95.2	–	3.7	53
L150-M	214 {21.8 }														
L150-H	363 {37.0 }														
L190-S	192 {19.6 }	5000	3	19.1	–	58.0	134.1	54.0	26.1	34.9	19.1	114.3	101.6	5.8	108
L190-M	288 {29.4 }														
L190-H	529 {54.0 }														
L225-S	264 {26.9 }	4200	3	19.1	–	69.0	153.1	63.5	26.1	34.9	28.6	127.0	107.9	8.0	182
L225-M	395 {40.3 }					63.0									
L225-H	711 {72.6 }														

Notes 1. All sizes are pilot bores. See page 89 for the optional bore diameters.
2. The maximum rotation speed is determined by the coupling's transmission capacity. Balance adjustment has not been performed.
3. Weight and moment of inertia values apply to maximum bore diameters.
4. The L090 and L095 inserts are the same.
5. The L099 and L100 inserts are the same.

Aluminum hub type

Unit: [mm]

Model No.	Allowable torque N·m{kgf·m}	Maximum rotation speed r/min	Body shape	Standard-stock bore diameters	Maximum bore diameter	L	ℓ	E	φ D	Weight kg	Moment of inertia kg·cm²
L050A-S	2.9 { 0.3}	18000	1	**10,11,12,14,15,16**	16.0	43.2	15.25	12.7	27.4	0.04	0.043
L070A-S	4.9 { 0.5}	14000	1	**10,11,12,14,15 16,18,19,20**	20.0	49.2	18.0	13.2	34.5	0.07	0.14
L075A-S	11.8 { 1.2}	11000	2	**14,15,16,18,19 20,22,24,25**	26.0	54.4	20.6	13.2	44.5	0.13	0.41
L090A-S	16.7 { 1.7}	9000	2	**18,19,20,22,24,25,28**	29.0	55.0	20.9	13.2	53.6	0.19	0.87
L095A-S	23.5 { 2.4}	9000	2	**18,19,20,22,24,25,28**	29.0	61.0	23.9	13.2	53.6	0.23	1.05
L100A-S	49.0 { 5.0}	7000	2	**22,24,25,28,30,32,35**	37.0	88.0	34.5	19.0	64.3	0.43	2.97
L110A-S	110 {11.2}	5000	2	**38,42**	48.0	110.0	43.7	22.6	84.1	1.00	11.0

Note: Both hubs have pilot (undrilled) bores.

Insert shape/dimensions

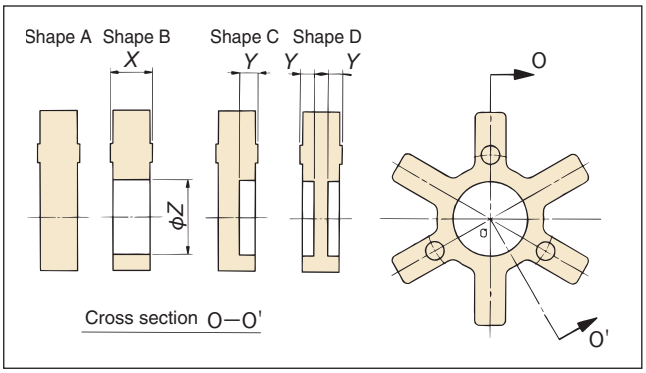

The E dimension in the table of dimensions on the previous page applies to the mounted state, so is different from the X dimension.
M type and H type inserts of shape B have a hole through which a shaft can be passed.

Dimensions

Unit: [mm]

Model No.	Shape	X	Y	Z
L035-S	A	7.14		
L050-S	A	12.2		
L050-H	B	12.2		7.94
L070-S	A	12.7		
L070-M	B	12.7		12.7
L070-H	B	12.7		12.7
L075-S	C	12.7	2.35	19.05
L075-M	B	12.7		19.05
L075-H	B	12.7		19.05
L090-S	C	12.7	7.11	22.23
L090-M	B	12.7		22.23
L090-H	B	12.7		22.23
L095-S	C	12.7	7.11	22.23
L095-M	B	12.7		22.23
L095-H	B	12.7		22.23
L099-S	D	18.29	7.62	26.19
L099-M	B	18.29		26.19
L099-H	B	18.29		26.19
L100-S	D	18.29	7.62	26.19
L100-M	B	18.29		26.19
L100-H	B	18.29		26.19
L110-S	D	21.95	7.8	30.16
L110-M	B	21.95		30.16
L110-H	B	21.95		30.16
L150-S	D	25.14	9.46	31.75
L150-M	D	25.14	8.51	31.75
L150-H	D	25.14	8.51	31.75
L190-S	D	25.14	9.46	34.93
L190-M	D	25.14	8.51	34.93
L190-H	D	25.14	8.51	34.93
L225-S	C	25.14	11.05	44.45
L225-M	D	25.14	8.51	44.45
L225-H	D	25.14	8.51	44.45

Characteristics of insert types

Every Tsubaki Jaw-Flex Coupling size is available as an S type, M type or H type, corresponding to the insert type. (Only the S type of model L035 is available, and only the S and H types of model L050.) The characteristics of each type are described below. Select the type best suited to your application.

S type: Has inserts made of nitrile rubber. A highly flexible and shock-resistant type, suitable for the most general-purpose applications.

M type: Has inserts made of urethane. Provides about 50% higher transmitted torque than the S type. Is also highly chemical-resistant.

H type: Has inserts made of Hytrel®. Provides about 2 to 3 times higher transmitted torque than the S type. Offers outstanding resistance to oil, chemicals, cold and heat.
(Contact Tsubaki when couplings will be used in a chemical atmosphere.)

Characteristics of each type

Type / Characteristic	S type	M type	H type
Insert material	Nitrile	Urethane	Hytrel®
Color	Black	Blue	White
Torque ratio	1	1.5	2 to 3
Flexibility	◎	◎	○
Shock resistance	◎	○	○
Oil resistance	○	○	◎
Chemical resistance	—	○	◎
Operating temperature range	–40 to 100°C	–34 to 70°C	–50 to 120°C
Allowable angular misalignment	1°	1°	0.5°
Allowable parallel misalignment	0.38 mm	0.38 mm	0.38 mm

Hytrel® is a registered trademark of DuPont.

Sintered hub type

Dimensions of hubs with standard machined bore

Unit: [mm]

Bore diameter name	Model No.							φ d		W			T	
	L035	L050	L070	L075	L090	L099	L110	Bore diameter	Tolerance		Reference dimension	Tolerance	Reference dimension	Tolerance
5	●							5	H7 $^{+0.012}_{0}$	No keyway				
6	●	○						6	H7 $^{+0.012}_{0}$					
8	●	●	○					8	H7 $^{+0.015}_{0}$					
10		●	○					10	H7 $^{+0.015}_{0}$					
11		●	●	●				11	H7 $^{+0.018}_{0}$					
12J		●	●	●				12	H7 $^{+0.018}_{0}$	New	4	± 0.015	13.8	$^{+0.1}_{0}$
12E		●	●	○						Old	4	$^{+0.050}_{+0.020}$	13.5	$^{+0.2}_{0}$
14JN		●	●	●	●			14	G7 $^{+0.024}_{+0.006}$	New	5	± 0.015	16.3	$^{+0.1}_{0}$
14EN		●	●	●	○					Old	5	$^{+0.050}_{+0.020}$	16	$^{+0.2}_{0}$
15J		●	●	●	○	○		15	H7 $^{+0.018}_{0}$	New	5	± 0.015	17.3	$^{+0.1}_{0}$
15E		●	●	●	○	○				Old	5	$^{+0.050}_{+0.020}$	17	$^{+0.2}_{0}$
16J		●	●	●	●	○		16	H7 $^{+0.018}_{0}$	New	5	± 0.015	18.3	$^{+0.1}_{0}$
16E			●	●	○	○				Old	5	$^{+0.050}_{+0.020}$	18	$^{+0.2}_{0}$
18J			●	●	●	○		18	H7 $^{+0.018}_{0}$	New	6	± 0.015	20.8	$^{+0.1}_{0}$
18E			●	●	○	○				Old	5	$^{+0.050}_{+0.020}$	20	$^{+0.2}_{0}$
19JN			●	●	●	●		19	G7 $^{+0.028}_{+0.007}$	New	6	± 0.015	21.8	$^{+0.1}_{0}$
19EN			●	●	●	○				Old	5	$^{+0.050}_{+0.020}$	21	$^{+0.2}_{0}$
20J			●	●	●	●	○	20	H7 $^{+0.021}_{0}$	New	6	± 0.015	22.8	$^{+0.1}_{0}$
20E			●	●	●	○	○			Old	5	$^{+0.050}_{+0.020}$	22	$^{+0.2}_{0}$
22J				●	●	●	○	22	H7 $^{+0.021}_{0}$	New	6	± 0.015	24.8	$^{+0.1}_{0}$
22E				●	●	○	○			Old	7	$^{+0.061}_{+0.025}$	25	$^{+0.2}_{0}$
24JN				●	●	●	○	24	G7 $^{+0.028}_{+0.007}$	New	8	± 0.018	27.3	$^{+0.2}_{0}$
24EN				●	●	●	○			Old	7	$^{+0.061}_{+0.025}$	27	$^{+0.2}_{0}$
25J				●	●	●	○	25	H7 $^{+0.021}_{0}$	New	8	± 0.018	28.3	$^{+0.2}_{0}$
25E				●	●	●	○			Old	7	$^{+0.061}_{+0.025}$	28	$^{+0.2}_{0}$
28JN					●	●	○	28	G7 $^{+0.028}_{+0.007}$	New	8	± 0.018	31.3	$^{+0.2}_{0}$
28EN					●	●	○			Old	7	$^{+0.061}_{+0.025}$	31	$^{+0.2}_{0}$
30J						●	●	30	H7 $^{+0.021}_{0}$	New	8	± 0.018	33.3	$^{+0.2}_{0}$
30E						●	○			Old	7	$^{+0.061}_{+0.025}$	33	$^{+0.2}_{0}$
32J						●	●	32	H7 $^{+0.025}_{0}$	New	10	± 0.018	35.3	$^{+0.2}_{0}$
32E						●	○			Old	10	$^{+0.061}_{+0.025}$	35.5	$^{+0.2}_{0}$
35J						●	●	35	H7 $^{+0.025}_{0}$	New	10	± 0.018	38.3	$^{+0.2}_{0}$
35E						●	○			Old	10	$^{+0.061}_{+0.025}$	38.5	$^{+0.2}_{0}$
38JN							●	38	$^{+0.040}_{+0.015}$	New	10	± 0.018	41.3	$^{+0.2}_{0}$
38EN							●			Old	10	$^{+0.061}_{+0.025}$	41.5	$^{+0.2}_{0}$
42JN							●	42	$^{+0.040}_{+0.015}$	New	12	± 0.021	45.3	$^{+0.2}_{0}$
42EN							●			Old	12	$^{+0.075}_{+0.032}$	45.5	$^{+0.2}_{0}$
45J							●	45	H7 $^{+0.025}_{0}$	New	14	± 0.021	48.8	$^{+0.2}_{0}$
45E							●			Old	12	$^{+0.075}_{+0.032}$	48.5	$^{+0.2}_{0}$
48JN							●	48	$^{+0.040}_{+0.015}$	New	14	± 0.021	51.8	$^{+0.2}_{0}$
48EN							●			Old	12	$^{+0.075}_{+0.032}$	51.5	$^{+0.2}_{0}$

Notes 1. Black circles indicate standard models. White circles indicate option models. Nonstandard bore diameters and models L150, L190 and L225 with machined bores are made-to-order lot products.
2. In bore diameter, J indicates the new JIS key, normal type (JIS B 1301-1996); E indicates the old JIS key, Type 2 (JIS B 1301-1959); JN indicates a bore tolerance corresponding to the motor shaft.
(See the dimensions in the table for the tolerances.)
3. The bore diameter name is displayed on the hub surface.

Sintered hub type

Machined-bore hub dimension drawing

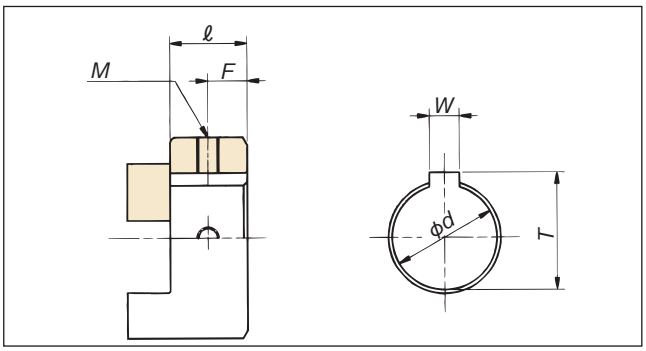

Dimensions

Unit: [mm]

Model No.	ℓ	F	M Set screws
L035	6.7	3.0	M3 × 4
L050	15.9	8.0	M4 × 6
L070	19.0	9.5	M5 × 5
L075	20.6	10.5	M5 × 5
L090	20.6	10.5	M6 × 8
L099	27.0	13.5	M6 × 8
L110	42.9	20.5	M8 × 12

Reference: Induction motor shaft diameter and tolerance

Unit: [mm]

Motor Capacity	0.2kW	0.4kW	0.75kW	1.5kW	2.2kW	3.7kW	5.5kW	7.5kW	11kW	15kW	22kW
Shaft diameter	ϕ 11 h6 $^{0}_{-0.018}$	ϕ 14 j6 $^{+0.008}_{-0.003}$	ϕ 19 j6 $^{+0.009}_{-0.004}$	ϕ 24 j6 $^{+0.009}_{-0.004}$	ϕ 28 j6 $^{+0.009}_{-0.004}$	ϕ 28 j6 $^{+0.009}_{-0.004}$	ϕ 38 k6 $^{+0.018}_{-0.002}$	ϕ 38 k6 $^{+0.018}_{+0.002}$	ϕ 42 k6 $^{+0.018}_{+0.002}$	ϕ 42 k6 $^{+0.018}_{+0.002}$	ϕ 48 k6 $^{+0.018}_{+0.002}$

Aluminum hub type

Hubs with standard machined bore

Dimensions

Unit: [mm]

Bore diameter name	Model No.							ϕ d		Keyway width W		Keyway depth T	
	L050A	L070A	L075A	L090A	L095A	L100A	L110A	Bore diameter	Tolerance	Reference dimension	Tolerance	Reference dimension	Tolerance
10								10	H7	No keyway			
11								11	H7				
12J								12	H7	4	± 0.015	13.8	$^{+0.1}_{0}$
14JN								14	G7	5	± 0.015	16.3	$^{+0.1}_{0}$
15J								15	H7	5	± 0.015	17.3	$^{+0.1}_{0}$
16J								16	H7	5	± 0.015	18.3	$^{+0.1}_{0}$
18J								18	H7	6	± 0.015	20.8	$^{+0.1}_{0}$
19JN								19	G7	6	± 0.015	21.8	$^{+0.1}_{0}$
20J								20	H7	6	± 0.015	22.8	$^{+0.1}_{0}$
22J								22	H7	6	± 0.015	24.8	$^{+0.1}_{0}$
24JN								24	G7	8	± 0.018	27.3	$^{+0.2}_{0}$
25J								25	H7	8	± 0.018	28.3	$^{+0.2}_{0}$
28JN								28	G7	8	± 0.018	31.3	$^{+0.2}_{0}$
30J								30	H7	8	± 0.018	33.3	$^{+0.2}_{0}$
32J								32	H7	10	± 0.018	35.3	$^{+0.2}_{0}$
35J								35	H7	10	± 0.018	38.3	$^{+0.2}_{0}$
38JN								38	$^{+0.040}_{+0.015}$	10	± 0.018	41.3	$^{+0.2}_{0}$
42JN								42	$^{+0.040}_{+0.015}$	12	± 0.021	45.3	$^{+0.2}_{0}$

Notes 1. Shaded cells indicate standard models.
2. In bore diameter names, J indicates the new JIS key, normal type (JIS B 1301-1996), and JN indicates a bore tolerance corresponding to the motor shaft. (See the dimensions in the table for the tolerances.)
3. The bore diameter name is displayed on the hub surface.

Machined-bore hub dimension drawing

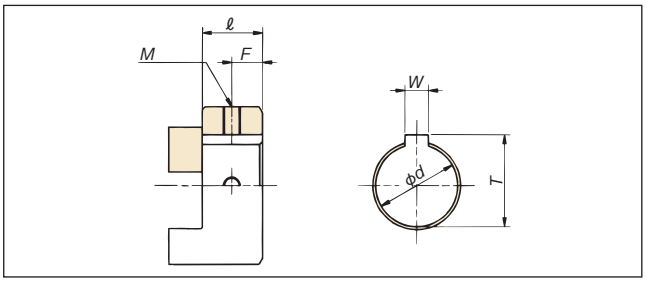

Dimensions/set screw tightening torques

Unit: [mm]

Model No.	ℓ	F	M Set screws	Tighteningtorque N·m{kgf·m}
L050A	15.25	8.0	M4 × 6	1.86 {0.19}
L070A	18.0	9.5	M5 × 5	3.63 {0.37}
L075A	20.6	10.5	M5 × 5	3.63 {0.37}
L090A	20.9	10.5	M6 × 8	6.67 {0.68}
L095A	23.9	10.5	M6 × 8	6.67 {0.68}
L100A	34.5	17.0	M6 × 8	6.67 {0.68}
L110A	43.7	20.5	M8 × 12	16.2 {1.65}

Product Selection

(1) When selecting products, use Table 1 to determine the service factor corresponding to the motor type and operating conditions.
(2) Calculate the correction torque (T') by multiplying the load torque (T) by the service factor (SF) in Table 1. Select a model having an allowable torque greater than or equal to the correction torque.
(3) Check that the required bore diameter is less than or equal to the maximum bore diameter of the selected model. If the required bore diameter is more than the selected model's maximum bore diameter, select a different model satisfying the required bore diameter.
(4) When using direct motor coupling, refer to the selection tables, Table 2 and Table 3.

Torque calculation method

$$T = \frac{60000 \times P}{2\pi \times n} \left\{ T = \frac{974 \times P}{n} \right\}$$

T = Load torque [N·m] {kgf·m}
P = Transmitted power [kW]
n = Rotation speed [r/min]
T' = Correction torque [N·m] {kgf·m}

Table 1. Service factor (SF) table

Load type		Motor type		
		Motor turbine	Gasoline engine/ diesel engine (6 cylinders or more)	Gasoline engine/ diesel engine (less than 6 cylinders)
● No load variation, uniform load ● No two-way operation	● Operation time= About 8 hours per day ● Low-torque startup	1.0	1.5	2.0
● Load variation of up to moderate degree ● Shock loads of up to moderate degree	● Operation time= About 8 hours per day ● No two-way operation (the SF used for typical drive)	1.5	2.0	2.5
● High shock loads ● Large load variation	● Operation time= About 8 hours per day ● Two-way operation ● High-torque startup	2.0	2.5	3.0

Note: For operation times of 16 to 24 hours per day, add 1 to the service factor.

Table 2. Selection table (for direct motor coupling, 50 Hz)

50Hz Motor rated output (50 Hz) kW	Two poles; 3,000 r/min					Four poles; 1,500 r/min					Six poles; 1,000 r/min				
	Motor shaft diameter mm	Motor rated torque N·m {kgf·m}	Service factor			Motor shaft diameter mm	Motor rated torque N·m {kgf·m}	Service factor			Motor shaft diameter mm	Motor rated torque N·m {kgf·m}	Service factor		
			1.0	1.5	2.0			1.0	1.5	2.0			1.0	1.5	2.0
			Coupling model No.					Coupling model No.					Coupling model No.		
0.1						11	0.6 { 0.06}	L050-S L050A-S	L050-S L050A-S	L050-S L050A-S					
0.2	11	0.6 { 0.06}	L050-S L050A-S	L050-S L050A-S	L050-S L050A-S	11	1.3 { 0.13}	L050-S L050A-S	L050-S L050A-S	L050-S L050A-S	14	1.9 { 0.19}	L050-S L050A-S	L050-S L050A-S	L070-S L070A-S
0.4	14	1.3 { 0.13}	L050-S L050A-S	L050-S L050A-S	L050-S L050A-S	14	2.5 { 0.26}	L050-S L050A-S	L050-H L070A-S	L050-H L075A-S	19	3.8 { 0.39}	L070-S L070A-S	L075-S L075A-S	L075-S L075A-S
0.75	19	2.4 { 0.24}	L070-S L070A-S	L070-S L070A-S	L070-S L070A-S	19	4.8 { 0.49}	L070-S L070A-S	L070-M L075A-S	L070-H L075A-S	24	7.2 { 0.73}	L075-S L075A-S	L075-S L075A-S	L075-M L090A-S
1.5	24	4.8 { 0.49}	L075-S L075A-S	L075-S L075A-S	L075-S L075A-S	24	9.5 { 0.97}	L075-S L075A-S	L075-M L090A-S	L075-H L095A-S	28	14.7 { 1.5 }	L090-S L090A-S	L090-M L095A-S	L090-H L100A-S
2.2	24	7.0 { 0.71}	L075-S L075A-S	L075-S L075A-S	L075-M L090A-S	28	14.0 { 1.43}	L090-S L090A-S	L090-M L095A-S	L090-H L100A-S	28	20.6 { 2.1 }	L095-S L095A-S	L099-S L100A-S	L099-M L100A-S
3.7	28	11.8 { 1.2 }	L090-S L090A-S	L090-M L095A-S	L090-M L095A-S	28	23.5 { 2.4 }	L095-S L095A-S	L090-H L100A-S	L090-H L100A-S	38	35.3 { 3.6 }	L110-S L110A-S	L110-S L110A-S	L110-S L110A-S
5.5	38	17.6 { 1.8 }	L110-S L110A-S	L110-S L110A-S	L110-S L110A-S	38	35.3 { 3.6 }	L110-S L110A-S	L110-S L110A-S	L110-S L110A-S	38	52.9 { 5.4 }	L110-S L110A-S	L110-S L110A-S	L110-S L110A-S
7.5	38	23.5 { 2.4 }	L110-S L110A-S	L110-S L110A-S	L110-S L110A-S	38	48.0 { 4.9 }	L110-S L110A-S	L110-S L110A-S	L110-S L110A-S	42	71.5 { 7.3 }	L110-S L110A-S	L110-S L110A-S	L110-H
11	42	35.3 { 3.6 }	L110-S L110A-S	L110-S L110A-S	L110-S L110A-S	42	69.6 { 7.1 }	L110-S L110A-S	L110-S L110A-S	L110-H	42	105 {10.7 }	L110-S L110A-S	L150-M	L150-M
15	42	48.0 { 4.9 }	L110-S L110A-S	L110-S L110A-S	L110-S L110A-S	42	95.1 { 9.7 }	L110-S L110A-S	L110-H	L110-H	48	143 {14.6 }	L190-S	L190-M	L190-M
18.5	42	58.8 { 6.0 }	L110-S L110A-S	L110-S L110A-S	L110-M	48	118 {12.0 }	L150-S	L150-S	L150-H	55	176 {18.0 }	L190-S	L190-M	L190-H
22	48	69.6 { 7.1 }	L110-S L110A-S	L110-S L110A-S	L150-S	48	140 {14.3 }	L150-S	L150-M	L150-H	55	210 {21.4 }	L225-S	L225-M	L225-H
30	55	95.1 { 9.7 }	L190-S	L190-S	L190-S	55	191 {19.5 }	L190-S	L190-M	L190-H	60	286 {29.2 }	L225-M	L225-H	L225-H
37	55	118 {12.0 }	L190-S	L190-S	L190-M	60	235 {24.0 }	L225-S	L225-M	L225-H					
45	55	143 {14.6 }	L190-S	L190-M	L190-M	60	286 {29.2 }	L225-H	L225-H	L225-H					
55	55	175 {17.9 }	L190-S	L190-M	L190-H										
75	55	239 {24.4 }	L190-M	L190-H	L190-H										
90	55	286 {29.2 }	L190-M	L190-H	L190-H										
110	55	350 {35.7 }	L190-H	L190-H	L225-H										
132	55	420 {42.9 }	L190-H	L225-H											

Notes 1. Check the motor characteristics before selecting a product.
2. Shaded cells indicate stock models with hubs having standard bore machining.

Table 3. Selection table (60 Hz)

60Hz Motor rated output (60 Hz) kW	Two poles; 3,600 r/min					Four poles; 1,800 r/min					Six poles; 1,200 r/min				
	Motor shaft diameter mm	Motor rated torque N·m {kgf·m}	Service factor			Motor shaft diameter mm	Motor rated torque N·m {kgf·m}	Service factor			Motor shaft diameter mm	Motor rated torque N·m {kgf·m}	Service factor		
			1.0	1.5	2.0			1.0	1.5	2.0			1.0	1.5	2.0
			Coupling model No.					Coupling model No.					Coupling model No.		
0.1						11	0.5 { 0.05}	L050-S L050A-S	L050-S L050A-S	L050-S L050A-S					
0.2	11	0.5 { 0.05}	L050-S L050A-S	L050-S L050A-S	L050-S L050A-S	11	1.0 { 0.1 }	L050-S L050A-S	L050-S L050A-S	L050-S L050A-S	14	1.6 { 0.16}	L050-S L050A-S	L050-S L050A-S	L050-H L070A-S
0.4	14	1.0 { 0.1 }	L050-S L050A-S	L050-S L050A-S	L050-S L050A-S	14	2.0 { 0.2 }	L050-S L050A-S	L050-S L050A-S	L050-H L070A-S	19	2.9 { 0.3 }	L070-S L070A-S	L070-S L070A-S	L075-S L075A-S
0.75	19	2.0 { 0.2 }	L070-S L070A-S	L070-S L070A-S	L070-S L070A-S	19	3.9 { 0.4 }	L070-S L070A-S	L070-M L075A-S	L070-H L075A-S	24	5.9 { 0.6 }	L075-S L075A-S	L075-S L075A-S	L075-S L075A-S
1.5	24	3.9 { 0.4 }	L075-S L075A-S	L075-S L075A-S	L075-S L075A-S	24	7.8 { 0.8 }	L075-S L075A-S	L075-S L075A-S	L075-H L090A-S	28	11.8 { 1.2 }	L090-S L090A-S	L090-M L095A-S	L090-M L095A-S
2.2	24	5.9 { 0.6 }	L075-S L075A-S	L075-S L075A-S	L075-S L075A-S	28	11.8 { 1.2 }	L090-S L090A-S	L090-M L095A-S	L090-M L095A-S	28	17.6 { 1.8 }	L090-M L095A-S	L090-H L100A-S	L090-H L100A-S
3.7	28	9.8 { 1.0 }	L090-S L090A-S	L090-S L090A-S	L090-M L095A-S	28	19.6 { 2.0 }	L090-M L095A-S	L090-H L100A-S	L090-H L100A-S	38	29.4 { 3.0 }	L110-S L110A-S	L110-S L110A-S	L110-S L110A-S
5.5	38	14.7 { 1.5 }	L110-S L110A-S	L110-S L110A-S	L110-S L110A-S	38	29.4 { 3.0 }	L110-S L110A-S	L110-S L110A-S	L110-S L110A-S	38	44.1 { 4.5 }	L110-S L110A-S	L110-S L110A-S	L110-S L110A-S
7.5	38	19.6 { 2.0 }	L110-S L110A-S	L110-S L110A-S	L110-S L110A-S	38	40.2 { 4.1 }	L110-S L110A-S	L110-S L110A-S	L110-S L110A-S	42	59.8 { 6.1 }	L110-S L110A-S	L110-S L110A-S	L110-M
11	42	29.4 { 3.0 }	L110-S L110A-S	L110-S L110A-S	L110-S L110A-S	42	58.8 { 6.0 }	L110-S L110A-S	L110-S L110A-S	L110-M	42	87.2 { 8.9 }	L110-S L110A-S	L110-M	L110-H
15	42	40.1 { 4.1 }	L110-S L110A-S	L110-S L110A-S	L110-S L110A-S	42	79.4 { 8.1 }	L110-S L110A-S	L110-M	L110-H	48	120 {12.2 }	L150-S	L150-M	L150-H
18.5	42	49.0 { 5.0 }	L110-S L110A-S	L110-S L110A-S	L110-S L110A-S	48	98.0 {10.0 }	L110-S L110A-S	L150-S	L150-M	55	147 {15.0 }	L190-S	L190-M	L190-H
22	48	58.8 { 6.0 }	L110-S L110A-S	L110-S L110A-S	L150-S	48	117 {11.9 }	L150-S	L150-M	L150-H	55	175 {17.9 }	L225-S	L225-S	L225-M
30	55	79.4 { 8.1 }	L190-S	L190-S	L190-S	55	159 {16.2 }	L190-S	L190-M	L190-H	60	239 {24.4 }	L225-S	L225-M	L225-H
37	55	98.0 {10.0 }	L190-S	L190-S	L190-S	60	196 {20.0 }	L225-S	L225-M	L225-M					
45	55	120 {12.2 }	L190-S	L190-S	L190-M	60	239 {24.4 }	L225-S	L225-M	L225-H					
55	55	146 {14.9 }	L190-S	L190-M	L190-H										
75	55	199 {20.3 }	L190-M	L190-H	L190-H										
90	55	239 {24.4 }	L190-M	L190-H	L190-H										
110	55	292 {29.8 }	L190-H	L190-H	L225-H										
132	55	350 {35.7 }	L190-H	L190-H	L225-H										

Notes 1. Check the motor characteristics before selecting a product.
2. Shaded cells indicate stock models with hubs having standard bore machining.

Pilot bore models

1. Bore machining, keyway machining

Follow the procedure below when machining bore or keyways in pilot bore models.

(1) Before machining, chuck the hub outer circumference and center the hub as shown in Figure 1. Sintered hub types and plated hub types are made of steam-treated ferrous sintered alloy, so use of a cutting tool made of ultrahard material (JIS symbols 9-20, K-01) is recommended. (Models L190 and L225 are cast iron.)

(2) Keyways should be machined at positions out of the way of claws. The tap sizes and positions shown in Table 4 are recommended.

(3) The recommended bore machining tolerances are clearance fit tolerances such as those shown in Table 5. Avoid tight fits and attachment methods generating internal tensile stress such as Power-Locks.

Figure 1. Bore machining

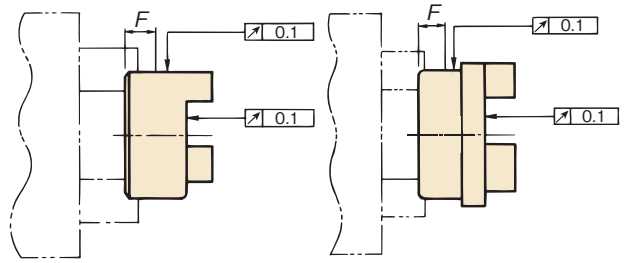

Table 5. Recommended fit tolerances

Fit		Fit		Fit	
Shaft tolerance	Hole tolerance	Shaft tolerance	Hole tolerance	Shaft tolerance	Hole tolerance
h6 h7	H7	j6 j7	G7	k6 k7	F7

Table 4. Recommended set screw positions (*F* dimension)

Size	Sintered hub type, plated hub type												Aluminum hub type						
	L035	L050	L070	L075	L090	L095	L099	L100	L110	L150	L190	L225	L050A	L070A	L075A	L090A	L095A	L100A	L110A
	L035F	L050F	L070F	L075F	L090F	L095F	L099F	L100F	L110F	L150F	L190F	L225F							
Tap size	M3	M4	M5	M5	M6	M6	M6	M6	M8	M8	M8	M8	M4	M5	M5	M6	M6	M6	M8
F (mm)	3.0	8.0	9.5	10.5	10.5	12.5	13.5	12.5	20.5	17.5	25.5	25.5	8.0	9.5	10.5	10.5	10.5	17.0	20.5

2. Mounting

(1) Fit the hubs and keys onto both shafts. Do not hammer in the hubs or keys. Keys should be well ground.
(2) Fasten the two set screws.
(3) Fit the insert into one of the hubs.
(4) Insert the insert so that the claw end surface of both hubs will be flush with the insert end surface (Figure 2).
(5) Correct the angular misalignment by setting the *S* dimension (given in Table 6) uniformly around the circumference as shown in Figure 3. See Table 6 for the allowable angular misalignment θ.
(6) Place a straight edge on the outer circumference of the hubs as shown in Figure 3, and adjust dimension ε to no more than the value shown in Table 6, at two points separated by about 90 degrees. Insert wear life is greatly affected by the centering alignment.

Figure 2

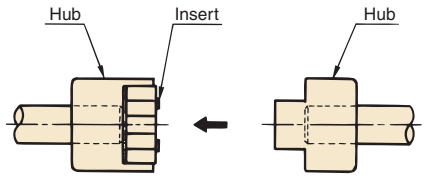

Figure 3. Centering

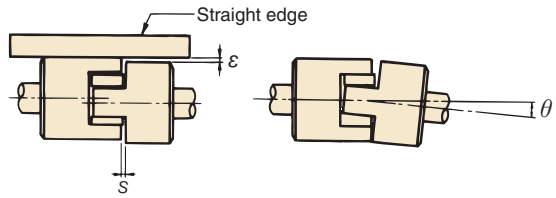

Table 6. Allowable misalignment

Size													
Sintered hubs		L035	L050	L070	L075	L090	L095	L099	L100	L110	L150	L190	L225
Plated hubs		L035F	L050F	L070F	L075F	L090F	L095F	L099F	L100F	L110F	L150F	L190F	L225F
Aluminum hubs			L050A	L070A	L075A	L090A	L095A		L100A	L110A			
Allowable parallel misalignment ε [mm]		0.38	0.38	0.38	0.38	0.38	0.38	0.38	0.38	0.38	0.38	0.38	0.38
Allowable angular misalignment (θ °)	S/M types	1	1	1	1	1	1	1	1	1	1	1	1
	H type	0.5	0.5	0.5	0.5	0.5	0.5	0.5	0.5	0.5	0.5	0.5	0.5
S (mm)	Standard dimension	0.6	1.9	1.7	1.7	1.7	1.7	1.7	1.9	2.3	2.0	2.3	2.3
	End play (shaft direction displacement)	± 0.3	± 0.5	± 0.5	± 0.5	± 0.5	± 0.5	± 0.5	± 0.7	± 0.7	± 0.7	± 1.0	± 1.0

Note: M type and H type with aluminum hub can be used, but have the same transmitted torque as the S type.

(7) When the rotation speed will exceed 2,000 r/min, reducing the ε and θ values shown in Table 6 by at least half is recommended.
(8) Another mounting method is to move the hubs along the shafts to make the claw and insert end surfaces flush in both hubs as shown in Figure 4. When using this method, perform centering by the same method of Steps (5) and (6). After centering, fasten the two set screws tightly, applying the tightening torque given in Table 7 below.
(9) To prevent the set screws becoming loose, use of a metal adhesive is recommended (recommended type: Loctite 262).

Figure 4

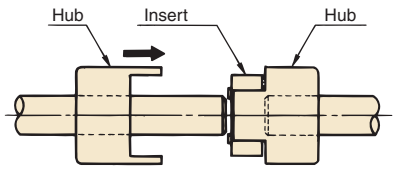

Table 7. List of set screw tightening

Set screw size	M3	M4	M5	M6	M8	M10	M12
Tighteningtorque N·m{kgf·m}	0.78 {0.08}	1.86 {0.19}	3.63 {0.37}	6.66 {0.68}	16.2 {1.65}	29.4 {3.0 }	54.9 {5.6 }

Hubs with machined bore

1. Items to check before mounting

(1) The hubs display the bore diameter and key type (J: New JIS key, normal type; E: Old JIS key, Type 2), so check the bore diameter and key type for the ordered size.
(2) Two set screws are provided.
(3) Hubs with bore diameters of 11 mm or less have no keyway, so are mounted using the two set screws.
(4) Check that the shaft tolerance of the shafts to which the hubs are mounted is the recommended tolerance shown in Table 8.

Table 8. Recommended fit tolerances

Fit		Fit		Fit	
Shaft tolerance	Hole tolerance	Shaft tolerance	Hole tolerance	Shaft tolerance	Hole tolerance
h6	H7	j6	G7	k6	+ 0.040
h7		j7		k7	+ 0.015

2. Mounting

See the mounting procedure for pilot bore products on the previous page.

ROLLER CHAIN COUPLINGS

Roller Chain Couplings

CONTENTS

Features 95
Structure/Materials 96
Model Number. 96
Transmission Capacity. 97, 98
Dimensions 99
Product Selection 100
Handling 101
Case Structure and Function. . . . 102
Lubrication. 102
Bore Machining Service . . . 103–104
Special Applications/Service Parts . . 105
Stainless Steel Type 106–109

Roller Chain Couplings

Features

Flexible couplings driven by Tsubaki's experience and technology, and composed of a two-strand roller chain wrapped onto two sprockets. The chain is a strong type manufactured for coupling use.

Outstanding durability

The coupling performs outstanding durability with the torque on the coupling shared with the surface-hardened teeth of the sprockets and the powerful roller chains that engage with the teeth.

Easy installation

Both shafts can be easily coupled or decoupled with a single joint pin inserted into or extracted from the roller chains.

Absorption of large misalignment

The clearances between the chains and sprockets and between chain components absorb the great positional misalignment of both shafts.

Wide variety

There are a total of 24 standard sizes—15 JIS-compliant sizes (CR4012 to CR16022) and 9 additional sizes (CR3812, CR24022 to CR40028).
(Roller chain shaft couplings: Conforms to JIS B 1456-1989)

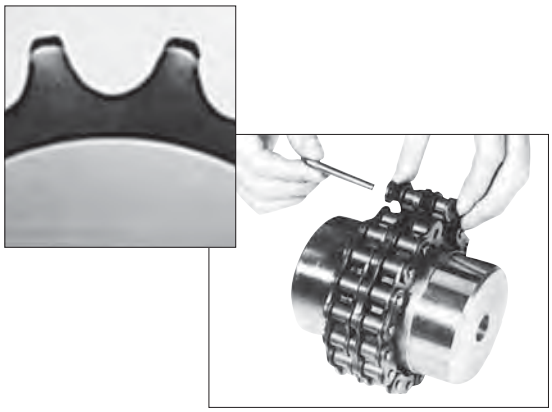

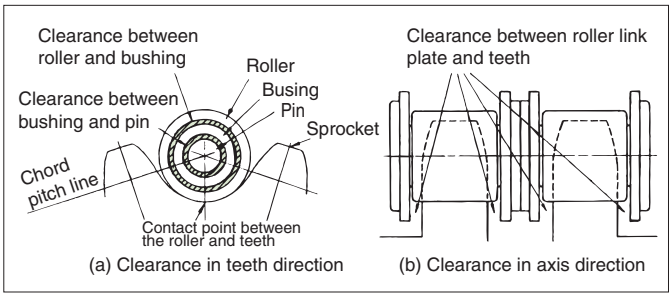

Structure/Materials

Body

The body is composed of two custom sprockets with hardened teeth and a custom two-strand roller chain. The custom parts provided with the body are a joint pin, and a clip or cotter pin. All the custom parts are also sold individually.

Case

The case is made of cast or die cast aluminum. It is divided into two parts, with a gasket (made of synthetic rubberized cork) applied to the join surfaces. The parts provided with the case are 4 to 6 hex cap bolts, and a custom oil seal. The oil seal and gasket are also sold individually. Lubrication grease must be purchased separately.

Be sure to mount the casing in the following cases.

(1) The coupling is rotated at high speed (See the transmission capacity table notes.).
(2) The coupling is used in an abrasive atmosphere, such as a place with dust and dirt.
(3) The coupling is used in a corrosive atmosphere, such as a humid place.

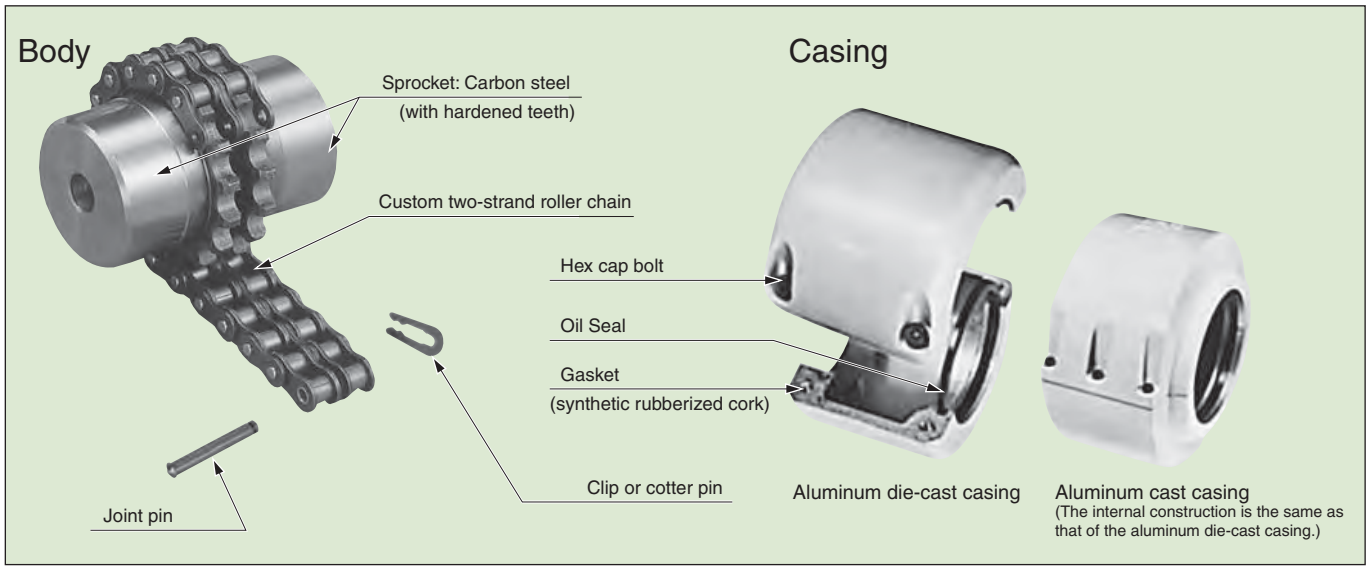

Model Number

Coupling (pilot bore models) **CR 38 12 H**

Chain coupling | Size | Sprocket teeth | H: Body

Place orders of body and casings separately.

Casing **CR3812 K**

Coupling model No. | Casing (Oil seal, packing, and mounting bolt included.)

Note: Cases for models CR4012 to CR16022 are labeled with a 'J' to indicate they are JIS-compliant.

Bore Machining Service

● Fit Bore Series —See page 103—

TSUBAKI offers 117 dimensions of standard bore finishing and deliver them within a short time in response to orders. The standard tolerance of bore finishing is based on H7 and support to the tolerances of press fitting too. Keyway tolerances are in conformity with new JIS Js9 and P9 and old JIS F7 and E9.

Eliminates time-consuming bore finishing.

● Other bore machining

Roller chain couplings with non-Fit Bore Series specifications can also be ordered.
Bore dimensions can also be freely selected.
Contact Tsubaki to request an individual estimate.

Transmission Capacity

Note: Be sure to follow the procedure on page 100 for the selection of couplings.

Model No.	Max. bore dia.	Max. allowable transmission torque at below 50 r/min. N·m	Unit	Rotation speed (r/min.)								
				1	5	10	25	50	100	200	300	400
CR3812	16	99.9	kW	0.01	0.05	0.11	0.26	0.52	0.79	1.21	1.58	1.89
			N·m	99.9	99.9	99.9	99.9	99.9	75.5	57.8	50.3	45.1
CR4012	22	217	kW	0.02	0.11	0.22	0.58	1.15	1.73	2.63	3.46	4.15
			N·m	217	217	217	217	217	165	126	110	99.1
CR4014	28	295	kW	0.03	0.16	0.32	0.79	1.58	2.36	3.59	4.72	5.66
			N·m	295	295	295	295	295	225	171	150	135
CR4016	32	386	kW	0.04	0.21	0.41	1.03	2.06	3.09	4.69	6.17	7.41
			N·m	386	386	386	386	386	295	224	196	177
CR5014	35	562	kW	0.06	0.3	0.6	1.5	3.0	4.48	6.8	8.95	10.7
			N·m	562	562	562	562	562	428	325	285	256
CR5016	40	735	kW	0.08	0.39	0.78	1.95	3.91	5.86	8.92	11.7	14.1
			N·m	735	735	735	735	735	560	426	373	337
CR5018	45	931	kW	0.1	0.5	0.99	2.48	4.95	7.43	11.3	14.9	17.8
			N·m	931	931	931	931	931	710	540	475	425
CR6018	56	1750	kW	0.18	0.93	1.87	4.67	9.33	14.0	21.3	28.0	33.6
			N·m	1750	1750	1750	1750	1750	1338	1018	892	803
CR6022	71	2370	kW	0.25	1.25	2.51	6.31	12.5	18.8	28.6	37.7	45.3
			N·m	2370	2370	2370	2370	2370	1796	1366	1201	1082
CR8018	80	3880	kW	0.41	2.07	4.14	10.3	20.7	31.0	47.2	62.1	74.5
			N·m	3880	3880	3880	3880	3880	2962	2255	1978	1779
CR8022	100	5580	kW	0.59	2.96	5.93	14.8	29.6	44.5	67.2	89	106
			N·m	5580	5580	5580	5580	5580	4252	3210	2834	2532
CR10020	110	8780	kW	0.93	4.66	9.33	23.3	46.6	70	106	140	168
			N·m	8780	8780	8780	8780	8780	6688	5064	4459	4013
CR12018	125	13200	kW	1.4	7.02	14	35.1	70.2	105	160	210	252
			N·m	13200	13200	13200	13200	13200	10032	7643	6688	6019
CR12022	140	17100	kW	1.81	9.07	18.1	45.3	90.7	136	206	272	326
			N·m	17100	17100	17100	17100	17100	12993	9841	8662	7787
CR16018	160	28600	kW	3.03	15.1	30.3	75.8	151	227	345	455	546
			N·m	28600	28600	28600	28600	28600	21688	16481	14490	13041
CR16022	200	41700	kW	4.43	22.1	44.3	110	221	333	506	665	799
			N·m	41700	41700	41700	41700	41700	31815	24172	21178	19084
CR20018	205	57000	kW	6.06	30.3	60.6	151	303	454	691	909	1090
			N·m	57000	57000	57000	57000	57000	43375	33009	28949	26035
CR20022	260	71900	kW	7.63	38.2	76.3	191	382	572	871	1140	1370
			N·m	71900	71900	71900	71900	71900	54649	41608	36305	32722
CR24022	310	129000	kW	13.7	68.8	137	344	688	1030	1570	2060	2470
			N·m	129000	129000	129000	129000	129000	98406	74999	65604	58996
CR24026	380	157000	kW	16.7	83.7	167	418	837	1250	1900	2510	3010
			N·m	157000	157000	157000	157000	157000	119425	90763	79935	71894
CR32022	430	255000	kW	27.2	136	272	680	1360	2040	2850	4080	4900
			N·m	255000	255000	255000	255000	255000	194902	136145	129934	117037
CR40020	470	494000	kW	52.6	263	526	1310	2630	3940	5990	7890	9470
			N·m	494000	494000	494000	494000	494000	376428	286142	251270	226191
CR40024	590	602000	kW	64	320	640	1600	3200	4800	7300	9600	
			N·m	602000	602000	602000	602000	602000	458592	348721	305728	
CR40028	700	717000	kW	76.2	380	762	1900	3800	5700	8690	11400	
			N·m	717000	717000	717000	717000	717000	544578	415121	363052	
Lubrication type				I	II		III					

Rotation speed (r/min.)														
500	600	800	1000	1200	1500	1800	2000	2500	3000	3600	4000	4800	5200	6000
2.26	2.58	3.19	3.88	4.41	5.35	6.25	6.73	8.12	9.44	11.0	12.0	14.0	14.8	16.7
43.2	41.1	38.1	37.1	35.1	34.1	33.2	32.1	31.0	30.1	29.2	28.7	27.9	27.2	26.6
4.96	5.67	7.01	8.53	9.68	11.6	13.7	14.8	17.9	20.7	24.1	26.3	30.8		
94.8	90.3	83.7	81.5	77.1	73.9	72.7	70.7	68.4	65.9	64.0	62.8	61.3		
6.77	7.72	9.56	11.64	13.21	15.8	18.7	20.2	24.4	28.3	32.9	35.9	42.1		
129	123	114	111	105	101	99.3	96.5	93.2	90.1	87.3	85.7	83.8		
8.85	10.1	12.5	15.3	17.3	21	24.4	26.3	31.9	37	43	46.9	54.9		
169	161	149	146	138	134	130	126	122	118	114	112	109		
12.8	14.7	18.1	22.1	25.1	30	35.4	38.3	46.2	53.6	62.4				
245	234	216	211	200	191	188	183	177	171	166				
16.8	19.2	23.8	28.9	32.9	39.9	46.4	50	60.6	70.4	81.6				
321	306	284	276	262	254	246	239	232	224	217				
21.3	24.4	30.1	36.6	41.6	50.5	58.8	63.4	76.8	89.2					
407	389	359	350	331	322	312	303	293	284					
40.1	45.9	56.8	69.1	78.4	95.2	111	120	145						
766	731	678	660	624	606	589	573	554						
54.1	61.9	76.5	93.1	105	128	149	161	195						
1034	986	914	889	836	815	791	769	745						
89	101	126	153	174	211	246	265							
1701	1608	1505	1462	1385	1344	1306	1266							
127	146	180	219	249	302	352	379							
2427	2325	2150	2092	1982	1924	1868	1810							
200	229	283	345	392	476	554								
3822	3646	3380	3296	3121	3032	2941								
302	345	426	519	590	716									
5771	5494	5088	4959	4697	4560									
390	446	551	671	762										
7452	7102	6580	6411	6067										
652	746	922	1122											
12458	11879	11011	10720											
954	1090	1350	1640											
18229	17356	16122	15669											
1300	1490	1840												
24840	23726	21974												
1640	1880													
31337	29936													
2960	3380													
56560	53821													
3600														
68789														

Lubrication type Ⅰ :
Apply grease regularly on a monthly basis.
Lubrication type Ⅱ :
Apply grease regularly on a weekly basis, or mount the casing filled with grease.
Lubrication type Ⅲ :
Mount the casing filled with grease.

Refer to page 102 for lubrication method.

Dimensions

Body (H)

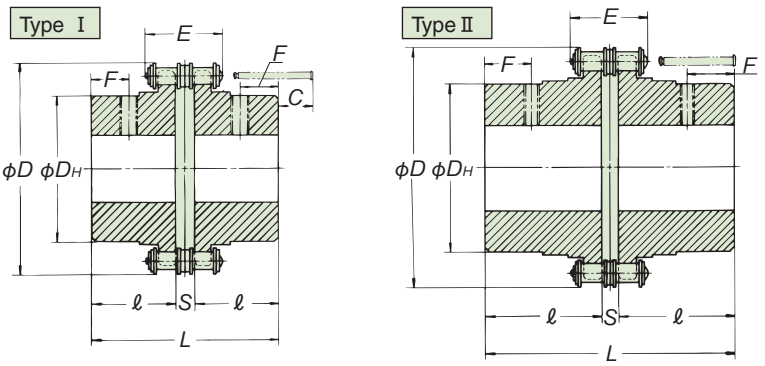

- The *C* dimension is the space needed to attach or remove the chain's joint pin.
- The *F* dimension is the recommended dimension for machining a tapped hole.

Unit: [mm]

Model no.	JIS code	Type	Pilot bore dia.	Bore dia. Min.	Bore dia. Max.	Moment of inertia kg·m²	Chain Pitch	Chain Max. width *E*	*D*	D_H	*L*	*ℓ*	*S*	*C*	*F*	Weight [kg]
CR 3812H	—	Ⅰ	8	9.5	16	5.60×10^{-5}	9.525	24.0	45	25	64.9	30	4.9	4	14	0.3
CR 4012H	4012		9	11	22	2.47×10^{-4}	12.70	33.1	61	35	79.4	36	7.4	10	16	0.8
CR 4014H	4014		9	11	28	4.53×10^{-4}			69	43	79.4	36		10	16	1.1
CR 4016H	4016		13	16	32	7.90×10^{-4}			77	50	87.4	40		6	20	1.6
CR 5014H	5014		13	16	35	1.37×10^{-3}	15.875	41.0	86	53	99.7	45	9.7	12	21	2.2
CR 5016H	5016			18	40	2.18×10^{-3}			96	60						2.8
CR 5018H	5018			18	45	3.53×10^{-3}			107	70						3.6
CR 6018H	6018		18	22	56	9.33×10^{-3}	19.05	51.1	128	85	123.5	56	11.5	15	26	6.5
CR 6022H	6022			28	71	2.16×10^{-2}			152	110						10.3
CR 8018H	8018		23	32	80	3.63×10^{-2}	25.40	65.3	170	115	141.2	63	15.2	30	26	13.8
CR 8022H	8022		28	40	100	8.00×10^{-2}			203	140	157.2	71		22	34	21.7
CR10020H	10020		33	45	110	1.61×10^{-1}	31.75	81.9	233	160	178.8	80	18.8	30	36	32.6
CR12018H	12018		43	50	125	2.68×10^{-1}	38.10	102.7	256	170	202.7	90	22.7	50	36	43.9
CR12022H	12022		53	56	140	5.93×10^{-1}			304	210	222.7	100		40	46	69.0
CR16018H	16018		58	63	160	1.05	50.80	131.7	341	224	254.1	112	30.1	68	42	96.3
CR16022H	16022		73	80	200	2.50			405	280	310.1	140		40	70	166.8
CR20018H	—	Ⅱ	85	88	205	4.60	63.50	160.6	426	294	519.5	241	37.5	—	100	294.4
CR20022H			95	98	260	1.07×10			507	374						461.6
CR24022H			117	120	310	2.70×10	76.20	197.3	608	420	751.1	353	45.1	—	150	871.4
CR24026H			147	150	380	5.70×10			705	520						1276.4
CR32022H			197	200	430	1.08×10^{2}	101.60	263.0	806	570	860.1	400	60.1	—	200	1791.2
CR40020H			247	250	470	2.29×10^{2}	127.0	332.3	932	640	1099.6	512	75.6	—	250	2862.5
CR40024H			297	300	590	4.95×10^{2}			1093	800						4294.6
CR40028H			347	350	700	9.78×10^{2}			1255	960						6019.4

Notes: 1. The pilot bores of the items in bold are normally in stock, while those in regular typeface are made to order. If you require a size larger than those specified, please consult TSUBAKI.
2. The range of bore diameters for the CR4012-H to CR16022-H conforms to JIS standards. However, the minimum bore diameter can be of larger bore than the pilot bore. The maximum bore diameter shows the allowable bore diameter for standard smooth transmission with no impact or reverse rotation.
3. The hub sizes (ϕD_H) of models with model numbers shown in non-bold text are reference values. The size used will depend on the bore diameter.
4. Moment of inertia values are for pilot bore products.

Casing (K)

Unit: [mm]

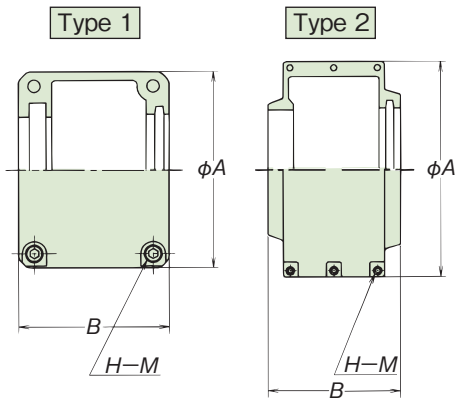

- Place orders of casing with the casing model numbers specified.

Model no.	Type	Moment of inertia kg·m²	*A*	*B*	*H−M*	Oil seal	Casing material	Weight [kg]
CR 3812K	1	1.55×10^{-4}	59	61	4−M5	Special type	Aluminum die-cast	0.19
CR 4012K		5.13×10^{-4}	75	75	4−M6			0.33
CR 4014K		6.53×10^{-4}	84					0.38
CR 4016K		8.58×10^{-4}	92					0.41
CR 5014K		1.29×10^{-3}	101	85				0.50
CR 5016K		1.81×10^{-3}	111					0.58
CR 5018K		2.35×10^{-3}	122					0.66
CR 6018K		4.85×10^{-3}	142	106	4−M8			0.96
CR 6022K		9.35×10^{-3}	167					1.3
CR 8018K		1.86×10^{-2}	186	130				2.0
CR 8022K		3.30×10^{-2}	220					2.5
CR10020K		6.60×10^{-2}	250	148				3.7
CR12018K	2	7.63×10^{-2}	307	181	*4−M10			3.3
CR12022K		1.29×10^{-1}	357					3.9
CR16018K		5.73×10^{-1}	406	250	6−M10	ZF48 ZF60	Aluminum alloy	14.7
CR16022K		1.11	472					17.2
CR20018K		1.42	496	280		Special type		22.2
CR20022K		2.41	578					26.6

Notes: 1. The casings of the items in regular typeface are made to order.
2. The ZF type oil seal is made by NOK Co.
3. The item marked * has 4 bolts and not 6, as indicated on the drawing.
4. Refer to page 105 of service parts for the bolt length.

Coating specifications:
Aluminum die-cast casings are bake coated with melamine resin.
Aluminum cast casings are bake coated with acrylic resin.
Coating color: Munsell 8.1YR7.6/15.2 orange yellow

Product Selection

1. Operating conditions required for selection

(1) Daily operating hours
(2) Load characteristics and type of motor
(3) Transmission power (kW) and rotation speed (r/min) or torque (N·m)
(4) Outer diameters of both shafts

2. Selection method

(1) Obtain the service factor from the table of service factors on the right-hand side according to the operating conditions.
(2) Multiply the transmission power (or torque) by the service factor and obtain the correction transmission power (or correction transmission torque).
(3) Use the transmission capacity table to select a coupling that satisfies the correction transmission power (or correction torque) at the operating rotation speed.
(4) If the required shaft diameter exceeds the maximum shaft diameter of the coupling selected, adopt a coupling a size larger.
(5) The contact pressure may become excessive if a standard key is used. Calculate the contact pressure of the key and consider the necessity of using a special key or spline.
(6) If the coupling is directly connected to the motor, select the coupling from the following table of recommended models for direct motor connection.

Table of service factors (SF)

Load characteristics	Source of power		
	Motor Turbine	Steam engine Gasoline engine (4 cylinders or more)	Diesel engine Gas engine
Low fluctuation, low impact, low starting torque, and no reverse rotation	1.0	1.5	2.0
Middle fluctuation, middle impact, and no reverse rotation (standard load)	1.5	2.0	2.5
High fluctuation, high impact, reverse rotation, and loaded starting	2.0	2.5	3.0

Note1. An increase according to the operating hour of the chain coupling (provided that the rotation speed is 50 r/min. or more).
8 to 16 hours/day: 0.5
16 hours or more/day: 1.0
2. The above table shows rough service factor standards. Decide on the service factor according to the operating conditions.

Reference: Relationship between torque, transmission, and rotation speed

$$T = \frac{60000 \times P}{2\pi \times n} \quad T = \left\{\frac{974 \times P}{n}\right\}$$

T : Torque N・m
P : Transmission power kW
n : Rotation speed r/min

3. Recommended coupling models for direct motor connection

Motor output kW	Motor shaft dia. mm	Model no.
0.1 0.2	11	CR3812
0.4	14	CR3812
0.75	19	CR4012
1.5	24	CR4014
2.2 3.7	28	CR4014

Motor output kW	Motor shaft dia. mm	Model no.
5.5 7.5	38	CR5016
11 15	42	CR5018
22	48	CR6018
30	55	CR6018
37 45	60	CR6022

Note: Values shown apply to totally enclosed fan-cooled 4-pole motors.

4. Backlash

Model no.	CR3812	CR4012	CR4014	CR4016	CR5014	CR5016	CR5018	CR6018	CR6022
Backlash (Angle°)	±1.02	±1.06	±0.90	±0.79	±0.86	±0.75	±0.66	±0.62	±0.51

Model no.	CR8018	CR8022	CR10020	CR12018	CR12022	CR16018	CR16022	CR20018	CR20022
Backlash (Angle°)	±0.58	±0.47	±0.50	±0.42	±0.34	±0.31	±0.26	±0.33	±0.27

Note: The above figures are calculated value and not guaranteed. Consult us for the backlash angles of other models.

5. Operating ambient temperature

− 10℃ to 60℃

If the operating ambient temperature range is other than the above, refer to page 105 for information on special applications.

Handling

1. Fit the oil seal onto the right or left sprocket with the seal's lip oriented toward the teeth.
   (When using the coupling in a vertical orientation, attach the oil seal to the top sprocket.)

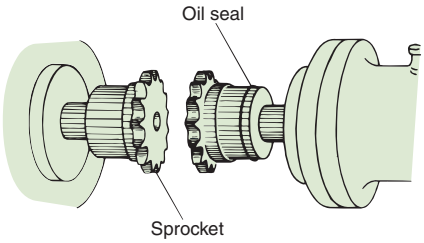

2. Bring the sprocket side faces into contact with each other and correct their angular misalignment and parallel misalignment.

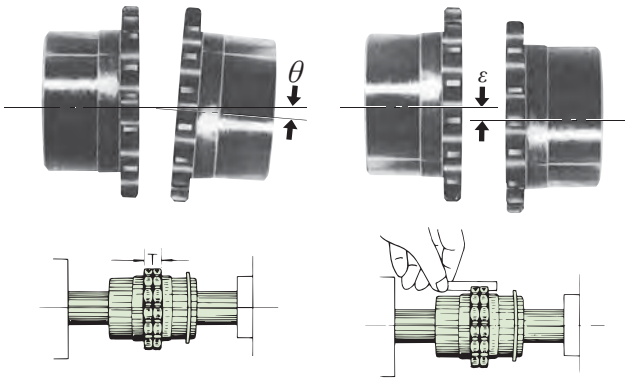

Correct the angle so that tooth side face dimension T is equal around the circumference.
Allowable angular misalignment θ
= No more than 1°

Place a straight edge on the tooth bottoms and adjust to eliminate any misalignment between them.
Allowable parallel misalignment ε
= No more than 2% of chain pitch (see values in table below)

When operating the coupling at a speed of at least one-third the maximum rotation speed given in the transmission capacity table on page 69, use allowable mounting error values of θ = 0.5° or less, and ε = 1% of chain pitch or less.

3. Separate the sprockets by a distance equal to dimension *S* (given in the table of dimensions), and fasten the sprockets in place with set screws.
4. Fill the dimension *S* gap between the sprockets with grease, and also apply grease to the teeth. Apply grease to the chain next, then wrap the chain onto the sprockets and fix with the joint pin.

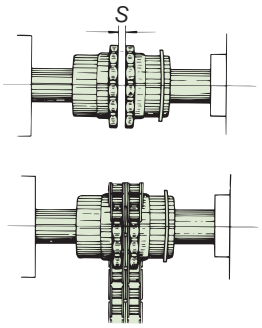

Insert the joint pin from oil seal side and confirm that the clip or cotter pin is securely fastened at counter oil seal side.

5. If using the case, fill both sides of the case with the specified amount of grease, and use the bolts to firmly attach both sides of the case to the sprockets. A small amount of grease leakage will occur at the start of operation but will soon stabilize. If leakage doesn't stop, check for attachment problems.

Operating cautions

1. When using the coupling for applications involving high rotary speeds or extreme vibrations, always apply a thread-locking fluid to the bolts before mounting the case.
2. Install a fixed cover in readiness for loose bolts, case damage or chain breaks.
3. Before removing the chain for installation or inspection, check that the equipment load side will not become dangerous when freed.
4. Inquire for information when using the coupling in an atmosphere not permitting grease leakage.
5. Always read the information in the user manual before starting installation or inspection work.

Precautions for additional processing work

Additional processing work on bore and keyway

In the case of processing and finishing the keyway and bore of a purchased product provided with a pilot bore (with no bore processed), perform the work based on the outer circumference of the hub. Be careful not to degrade tooth runout "a" or "b" in that case.

Do not perform additional processing work on the teeth and outer circumferenc

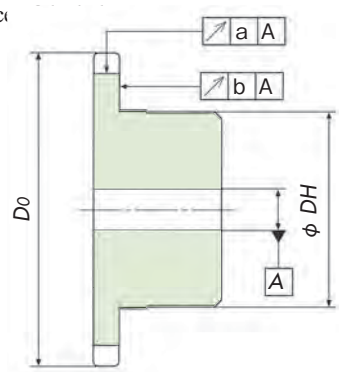

Allowable misalignment

Model No.	CR3812	CR4012	CR4014	CR4016	CR5014	CR5016	CR5018	CR6018	CR6022
Allowable parallel misalignment (ε) [mm]	0.190	0.254	0.254	0.254	0.318	0.318	0.318	0.381	0.381
Allowable angular misalignment (θ) [°]	1	1	1	1	1	1	1	1	1
Allowable end play (shaft direction displacement) [mm]	S±0.31	S±0.68	S±0.68	S±0.68	S±0.88	S±0.88	S±0.88	S±1.02	S±1.02

Model No.	CR8018	CR8022	CR10020	CR12018	CR12022	CR16018	CR16022	CR20018	CR20022
Allowable parallel misalignment (ε) [mm]	0.508	0.508	0.635	0.762	0.762	1.016	1.016	1.270	1.270
Allowable angular misalignment (θ) [°]	1	1	1	1	1	1	1	1	1
Allowable end play (shaft direction displacement) [mm]	S±1.32	S±1.32	S±1.52	S±2.02	S±2.02	S±2.52	S±2.52	$S^{+1.0}_{-3.0}$	$S^{+1.0}_{-3.0}$

Note 1. Each allowable error is acceptable on the condition that other errors are all zero.
2. When operating the coupling at a speed of at least one-third the maximum rotation speed given in the transmission capacity table on page 97, use allowable mounting error values of θ = 0.5° or less, and ε = 1% of chain pitch or less.

Case Structure and Function

The case is a split type that can be disconnected in the direction perpendicular to the shafts for handy mounting and inspection. The boss fitting holds the boss firmly and is precision-finished to ensure no parallel misalignment. The hole on the other side is a trapezoidal groove in which an oil seal is placed to prevent oil leakage. It holds the sprocket boss freely to prevent loss of coupling flexibility.
The split joint encloses a gasket to make it oil-tight, and is fastened by bolts.
Attaching a case to a chain coupling prevents lubricant spraying and dust from entering, enabling complete lubrication that extends the coupling's service life significantly. The case also protects the coupling from corrosive atmospheres, prevents hazards and improves appearance.
Inquire for information when attaching a case if the coupling will be frequently started/stopped, or subject to large amounts of vibrations.

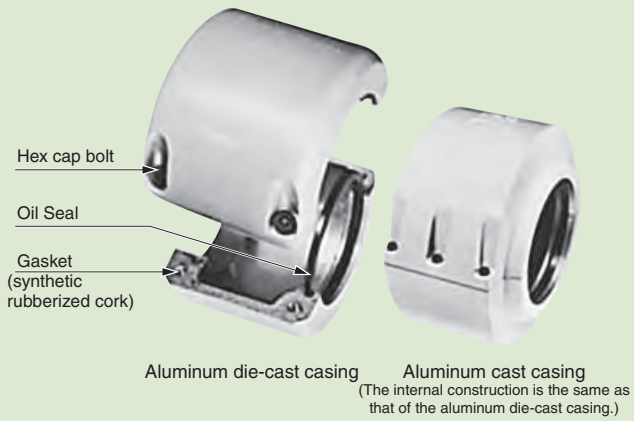

Be sure to mount the casing in the following cases.

(1) The coupling is rotated at high speed (See the transmission capacity table notes).
(2) The coupling is used in an abrasive atmosphere, such as a place with dust and dirt.
(3) The coupling is used in a corrosive atmosphere, such as a humid place.

Lubrication

There are three lubrication systems for chain couplings. The system to use depends on operating rotation speed. (See the transmission capacity table.)

Lubrication type Ⅰ:
Apply grease regularly on a monthly basis.
Lubrication type Ⅱ:
Apply grease regularly on a weekly basis, or mount the casing filled with grease.
Lubrication type Ⅲ:
Mount the casing filled with grease.

When using lubrication type III, use a grease with high mechanical stability and good lubrication performance since the centrifugal force will make it stick to the inner surface of the case, tending to degrade the lubrication performance. The grease brands below are recommended.
The amounts of grease to use (specified amounts) are shown in the table on the bottom-right.

Manufacturer	Grease name
Idemitsu Kosan	Daphne Grease MP 1 or 2
EMG Lubricants G.K.	Mobilux EP 1 or 2
Nippon Grease	Nigtight LE 1 or 2
JXTG Nippon Oil & Energy Corporation	Epnoc Grease AP 1 or 2
Showa Shell Sekiyu	Shell Alvania EP 1 or 2
Kyodo Yushi	Unilube DL 1 or 2
Cosmo Oil Lubricants	Cosmo Grease Dynamax EP 1 or 2

★ The product names above are trademarks or registered trademarks of their respective owners.

Grease change interval for lubrication type Ⅲ

Operating conditions	Grease change interval	
	First change	Change interval after first change
Operation at half or more of the maximum rotation speed	1000 hours	2000 hours
Operation at up to half of the maximum rotation speed	2000 hours	4000 hours

When the amounts below are applied, a small amount of grease leakage will occur at the start of operation but will soon stabilize.

Model no.	Amount of grease (kg)	Model no.	Amount of grease (kg)
CR 3812	0.04	CR 8018	0.6
CR 4012	0.07	CR 8022	0.8
CR 4014	0.08	CR10020	1.4
CR 4016	0.10	CR12018	2.6
CR 5014	0.12	CR12022	3.4
CR 5016	0.14	CR16018	6.6
CR 5018	0.20	CR16022	8.0
CR 6018	0.32	CR20018	10.1
CR 6022	0.40	CR20022	12.2

Fit Bore Series (with finished bore)

The Fit bore series includes an expanded range of bore sizes and clearer model numbers to make selection easier.

Model number display example

CR6022 - N H 35 J D2 X N G 40 F D2

Model No. Hub type

Bore tolerance

- F ··· F7
- G ··· G7
- H ··· H7
- M ··· M7
- N ··· N7
- J ··· JS7
- P ··· P7
- K ··· K7
- R ··· R7

Bore diameter

Bore diameters are in integer multiples of 1 mm.

Keyway tolerance

- J … New JIS Js9
- P … New JIS P9
- F … Old JIS F7
- E … Old JIS E9

Set screw position

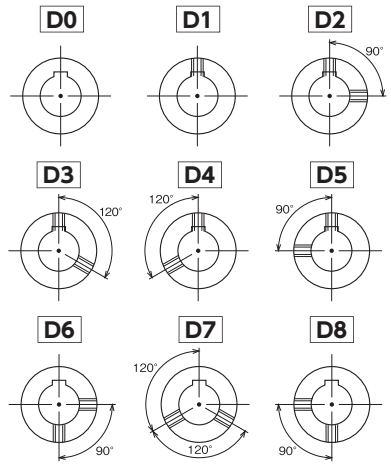

Standard bore diameters

Model No.	Bore diameter																						
	14	15	16	17	18	19	20	22	24	25	28	30	32	35	38	40	42	45	48	50	55	60	65
CR3812	●	●	●																				
CR4012	●	●	●	●	●	●	●	●															
CR4014	●	●	●	●	●	●	●	●	●	●	●												
CR4016			●	●	●	●	●	●	●	●	●	●	●										
CR5014			●	●	●	●	●	●	●	●	●	●	●	●									
CR5016					●	●	●	●	●	●	●	●	●	●	●	●							
CR5018					●	●	●	●	●	●	●	●	●	●	●	●	●	●					
CR6018								●	●	●	●	●	●	●	●	●	●	●	●	●	●		
CR6022											●	●	●	●	●	●	●	●	●	●	●	●	●
CR8018													●	●	●	●	●	●	●	●	●	●	●
CR8022																●	●	●	●	●	●	●	●
New JIS key width mm	5	5	5	5	6	6	6	6	8	8	8	8	10	10	10	12	12	14	14	14	16	18	18
Old JIS key width mm	5	5	5	5	5	5	5	7	7	7	7	7	10	10	10	10	12	12	12	12	15	15	18

* Keys are not included.

Standard screw positions

See page 104 for set screw positions that differ from the following table.

Bore diameter φ dmm	14	15	16	17	18	19	20	22	24	25	28	30	32	35	38	40	42	45	48	50	55	60	65
Set screw MX	M5	M5	M5	M5	M6	M6	M6	M6	M6	M6	M6	M6	M8	M8	M8	M8	M8	M8	M8	M8	M10	M10	M10
Old JIS key					M5	M5	M5																
CR3812FB																							
CR4012FB																							
CR4014FB																							
CR4016FB																							
CR5014FB																							
CR5016FB																							
CR5018FB																							
CR6018FB																							
CR6022FB																							
CR8018FB																							
CR8022FB																							

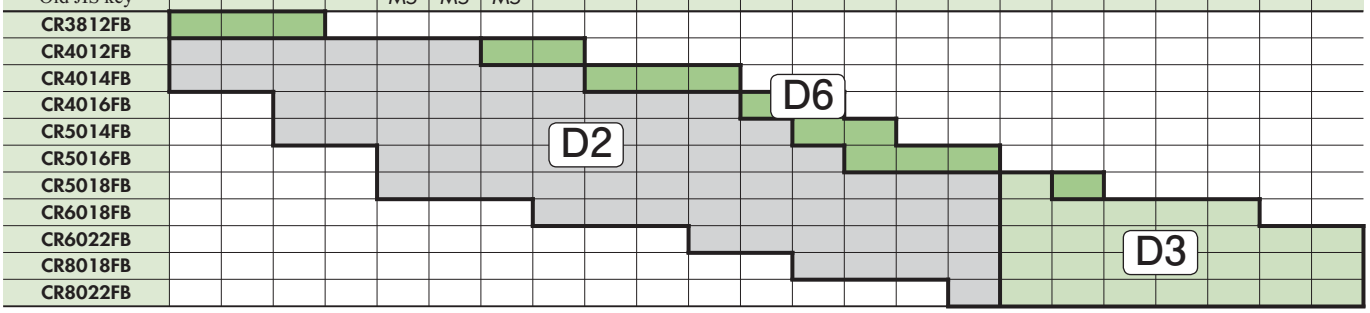

Products with special tolerances

The availability of products with special tolerances is shown below.
Sizes of up to CR20022 and maximum bore diameters of up to 260 mm are available.
See page 103 for the model numbering system.

Standard bore diameters

There are restrictions on the position of set screws depending on the bore diameter. See the following table for more information.

Model No.	Bore diameter range	Set screw position	Bore diameter (mm) 11	12	13	14	15	16	17	18	19	20	21	22	23	24	25	26	27	28	29	30	31	32	33	34	35	36	37	38	39	40	41	42	43	44	45	46	47	48	49	50
CR3812	11 to 16	D0	○	○	○	○	○	○																																		
		D1 to D5	○	○																																						
		D6	○	○	○	●	●	●																																		
		D7 to D8	○	○	○	○	○	○																																		
CR4012	11 to 22	D0	○	○	○	○	○	○	○	○	○	○	○	○																												
		D1	○	○	○	○	○	○	○	○	○																															
		D2	○	○	○	●	●	●	●	●	●																															
		D3 to D5	○	○	○	○	○	○	○	○	○																															
		D6	○	○	○	○	○	○	○	○	○	●	○	●																												
		D7 to D8	○	○	○	○	○	○	○	○	○	○	○	○																												
CR4014	11 to 28	D0	○	○	○	○	○	○	○	○	○	○	○	○	○	○	○	○	○	○																						
		D1	○	○	○	○	○	○	○	○	○	○	○	○	○																											
		D2	○	○	○	●	●	●	●	●	●	●	○	●	○																											
		D3 to D5	○	○	○	○	○	○	○	○	○	○	○	○	○																											
		D6	○	○	○	○	○	○	○	○	○	○	○	○	○	●	●	○	○	●																						
		D7 to D8	○	○	○	○	○	○	○	○	○	○	○	○	○	○	○	○	○	○																						
CR4016	16 to 32	D0						○	○	○	○	○	○	○	○	○	○	○	○	○	○	○	○	○																		
		D1						○	○	○	○	○	○	○	○	○	○	○	○	○	○																						
		D2						●	●	●	●	●	○	●	○	●	●	○	○	●	○																						
		D3 to D5						○	○	○	○	○	○	○	○	○	○	○	○	○	○																						
		D6						○	○	○	○	○	○	○	○	○	○	○	○	○	○	●	○	●																		
		D7 to D8						○	○	○	○	○	○	○	○	○	○	○	○	○	○	○	○	○																		
CR5014	16 to 35	D0						○	○	○	○	○	○	○	○	○	○	○	○	○	○	○	○	○	○	○	○															
		D1						○	○	○	○	○	○	○	○	○	○	○	○	○	○	○	○																				
		D2						●	●	●	●	●	○	●	○	●	●	○	○	●	○	●	○																				
		D3 to D5						○	○	○	○	○	○	○	○	○	○	○	○	○	○	○	○																				
		D6						○	○	○	○	○	○	○	○	○	○	○	○	○	○	○	○	●	○	○	●															
		D7 to D8						○	○	○	○	○	○	○	○	○	○	○	○	○	○	○	○	○	○	○	○															
CR5016	18 to 40	D0								○	○	○	○	○	○	○	○	○	○	○	○	○	○	○	○	○	○	○	○	○	○	○										
		D1								○	○	○	○	○	○	○	○	○	○	○	○	○	○	○	○	○																
		D2								●	●	●	○	●	○	●	●	○	○	●	○	●	○	●	○	○																
		D3 to D5								○	○	○	○	○	○	○	○	○	○	○	○	○	○	○	○	○																
		D6								○	○	○	○	○	○	○	○	○	○	○	○	○	○	○	○	○	●	○	○	●	○	●										
		D7 to D8								○	○	○	○	○	○	○	○	○	○	○	○	○	○	○	○	○	○	○	○	○	○	○										
CR5018	18 to 45	D0								○	○	○	○	○	○	○	○	○	○	○	○	○	○	○	○	○	○	○	○	○	○	○	○	○	○	○	○					
		D1								○	○	○	○	○	○	○	○	○	○	○	○	○	○	○	○	○	○	○	○	○	○	○	○	○	○	○						
		D2								●	●	●	○	●	○	●	●	○	○	●	○	●	○	●	○	○	●	○	○	●	○	●	○	○	○	○						
		D3								○	○	○	○	○	○	○	○	○	○	○	○	○	○	○	○	○	○	○	○	○	○	○	○	●	○	○						
		D4 to D5								○	○	○	○	○	○	○	○	○	○	○	○	○	○	○	○	○	○	○	○	○	○	○	○	○	○	○						
		D6								○	○	○	○	○	○	○	○	○	○	○	○	○	○	○	○	○	○	○	○	○	○	○	○	○	○	○	●					
		D7 to D8								○	○	○	○	○	○	○	○	○	○	○	○	○	○	○	○	○	○	○	○	○	○	○	○	○	○	○	○					
CR6018	22 to 56	D0												○	○	○	○	○	○	○	○	○	○	○	○	○	○	○	○	○	○	○	○	○	○	○	○	○	○	○	○	○
		D1												○	○	○	○	○	○	○	○	○	○	○	○	○	○	○	○	○	○	○	○	○	○	○	○	○	○	○	○	○
		D2												●	○	●	●	○	○	●	○	●	○	●	○	○	●	○	○	●	○	●	○	○	○	○	○	○	○	○	○	○
		D3												○	○	○	○	○	○	○	○	○	○	○	○	○	○	○	○	○	○	○	○	●	○	○	●	○	○	●	○	●
		D4 to D6												○	○	○	○	○	○	○	○	○	○	○	○	○	○	○	○	○	○	○	○	○	○	○	○	○	○	○	○	○
		D7 to D8												○	○	○	○	○	○	○	○	○	○	○	○	○	○	○	○	○	○	○	○	○	○	○	○	○	○	○	○	○
CR6022	28 to 71	D0 to D1																		○	○	○	○	○	○	○	○	○	○	○	○	○	○	○	○	○	○	○	○	○	○	○
		D2																		●	○	●	○	●	○	○	●	○	○	●	○	●	○	○	○	○	○	○	○	○	○
		D3																		○	○	○	○	○	○	○	○	○	○	○	○	○	○	●	○	○	●	○	○	●	○	●
		D4 to D8																		○	○	○	○	○	○	○	○	○	○	○	○	○	○	○	○	○	○	○	○	○	○	○
CR8018	32 to 80	D0 to D1																						○	○	○	○	○	○	○	○	○	○	○	○	○	○	○	○	○	○	○
		D2																						●	○	○	●	○	○	●	○	●	○	○	○	○	○	○	○	○	○	○
		D3																						○	○	○	○	○	○	○	○	○	○	●	○	○	●	○	○	●	○	●
		D4 to D8																						○	○	○	○	○	○	○	○	○	○	○	○	○	○	○	○	○	○	○
CR8022	40 to 100	D0 to D1																														○	○	○	○	○	○	○	○	○	○	○
		D2																														●	○	○	○	○	○	○	○	○	○	○
		D3																														○	○	●	○	○	●	○	○	●	○	●
		D4 to D8																														○	○	○	○	○	○	○	○	○	○	○

Model No.	Bore diameter range	Set screw position	Bore diameter [mm] 51	52	53	54	55	56	57	58	59	60	61	62	63	64	65	66	67	68	69	70	71	72	73	74	75	76	77	78	79	80	81	～	97	98	99	100
CR6018	22 to 56	D0 to D2	○	○	○	○	○	○																														
		D3	○	○	○	○	●	○																														
		D4 to D8	○	○	○	○	○	○																														
CR6022	28 to 71	D0 to D2	○	○	○	○	○	○	○	○	○	○	○	○	○	○	○	○	○	○	○	○	○															
		D3	○	○	○	○	●	○	○	○	○	●	○	○	○	○	●	○	○	○	○	○	○															
		D4 to D8	○	○	○	○	○	○	○	○	○	○	○	○	○	○	○	○	○	○	○	○	○															
CR8018	32 to 80	D0 to D2	○	○	○	○	○	○	○	○	○	○	○	○	○	○	○	○	○	○	○	○	○	○	○	○	○	○	○	○	○	○						
		D3	○	○	○	○	●	○	○	○	○	●	○	○	○	○	●	○	○	○	○	○	○	○	○	○	○	○	○	○	○	○						
		D4 to D8	○	○	○	○	○	○	○	○	○	○	○	○	○	○	○	○	○	○	○	○	○	○	○	○	○	○	○	○	○	○						
CR8022	40 to 100	D0	○	○	○	○	○	○	○	○	○	○	○	○	○	○	○	○	○	○	○	○	○	○	○	○	○	○	○	○	○	○	○	○	○	○	○	○
		D1 to D2	○	○	○	○	○	○	○	○	○	○	○	○	○	○	○	○	○	○	○	○	○	○	○	○	○	○	○	○	○	○	○	○	○			
		D3	○	○	○	○	●	○	○	○	○	●	○	○	○	○	●	○	○	○	○	○	○	○	○	○	○	○	○	○	○	○	○	○	○			
		D4 to D5	○	○	○	○	○	○	○	○	○	○	○	○	○	○	○	○	○	○	○	○	○	○	○	○	○	○	○	○	○	○	○	○	○			
		D6 to D8	○	○	○	○	○	○	○	○	○	○	○	○	○	○	○	○	○	○	○	○	○	○	○	○	○	○	○	○	○	○	○	○	○	○	○	○

Model No.	Bore diameter range	Set screw position
CR10020	45 to 110	D0 to D8
CR12022	56 to 140	D0 to D8
CR16022	80 to 200	D0 to D8
CR20018	88 to 205	D0 to D8
CR20022	98 to 260	D0 to D8

Model No.	Bore diameter range	Set screw position	Bore diameter (mm) 50 to 110	111 to 125
CR12018	50 to 125	D0	○	○
		D1 to D5	○	
		D6 to D8	○	○

Model No.	Bore diameter range	Set screw position	Bore diameter (mm) 63 to 159	160
CR16018	63 to 160	D0	○	○
		D1 to D5	○	
		D6 to D8	○	○

●= Standard (For new JIS normal type bore machining) ○= Option range

Special Applications

Floating shaft type

If the coupled devices are separated by a distance and operated horizontally without angular misalignment, a standard product can be used as the floating shaft type shown on the right by restricting the operating conditions.

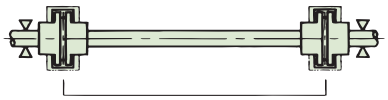

Operating conditions

1. The shaft is in horizontal operation.
2. The shaft in operation does not rotate in the reverse direction. The shaft may rotate in the reverse direction only after the shaft comes to a perfect stop.
3. Misalignment values:
   Angular misalignment $\theta = 0.5°$ or less
   Parallel misalignment $\varepsilon = 1\%$ of chain pitch or less
4. The maximum operating rotation speed and the mass of the floating portion are within the ranges specified in the table.
5. Decide the length and diameter of the shaft in comparison with equivalent standard machinery parts.

The allowable transmitted torque values are the standard values.

Model no.	Allowable mass of floating portion (kg)	Max. operating rotation speed (r/min)
CR 3812	19	250
CR 4012	36	250
CR 4014	35	200
CR 4016	35	200
CR 5014	62	150
CR 5016	62	150
CR 5018	61	150
CR 6018	83	100
CR 6022	79	100
CR 8011	136	50
CR 8022	128	50

Other types for special applications

Specifications	Applicable model	Content	Parts different from those of standard product
Heat resistant	CR4012 to CR10020	Used if the operating ambient temperature is –10°C to 150°C.	Special oil seal and gasket, body, modified case, other
Cold resistant		Used if the operating ambient temperature is –40°C to 60°C.	Special oil seal, body (special chain and sprockets), other
Casing rotation stopper (with pin)		To prevent grease leakage with the casing rotation stopper because the operation of the chain coupling is start and stop frequently under horizontal use.	Body, modified case, other
Vertical use		Used to prevent grease leakage from the casing if the chain coupling is mounted vertically.	Body, modified case, additional O-ring

Service Parts

Use the following dedicated parts at the time of servicing.

Service parts for Roller Chain Coupling

Part name (Symbol)	Model legend	Content
Dedicated roller chain (C)	CR3812 C	Dedicated two strand roller chains and the joint pin specified in this table are provided.
Joint pin (JP)	CR38 JP	A joint pin is provided along with a clip or cotter pin for retaining.
Oil seal (OR)	CR3812 OR	A dedicated rubber oil seal fit into the casing. The CR20018 or larger are made of felt.
Gasket (OS)	CR3812 OS	A synthetic rubberized cork sheet applied to the case join surfaces. (2 pcs/unit)

Sizes of hexagonal head bolts for casing

Model no.	Size	Model no.	Size
CR 3812	M 5×10	CR 8018	M 8×28
CR 4012	M 6×14	CR 8022	M 8×28
CR 4014	M 6×18	CR10020	M 8×28
CR 4016	M 6×18	CR12018	M10×35
CR 5014	M 6×18	CR12022	M10×35
CR 5016	M 6×18	CR16018	M10×45
CR 5018	M 6×18	CR16022	M10×45
CR 6018	M 8×25	CR20018	M10×45
CR 6022	M 8×25	CR20022	M10×45

Note 1.The sizes in the table are the screw name × bolt length.
2. The material is SCM435, strength grade of 12.9.

Stainless Steel Type Roller Chain Couplings

Stainless steel roller chain couplings with outstanding environmental resistance

Roller chains and sprockets are made of austenitic stainless steel, enabling use in harsh operating environments unsuited to conventional steel roller chain couplings.

Features

(1) Highly corrosion-resistant: Suited for use outdoors or in corrosive acid or alkaline atmospheres.
(2) Highly heat-resistant: Can be used in wide temperature range of –20 to 200°C.
(3) Clean quality: Highly rustproof, outstanding affinity for fluorinated greases used in food processing machinery and clean rooms.
(4) Rapid delivery: Models CR4012 to CR6022 can be delivered in two weeks (pilot bore models) or three weeks (machined bore models).
Models CR8018 to CR12022 can be delivered in four weeks (both pilot and machined bore models).

Chemical resistance table

Since chemical resistance changes somewhat according to the operating conditions, the information in this table is not guaranteed.
Determine your specification requirements after first checking chemical resistance under the actual operating conditions using this table as a reference. The data in this table applies to an ambient temperature of 20°C.

●: Chemical-resistant
▲: Chemical-resistant under some operating conditions
×: Not chemical-resistant

Coupling body \ Chemical/food name	Acetone	Alcohol	Ammonia water	Zinc chloride 50%	Ferric chloride 5%	Sodium chloride 5%	Hydrochloric acid 2%	Seawater	Hydrogen peroxid e 30%	Formic acid 50%	Chromic acid 5%	Acetic acid 10%	Calcium hypochlorite	Sodium hypochlorite 10%	Oxalic acid 10%	Nitric acid 5%	Vinegar	Potassium hydroxide 20%	Sodium hydroxide 25%	Concentrated nitric acid 65%	Boric acid 50%	Sulfuric acid 5%	Zinc sulfate 25%	Phosphoric acid 5%
Stainless steel type	●	●	●	▲	▲	●	×	▲	●	●	●	●	●	×	●	●	▲	●	●	●	●	×	●	●

Main applications: Water gates, food processing machinery (brewed/fermented foods), marine rigging equipment

Structure/Materials

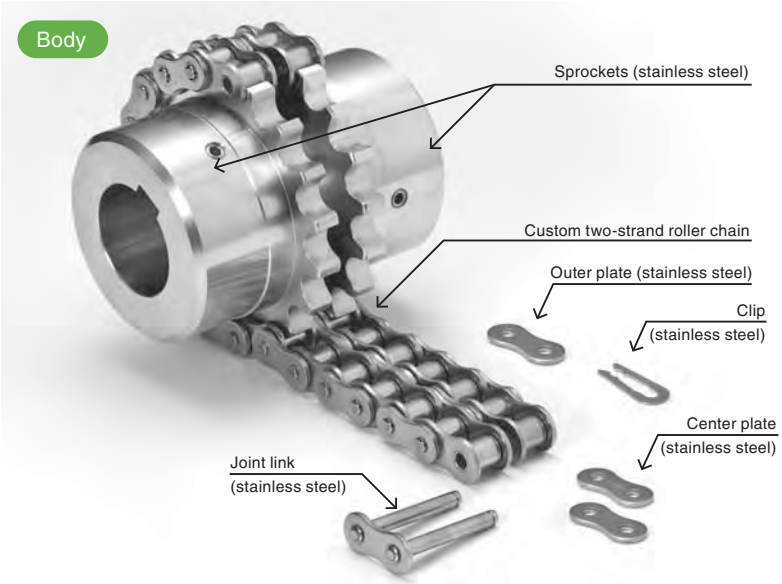

Model Number

Body (pilot bore models)

CR40 12 H - SS

- SS: Stainless steel type
- H: Body
- Number of sprocket teeth
- Chain number
- Chain coupling

Case

CR4012 K - SS

- Model No.
- Custom casing (Includes oil seal, gasket and mounting bolts.)

Note: Order the body and case separately.

Transmission Capacity

Model No.	Unit	Rotation speed [r/min]								
		1	5	10	25	50	100	200	300	400
CR4012H-SS	kW	0.01	0.04	0.08	0.19	0.39	0.58	0.88	1.16	1.39
	N・m	74	74	74	74	74	55	42	37	33
CR4014H-SS	kW	0.01	0.05	0.11	0.26	0.53	0.79	1.20	1.58	1.90
	N・m	101	101	101	101	101	76	57	50	45
CR4016H-SS	kW	0.01	0.07	0.14	0.35	0.69	1.04	1.58	2.07	2.49
	N・m	132	132	132	132	132	99	75	66	59
CR5014H-SS	kW	0.02	0.10	0.20	0.50	1.00	1.50	2.28	3.00	
	N・m	191	191	191	191	191	144	109	96	
CR5016H-SS	kW	0.03	0.13	0.26	0.66	1.31	1.97	2.99	3.93	
	N・m	250	250	250	250	250	188	143	125	
CR5018H-SS	kW	0.03	0.17	0.33	0.83	1.66	2.49	3.79	4.99	
	N・m	317	317	317	317	317	238	181	159	
CR6018H-SS	kW	0.06	0.32	0.63	1.58	3.17	4.75	7.22		
	N・m	605	605	605	605	605	454	345		
CR6022H-SS	kW	0.09	0.43	0.86	2.15	4.30	6.44	9.80		
	N・m	821	821	821	821	821	615	468		
CR8018H-SS	kW	0.14	0.70	1.40	3.50	7.01	10.5			
	N・m	1338	1338	1338	1338	1338	1004			
CR8022H-SS	kW	0.20	1.01	2.02	5.05	10.1	15.1			
	N・m	1929	1929	1929	1929	1929	1447			
CR10020H-SS	kW	0.31	1.57	3.13	7.83	15.7				
	N・m	2992	2992	2992	2992	2992				
CR12018H-SS	kW	0.47	2.37	4.74	11.8	23.7				
	N・m	4526	4526	4526	4526	4526				
CR12022H-SS	kW	0.62	3.08	6.16	15.4	30.8				
	N・m	5883	5883	5883	5883	5883				

Note: When selecting a product, use the product selection procedure given on page 108.

Dimensions

■ Body (H-SS)

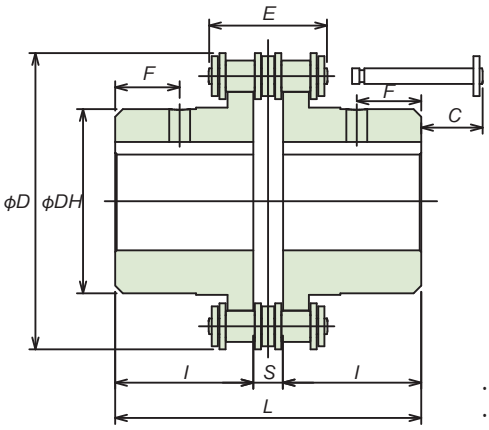

・The *C* dimension is the space needed to attach or remove the chain's joint link.
・The *F* dimension is the recommended dimension for machining a tapped hole.

Model No.	Pilot bore diameter	Bore diameter range		Moment of inertia	Chain		*D*	*DH*	*L*	*l*	*S*	*C*	*F*	Weight
		Minimum	Maximum	kg·m²	Pitch	Maximum width *F*								kg
CR4012H-SS	9	11	22	2.38×10^{-4}	12.7	32.6	61	35	79.4	36	7.4	9	16	0.78
CR4014H-SS	9	11	28	4.37×10^{-4}	12.7	32.6	69	43	79.4	36	7.4	9	16	1.11
CR4016H-SS	13	16	32	7.64×10^{-4}	12.7	32.6	77	50	87.4	40	7.4	5	20	1.53
CR5014H-SS	13	16	35	1.33×10^{-3}	15.875	40.4	86	53	99.7	45	9.7	10	21	2.11
CR5016H-SS	13	18	40	2.11×10^{-3}	15.875	40.4	96	60	99.7	45	9.7	10	21	2.68
CR5018H-SS	13	18	45	3.41×10^{-3}	15.875	40.4	107	70	99.7	45	9.7	10	21	3.51
CR6018H-SS	18	22	56	9.03×10^{-3}	19.05	50.4	128	85	123.5	56	11.5	13	26	6.36
CR6022H-SS	18	28	71	2.10×10^{-2}	19.05	50.4	152	110	123.5	56	11.5	13	26	10.09
CR8018H-SS	23	32	80	3.63×10^{-2}	25.40	65.3	170	115	141.2	63	15.2	30	26	13.8
CR8022H-SS	28	40	100	8.00×10^{-2}	25.40	65.3	203	140	157.2	71	15.2	22	34	21.7
CR10020H-SS	33	45	110	1.61×10^{-1}	31.75	81.9	233	160	178.8	80	18.8	30	36	32.6
CR12018H-SS	43	50	125	2.68×10^{-1}	38.10	102.7	256	170	202.7	90	22.7	50	36	43.9
CR12022H-SS	53	56	140	5.93×10^{-1}	38.10	102.7	304	210	222.7	100	22.7	40	46	69.0

Dimensions

■ Case (K-SS)

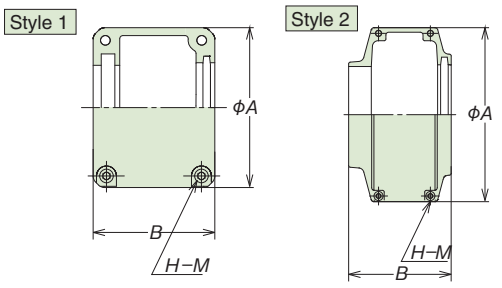

● Specify the case model number when ordering a case.
Coating type: Melamine resin bake coating
Coating color: Munsell 8.1YR7.6/15.2 orange yellow

Model No.	Style	Moment of inertia kg·m²	A	B	H-M	Oil seal	Case material	Weight kg
CR4012K-SS	1	5.13×10^{-4}	75	75	4-M6	Special shape	Die cast aluminum	0.33
CR4014K-SS	1	6.53×10^{-4}	84	75				0.38
CR4016K-SS	1	8.58×10^{-4}	92	75				0.41
CR5014K-SS	1	1.29×10^{-3}	101	85				0.50
CR5016K-SS	1	1.81×10^{-3}	111	85				0.58
CR5018K-SS	1	2.35×10^{-3}	122	85				0.66
CR6018K-SS	1	4.85×10^{-3}	142	106	4-M8			0.96
CR6022K-SS	1	9.35×10^{-3}	167	106				1.30
CR8018K-SS	1	1.86×10^{-2}	186	130				2.0
CR8022K-SS	1	3.30×10^{-2}	220	130				2.5
CR10020K-SS	1	6.60×10^{-2}	250	148				3.7
CR12018K-SS	2	7.63×10^{-2}	307	181	4-M10			3.3
CR12022K-SS	2	1.29×10^{-1}	357	181				3.9

Product Selection

1. Operating conditions required for product selection

(1) Daily operation time
(2) Load type and motor type
(3) Transmitted power [kW]/rotation speed [r/min], torque [N·m]
(4) Diameters of both shafts

2. Selection method

(1) Find the service factor corresponding to the operating conditions in the table on the right.
(2) Multiply the transmitted power (or torque) by the service factor to calculate the correction transmission power (or correction torque).
(3) Use the transmission capacity table to select a coupling that satisfies the correction transmission power (or correction torque) at the operating rotation speed.
(4) If the required shaft diameter exceeds the maximum shaft diameter of the selected coupling, use the next coupling size up.
(5) The contact pressure may become excessive when a standard key is used, so calculate the key contact pressure and determine whether a special key or spline must be used.

Service factor (SF) table

Load type	Motor type		
	Motor turbine	Steam engine/ gasoline engine (4 cylinders or more)	Diesel engine/ gas engine
Low variation, low shock, low starting torque, no reversing	1.0	1.5	2.0
Moderate variation, moderate shock, no reversing (most typical case)	1.5	2.0	2.5
High variation, high shock, reversing with load applied, starting with load applied	2.0	2.5	3.0

Notes 1. Value to add to service factor to account for chain coupling operation time (only for operation at 50 r/min or faster)
8 to 16 hours per day: 0.5
16 hours or more per day: 1.0
2. The service factors in the table above are general guidelines. Determine the service factor based on your actual operating conditions.

Reference: Relationship between torque, transmitted power and rotation speed

$$T = \frac{60000 \times P}{2\pi \times n} \qquad T = \left\{\frac{974 \times P}{n}\right\}$$

T : Torque [N·m]
P : Transmitted power [kW]
n : Rotation speed [r/min]

3. Backlash

Model No.	CR4012	CR4014	CR4016	CR5014	CR5016	CR5018	CR6018	CR6022	CR8018	CR8022	CR10020	CR12018	CR12022
Backlash (angle, degrees)	±1.06	±0.90	±0.79	±0.86	±0.75	±0.66	±0.62	±0.51	±0.58	±0.47	±0.50	±0.42	±0.34

Note: The values above are estimates, not guaranteed values.

4. Operating temperature range

	Without case	With case
Operating temperature (°C)	−20 to 200	−10 to 80

Note: Contact Tsubaki for information about operation at temperatures above 80°C with the case.

Handling

1. When using the coupling in the case, fit the oil seal onto the right or left sprocket with the seal's lip oriented toward the teeth. **(When using the coupling in a vertical orientation, attach the oil seal to the top sprocket.)**

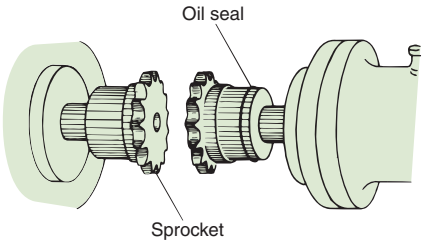

2. Bring the sprocket side faces into contact with each other and correct their angular misalignment and parallel misalignment.

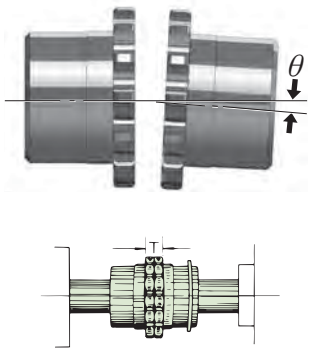

Correct the angle so that tooth side face dimension T is equal around the circumference.
Allowable angular misalignment θ
= No more than 1°

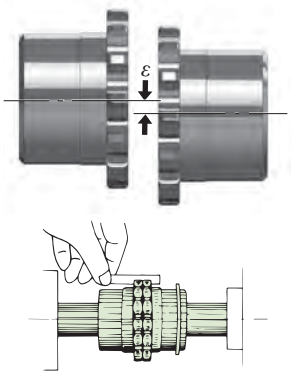

Place a straight edge on the tooth bottoms and adjust to eliminate any misalignment between them.
Allowable parallel misalignment ε
= No more than 2% of chain pitch (see values in table below)

3. Separate the sprockets by a distance equal to dimension *S* (given in the table of dimensions), and fasten the sprockets in place with set screws.

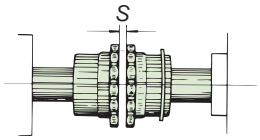

4 Fill the dimension *S* gap between the sprockets with grease, and also apply grease to the teeth. Apply grease to the chain next, then wrap the chain onto the sprockets. (Wrap the chain onto the sprockets while the sprockets are separated by the dimension *S* distance.) Insert the joint link into the first chain strand. Insert the two center plates. Insert the joint link into the second chain strand. Insert the outer plate into the joint link protruding from the chain, and attach the clip.

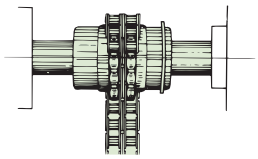

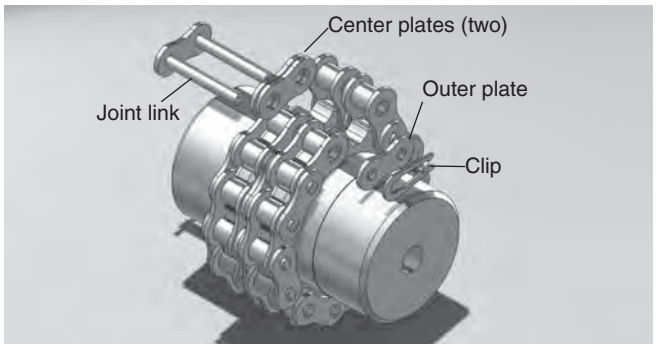

5. If using the case, fill both sides of the case with the specified amount of grease, and use the bolts to firmly attach both sides of the case to the sprockets. A small amount of grease leakage will occur at the start of operation but will soon stabilize. If leakage doesn't stop, check for attachment problems.

Model No.	CR4012	CR4014	CR4016	CR5014	CR5016	CR5018	CR6018	CR6022	CR8018	CR8022	CR10022	CR12018	CR12022
Allowable parallel misalignment (ε) [mm]	0.254	0.254	0.254	0.318	0.318	0.318	0.381	0.381	0.508	0.508	0.635	0.762	0.762
Allowable angular misalignment (θ) [°]	1	1	1	1	1	1	1	1	1	1	1	1	1
Allowable end play (shaft direction displacement) [mm]	S±0.68	S±0.68	S±0.68	S±0.88	S±0.88	S±0.88	S±1.02	S±1.02	S±1.32	S±1.32	S±1.52	S±2.02	S±2.02

Lubrication

Chain couplings can also be used without a case by applying grease. If service life and safety are concerns, consider using chain couplings with a case. The approximate amounts of grease to use are shown below. Recommended replacement times are also shown. Use grease of high safety and lubrication ability. Recommended grease types are shown on the right.

Model No.	Amount kg
CR4012	0.07
CR4014	0.08
CR4016	0.10
CR5014	0.12
CR5016	0.14
CR5018	0.20
CR6018	0.32

Model No.	Amount kg
CR6022	0.40
CR8018	0.60
CR8022	0.80
CR10020	1.40
CR12018	2.60
CR12022	3.40

Replacement times	
First replacement	Subsequent replacements
2000 hours	4000 hours

When the amounts above are applied, a small amount of grease leakage will occur at the start of operation but will soon stabilize.

Manufacturer	Grease name
Idemitsu Kosan	Daphne Coronex EP 1 or 2
EMG Marketing	Mobilux EP 1 or 2
Nippon Grease	Nigtight LE 1 or 2
JX Nippon Oil & Energy Corporation	Epnoc Grease AP 1 or 2
Showa Shell Sekiyu	Shell Alvania EP 1 or 2
Kyodo Yushi	Unilube DL 1 or 2
Cosmo Oil Lubricants	Cosmo Grease Dynamax EP 1 or 2

The recommended grease types for special applications are shown below.

	Manufacturer	Grease name
Food grease	Balbis	Power Food Grease
	NOK Klüber	Klüberfood NH1 94-301
Water-resistant food grease	NOK Klüber	Klüberfood NH1 64-422
	Sumico Lubricant	White Alcom Grease No.2
Water-resistant grease	Sumico Lubricant	Moly FM-HD Grease No. 1
Heat-resistant grease	Idemitsu Kosan	Daphne Eponex SR2 (–20 to 200°C)
	JX Nippon Oil & Energy Corporation	Pyronoc Universal (–10 to 200°C)
Fluorinated grease for clean room use	Sumico Lubricant	Sumitec F936

★ The product names above are trademarks or registered trademarks of their respective owners.

NYLON CHAIN COUPLINGS

Nylon Chain Couplings

CONTENTS

Features 112
Structure/Materials 112
Model Number. 112
Transmission Capacity. 113, 114
Dimensions 115, 116
Product Specifications. 116
Product Selection 117
Handling 117

Nylon Chain Couplings

Outstanding features of Tsubaki's nylon chain couplings

Support short distances between shafts.

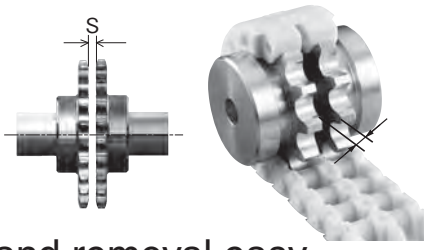

The simple structure consists only of two sprockets connected by a nylon chain, so can be used even when the shafts are a short distance apart.
Using nylon chain couplings for connections also enables more compact overall equipment sizes.

Chain wraps onto sprockets, making attachment and removal easy.

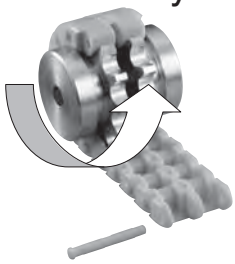

The couplings are assembled just by wrapping the nylon chain around the outer edges of the sprockets and inserting a joint pin.
Removing the coupling or repairing/replacing the nylon chain also require very little effort—just remove the joint pin and take the nylon chain off the sprockets.
During equipment maintenance, the drive and driven devices connected to the coupling can both be disconnected without having to move them.

Lightweight, low backlash, long service life

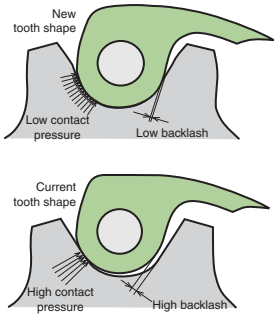

The E type and H type have sprockets made of extra super duralumin and plastic chains, creating low weight and moment of inertia.
Backlash has been reduced relative to standard nylon chain couplings, reducing the contact pressure between the chain and sprockets to enable longer service life.
Since torque is transmitted through a plastic chain, less oscillation in servomotor drive applications can be expected.
(Wrapped couplings characteristically reduce the transmitted torque as the rotary speed increases, so care is needed during high-speed use.)

Produce higher torque from the same length.

The transmitted torque can be increased by increasing the number of sprocket teeth, enabling use of larger coupling sizes without changing the distance between the shafts in the equipment.

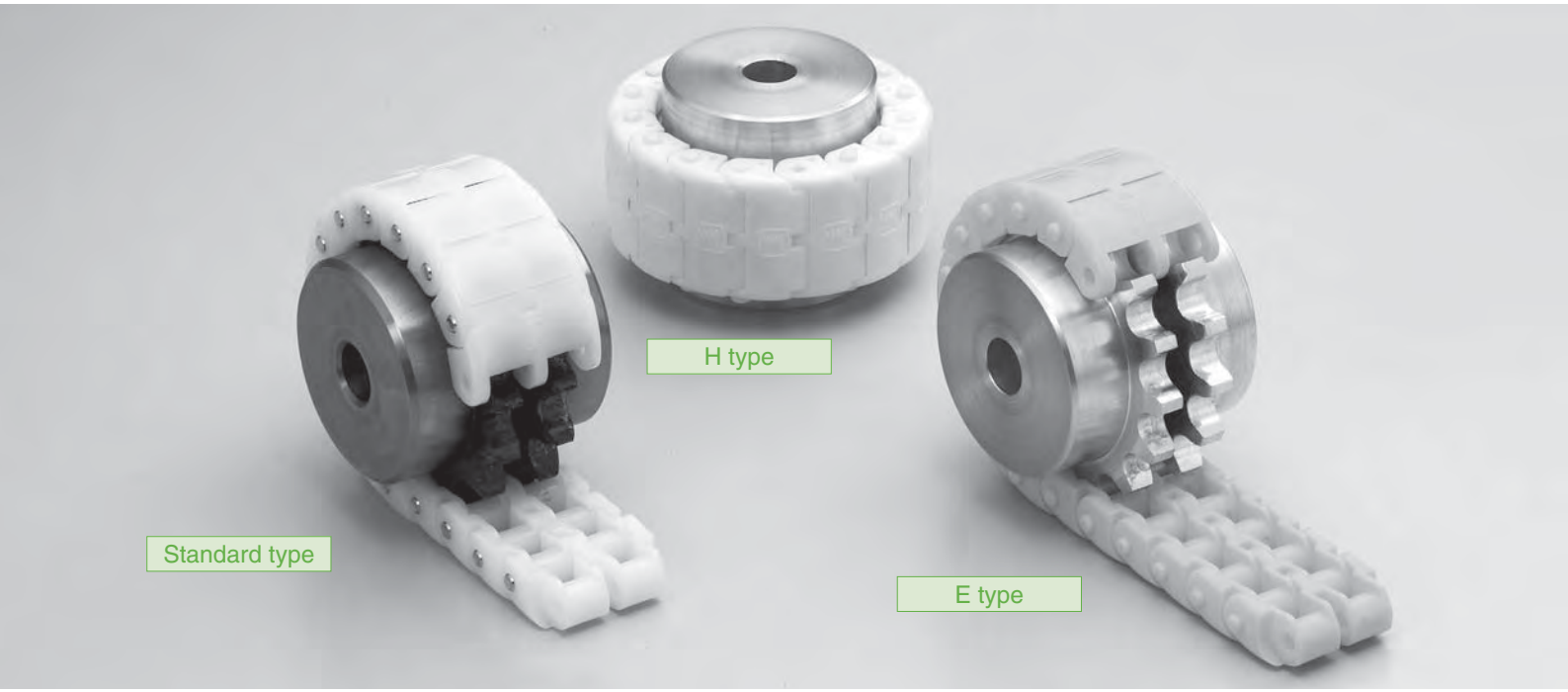

Features

Economical flexible couplings consisting of a plastic chain wrapped onto sprockets. The chains are made of polyacetal and other leading engineering plastics.

<Standard type>

Lineup

There are 29 models available in sizes ranging from RS35 to RS60.

<E type>

High torque

A new tooth shape (see diagram below) has been developed that boosts allowable transmitted torque by about 30% relative to the standard type. The new design enables the same torque output from couplings two sizes smaller (see Chart 1).

Long life

Service life is over three times longer than standard type couplings of the same size.

<H type>

Environmental resistance

The chains are made Hytrel® thermoplastic elastomer. They can be used at an ambient temperature range of –20 to +110°C, and have outstanding chemical resistance.

<E/H types>

Ultra-lightweight

The bodies are made of extra super duralumin, reducing weight by about half relative to the standard type (see Chart 2).
Since smaller sizes can also be used, this lightweight material enables major weight reductions.

Easy mounting

The E type's allowable mounting error is nearly twice as large as for the standard type.
The Hytrel® chains used in the H type create an allowable error 5 times larger than for the standard type.

Environmentally friendly

Chains have been made 100% plastic, making disposal after use simple.
Their longer service life also enables more effective use of resources.

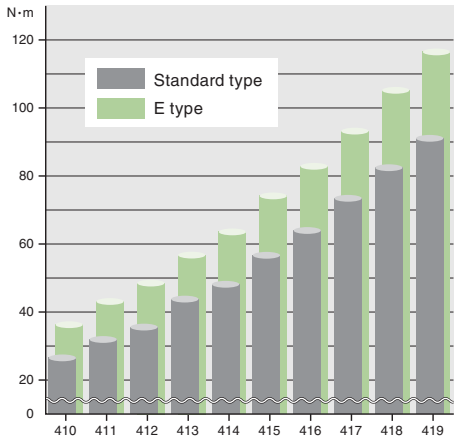

Table 1. Allowable transmitted torque comparison (E type)
(Allowable torque up to 100 r/min)

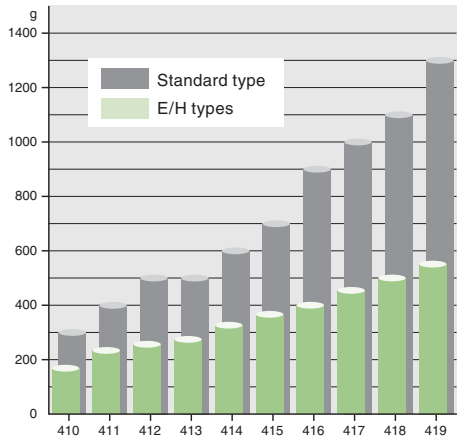

Table 2. Weight comparison (E/H types)

Structure/Materials

Type	Chain size	Body sprockets		Nylon chain		
		Material	Tooth shape	Material	Joint pin material	Color
Standard type	#35, 40, 60	Carbon steel	S tooth shape	Polyacetal	Carbon steel	White
E type	#40	Extra super duralumin	New tooth shape	Polyacetal	Polyacetal	Yellow
H type				Hytrel®	Hytrel®	Ivory

* Hytrel® is a thermoplastic polyester elastomer developed by DuPont, and a registered trademark of DuPont.
* The E and H type chains are 100% plastic. Only the pin is carbon steel in current models.

Model Number

CN E 4 15

- CN: Nylon chain coupling
- E: Type [No code]: Standard type; E: E type; H: H type
- 4: Chain size
- 15: Number of teeth/links

Transmission Capacity

Standard type

Model No.	Maximum bore diameter mm	Allowable transmitted torque at up to 100 rpm [N·m]	Unit	Rotation speed [r/min]																	
				100	200	300	400	500	600	700	800	900	1200	1500	1800	2000	2500	3000	3600	4000	5000
CN310	12	6.86	kW	0.07	0.14	0.22	0.29	0.36	0.40	0.44	0.47	0.51	0.61	0.70	0.79	0.85	0.98	1.1	1.2	1.3	1.6
			N·m	6.86	6.86	6.86	6.86	6.86	6.35	5.97	5.67	5.40	4.87	4.45	4.18	4.04	3.73	3.50	3.31	3.19	3.00
CN311	14	8.82	kW	0.09	0.18	0.28	0.37	0.46	0.51	0.56	0.61	0.65	0.79	0.9	1.0	1.1	1.3	1.4	1.6	1.7	2.0
			N·m	8.82	8.82	8.82	8.82	8.82	8.17	7.67	7.29	6.94	6.26	5.73	5.38	5.19	4.79	4.50	4.26	4.10	3.85
CN312	16.5	10.8	kW	0.11	0.23	0.34	0.45	0.56	0.63	0.69	0.75	0.80	0.96	1.1	1.2	1.3	1.5	1.7	2.0	2.1	2.5
			N·m	10.8	10.8	10.8	10.8	10.8	10.0	9.4	8.9	8.5	7.6	7.0	6.6	6.3	5.9	5.5	5.2	5.0	4.7
CN313	18	12.7	kW	0.13	0.27	0.40	0.53	0.67	0.74	0.81	0.88	0.95	1.1	1.3	1.5	1.6	1.8	2.0	2.3	2.5	2.9
			N·m	12.7	12.7	12.7	12.7	12.7	11.8	11.1	10.5	10.0	9.0	8.3	7.8	7.5	6.9	6.5	6.2	5.9	5.6
CN314	16.5	14.7	kW	0.15	0.31	0.46	0.62	0.77	0.86	0.94	1.0	1.1	1.3	1.5	1.7	1.8	2.1	2.4	2.7	2.9	3.4
			N·m	14.7	14.7	14.7	14.7	14.7	13.6	12.8	12.1	11.6	10.4	9.5	9.0	8.6	8.0	7.5	7.1	6.8	6.4
CN315	19	16.7	kW	0.17	0.35	0.52	0.70	0.87	0.97	1.1	1.2	1.2	1.5	1.7	1.9	2.1	2.4	2.7	3.0	3.2	3.8
			N·m	16.7	16.7	16.7	16.7	16.7	15.4	14.5	13.8	13.1	11.8	10.8	10.2	9.8	9.1	8.5	8.0	7.7	7.3
CN316	20	18.6	kW	0.19	0.39	0.58	0.78	0.97	1.1	1.2	1.3	1.4	1.7	1.9	2.1	2.3	2.6	3.0	3.4	3.6	4.3
			N·m	18.6	18.6	18.6	18.6	18.6	17.2	16.2	15.4	14.7	13.2	12.1	11.4	11.0	10.1	9.5	9.0	8.7	8.1
CN317	24	21.6	kW	0.23	0.45	0.68	0.90	1.1	1.3	1.4	1.5	1.6	1.9	2.2	2.5	2.7	3.1	3.5	3.9	4.2	4.9
			N·m	21.6	21.6	21.6	21.6	21.6	20.0	18.7	17.8	17.0	15.3	14.0	13.1	12.7	11.7	11.0	10.4	10.0	9.4
CN410	16.5	25.4	kW	0.27	0.53	0.79	1.1	1.3	1.5	1.6	1.7	1.9	2.2	2.6	2.9	3.1	3.6	4.0	4.6	4.9	5.8
			N·m	25.4	25.1	25.1	25.1	25.1	23.5	21.9	20.8	20.0	17.9	16.4	15.4	14.8	13.7	12.9	12.1	11.7	11.0
CN411	20	30.6	kW	0.32	0.64	0.96	1.3	1.6	1.8	2.0	2.1	2.3	2.7	3.1	3.5	3.8	4.4	4.9	5.6	6.0	7.0
			N·m	30.6	30.6	30.6	30.6	30.6	28.3	26.6	25.3	24.1	21.7	19.9	18.7	18.0	16.6	15.6	14.8	14.2	13.4
CN412	22	36.4	kW	0.38	0.76	1.1	1.5	1.9	2.1	2.3	2.5	2.7	3.2	3.7	4.2	4.6	5.2	5.9	6.7	7.1	8.3
			N·m	36.4	36.4	36.4	36.4	36.4	34.0	31.9	30.0	28.9	25.8	23.8	22.2	21.8	19.8	18.6	17.6	17.0	15.9
CN413	20	42.6	kW	0.45	0.89	1.3	1.8	2.2	2.5	2.7	2.9	3.2	3.8	4.3	4.9	5.2	6.1	6.8	7.7	8.3	9.7
			N·m	42.6	42.6	42.6	42.6	42.6	39.4	37.0	35.2	33.5	30.0	27.7	25.8	25.1	23.1	21.7	20.5	19.9	18.6
CN414	24	49.3	kW	0.52	1.0	1.5	2.1	2.6	2.9	3.2	3.4	3.7	4.4	5.1	5.7	6.1	7.1	7.9	9.1	9.7	11.3
			N·m	49.3	49.3	49.3	49.3	49.3	46.1	43.3	40.8	39.2	35.0	32.2	30.3	29.2	27.0	25.2	24.2	23.1	21.5
CN415	28.5	56.6	kW	0.59	1.2	1.8	2.4	3.0	3.3	3.6	3.9	4.2	5.1	5.8	6.5	7.0	8.1	9.3	10.4	11.2	13.0
			N·m	56.6	57.1	57.1	57.1	57.1	52.9	49.6	47.1	44.9	40.4	37.0	34.7	33.5	30.9	29.6	27.6	26.7	24.9
CN416	30	64.3	kW	0.67	1.3	2.0	2.7	3.4	3.8	4.1	4.5	4.8	5.7	6.6	7.4	7.9	9.2	10.4	11.7	12.6	—
			N·m	64.3	64.3	64.3	64.3	64.3	60.1	55.9	53.1	51.0	45.6	42.0	39.2	37.8	35.1	33.0	31.1	30.1	—
CN417	32	72.5	kW	0.76	1.5	2.3	3.0	3.8	4.2	4.6	5.0	5.4	6.5	7.4	8.3	8.9	10.4	11.7	13.2	14.2	—
			N·m	72.5	72.5	72.5	72.5	72.5	67.2	63.1	60.0	57.6	51.5	47.4	44.2	42.7	39.6	37.2	35.0	33.9	—
CN418	35	81.3	kW	0.85	1.7	2.6	3.4	4.3	4.7	5.2	5.6	6.1	7.2	8.3	9.3	10.0	11.6	13.0	14.8	15.9	—
			N·m	81.3	81.3	81.3	81.3	81.3	75.3	70.7	66.6	64.5	57.6	53.1	49.6	47.8	44.2	41.5	39.3	38.0	—
CN419	39.5	90.5	kW	0.95	1.9	2.8	3.8	4.7	5.3	5.8	6.3	6.8	8.1	9.2	10.5	11.2	12.9	14.6	16.5	—	—
			N·m	90.5	90.5	90.5	90.5	90.5	83.8	78.7	74.8	71.8	64.2	58.8	55.5	53.6	49.5	46.4	43.7	—	—
CN610	30	102	kW	1.1	2.1	3.1	4.1	5.1	6.1	7.0	7.9	8.8	11.3	13.6	15.6	16.9	19.6	21.8	23.4	24.1	—
			N·m	102	101	100	99.0	98.0	97.1	95.3	94.4	93.5	90.2	86.4	82.9	80.9	75.0	69.4	62.2	57.6	—
CN611	32	116	kW	1.2	2.4	3.6	4.7	5.8	6.9	8.0	8.9	10.0	12.7	15.2	17.6	18.9	21.8	23.9	25.5	—	—
			N·m	116	115	114	113	111	110	109	107	106	101	97.0	93.2	90.3	83.2	76.1	67.7	—	—
CN612	32	132	kW	1.4	2.7	4.1	5.3	6.6	7.8	9.0	10.1	11.2	14.3	17.0	19.5	21.0	23.9	26.0	27.3	—	—
			N·m	132	131	130	127	126	124	123	120	119	114	109	103	100	91.3	82.8	72.4	—	—
CN613	35	149	kW	1.6	3.1	4.5	5.9	7.3	8.7	10.0	11.2	12.4	15.8	18.7	21.2	22.7	25.8	27.7	28.5	—	—
			N·m	149	146	144	142	140	138	136	134	132	126	119	113	109	98.5	88.0	75.5	—	—
CN614	39.5	166	kW	1.7	3.4	5.1	6.6	8.2	9.7	11.1	12.4	13.8	17.4	20.7	23.3	25.0	27.9	29.6	—	—	—
			N·m	166	164	161	158	157	154	151	148	147	138	132	124	119	106	94.3	—	—	—
CN615	45.5	181	kW	1.9	3.8	5.5	7.3	9.0	10.5	12.1	13.6	15.0	19.0	22.2	25.1	26.7	29.5	30.9	—	—	—
			N·m	181	179	176	174	171	168	165	162	159	151	142	133	128	113	98.5	—	—	—
CN616	47.5	201	kW	2.1	4.1	6.1	7.9	9.7	11.6	13.1	14.7	16.3	20.5	24.0	26.8	28.4	31.1	32.0	—	—	—
			N·m	201	197	193	189	186	184	179	176	173	163	153	142	135	119	102	—	—	—
CN617	47.5	218	kW	2.3	4.5	6.6	8.6	10.6	12.6	14.3	15.9	17.6	22.0	25.6	28.4	29.9	32.3	—	—	—	—
			N·m	218	214	210	206	202	200	195	190	187	175	163	151	143	123	—	—	—	—
CN618	55	236	kW	2.5	4.8	7.1	9.3	11.4	13.5	15.3	17.2	19.0	23.5	27.5	30.3	31.9	33.9	—	—	—	—
			N·m	236	231	227	223	219	215	209	205	202	187	175	161	152	130	—	—	—	—
CN619	55	255	kW	2.7	5.2	7.7	10.1	12.3	14.4	16.4	18.4	20.2	24.8	28.6	31.4	32.8	34.2	—	—	—	—
			N·m	255	250	245	241	234	230	224	220	214	198	182	167	156	131	—	—	—	—

E type

Model No.	Maximum bore diameter mm	Allowable transmitted torque at up to 100 rpm [N·m]	Unit	Rotation speed [r/min]																	
				100	200	300	400	500	600	700	800	900	1200	1500	1800	2000	2500	3000	3600	4000	5000
CNE410	16.5	36.3	kW	0.38	0.75	1.1	1.5	1.9	2.1	2.3	2.5	2.7	3.2	3.7	4.1	4.4	5.1	5.8	6.5	7.0	8.2
			N·m	36.3	35.9	35.9	35.9	35.9	33.6	31.3	29.7	28.6	25.6	23.4	22.0	21.2	19.6	18.4	17.4	16.8	15.7
CNE411	20	42.6	kW	0.45	0.89	1.3	1.8	2.2	2.5	2.7	2.9	3.2	3.8	4.3	4.9	5.2	6.1	6.8	7.8	8.3	9.7
			N·m	42.6	42.6	42.6	42.6	42.6	39.4	37.0	35.2	33.5	30.2	27.6	26.0	25.0	23.1	21.7	20.6	19.8	18.6
CNE412	22	49.1	kW	0.51	1.0	1.5	2.1	2.6	2.9	3.2	3.4	3.7	4.4	5.0	5.6	6.2	7.0	7.9	9.0	9.6	11.3
			N·m	49.1	49.1	49.1	49.1	49.1	45.9	43.1	40.6	39.0	34.8	32.1	29.9	29.4	26.7	25.2	23.8	22.9	21.5
CNE413	20	57.5	kW	0.6	1.2	1.8	2.4	3.0	3.3	3.7	4.0	4.3	5.1	5.9	6.6	7.1	8.2	9.2	10.4	11.3	13.1
			N·m	57.5	57.5	57.5	57.5	57.5	53.2	50.0	47.5	45.3	40.5	37.3	34.9	33.8	31.3	29.3	27.7	26.9	25.1
CNE414	24	64.1	kW	0.67	1.3	2.0	2.7	3.4	3.8	4.1	4.4	4.8	5.7	6.6	7.4	7.9	9.2	10.3	11.9	12.6	14.7
			N·m	64.1	64.1	64.1	64.1	64.1	59.9	56.3	53.0	50.9	45.5	41.9	39.3	38.0	35.0	32.7	31.4	30.0	28.0
CNE415	28.5	73.5	kW	0.77	1.6	2.3	3.1	3.9	4.3	4.7	5.1	5.5	6.6	7.5	8.5	9.1	10.5	12.1	13.5	14.5	17.0
			N·m	73.5	74.3	74.3	74.3	74.3	68.7	64.5	61.3	58.4	52.5	48.1	45.1	43.5	40.2	38.5	35.9	34.7	32.4
CNE416	30	83.6	kW	0.88	1.8	2.6	3.5	4.4	4.9	5.3	5.8	6.2	7.5	8.6	9.6	10.3	12.0	13.5	15.2	16.4	—
			N·m	83.6	83.6	83.6	83.6	83.6	78.1	72.7	69.1	66.3	59.3	54.6	51.0	49.2	45.7	42.9	40.4	39.1	—
CNE417	32	94.3	kW	1.0	2.0	3.0	4.0	4.9	5.5	6.0	6.5	7.1	8.4	9.7	10.8	11.6	13.5	15.2	17.2	18.5	—
			N·m	94.3	94.3	94.3	94.3	94.3	87.3	82.0	77.9	74.9	66.9	61.6	57.5	55.5	51.5	48.4	45.6	44.1	—
CNE418	35	106	kW	1.1	2.2	3.3	4.4	5.5	6.1	6.7	7.3	7.9	9.4	10.9	12.1	13.0	15.0	16.9	19.2	20.7	—
			N·m	106	106	106	106	106	97.8	91.9	86.6	83.9	74.9	69.1	64.4	62.2	57.4	53.9	51.0	49.4	—
CNE419	39.5	118	kW	1.2	2.5	3.7	4.9	6.2	6.8	7.5	8.1	8.8	10.5	12.0	13.6	14.6	16.8	18.9	21.4	—	—
			N·m	118	118	118	118	118	109	102	97.2	93.4	83.5	76.4	72.2	69.6	64.3	60.3	56.8	—	—

H type

Model No.	Maximum bore diameter mm	Allowable transmitted torque at up to 100 rpm [N·m]	Unit	Rotation speed [r/min]																	
				100	200	300	400	500	600	700	800	900	1200	1500	1800	2000	2500	3000	3600	4000	5000
CNH410	16.5	12.7	kW	0.13	0.26	0.39	0.53	0.66	0.74	0.80	0.87	0.94	1.1	1.3	1.4	1.6	1.8	2.0	2.3	2.5	2.9
			N·m	12.7	12.6	12.6	12.6	12.6	11.8	10.9	10.4	10.0	8.9	8.2	7.7	7.4	6.9	6.4	6.1	5.9	5.5
CNH411	20	15.3	kW	0.16	0.32	0.48	0.64	0.80	0.89	0.98	1.1	1.1	1.4	1.6	1.8	1.9	2.2	2.5	2.8	3.0	3.5
			N·m	15.3	15.3	15.3	15.3	15.3	14.2	13.3	12.7	12.1	10.9	9.9	9.3	9.0	8.3	7.8	7.4	7.1	6.7
CNH412	22	18.2	kW	0.19	0.38	0.57	0.76	0.95	1.1	1.2	1.3	1.4	1.6	1.9	2.1	2.3	2.6	2.9	3.3	3.6	4.2
			N·m	18.2	18.2	18.2	18.2	18.2	17.0	16.0	15.0	14.4	12.9	11.9	11.1	10.9	9.9	9.3	8.8	8.5	8.0
CNH413	20	21.3	kW	0.22	0.45	0.67	0.89	1.1	1.2	1.4	1.5	1.6	1.9	2.2	2.4	2.6	3.0	3.4	3.9	4.2	4.9
			N·m	21.3	21.3	21.3	21.3	21.3	19.7	18.5	17.6	16.8	15.0	13.8	12.9	12.5	11.6	10.9	10.2	10.0	9.3
CNH414	24	24.7	kW	0.26	0.52	0.77	1.0	1.3	1.4	1.6	1.7	1.8	2.2	2.5	2.9	3.1	3.5	4.0	4.6	4.8	5.6
			N·m	24.7	24.7	24.7	24.7	24.7	23.1	21.6	20.4	19.6	17.5	16.1	15.1	14.6	13.5	12.6	12.1	11.5	10.8
CNH415	28.5	28.3	kW	0.30	0.60	0.90	1.2	1.5	1.7	1.8	2.0	2.1	2.5	2.9	3.3	3.5	4.0	4.7	5.2	5.6	6.5
			N·m	28.3	28.6	28.6	28.6	28.6	26.4	24.8	23.6	22.5	20.2	18.5	17.4	16.7	15.5	14.8	13.8	13.3	12.5
CNH416	30	32.2	kW	0.34	0.67	1.0	1.3	1.7	1.9	2.0	2.2	2.4	2.9	3.3	3.7	4.0	4.6	5.2	5.9	6.3	—
			N·m	32.2	32.2	32.2	32.2	32.2	30.1	28.0	26.6	25.5	22.8	21.0	19.6	18.9	17.6	16.5	15.5	15.0	—
CNH417	32	36.3	kW	0.38	0.76	1.1	1.5	1.9	2.1	2.3	2.5	2.7	3.2	3.7	4.2	4.5	5.2	5.8	6.6	7.1	—
			N·m	36.3	36.3	36.3	36.3	36.3	33.6	31.5	30.0	28.8	25.7	23.7	22.1	21.3	19.8	18.6	17.5	17.0	—
CNH418	35	40.6	kW	0.43	0.85	1.3	1.7	2.1	2.4	2.6	2.8	3.0	3.6	4.2	4.7	5.0	5.8	6.5	7.4	8.0	—
			N·m	40.6	40.6	40.6	40.6	40.6	37.6	35.3	33.3	32.3	28.8	26.6	24.8	23.9	22.1	20.7	19.6	19.0	—
CNH419	39.5	45.3	kW	0.47	0.95	1.4	1.9	2.4	2.6	2.9	3.1	3.4	4.0	4.6	5.2	5.6	6.5	7.3	8.2	—	—
			N·m	45.3	45.3	45.3	45.3	45.3	41.9	39.4	37.4	35.9	32.1	29.4	27.8	26.8	24.7	23.2	21.9	—	—

Dimensions

Standard type

Type A

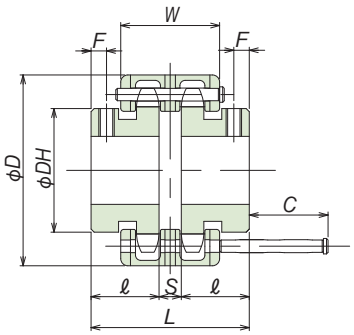

Type B

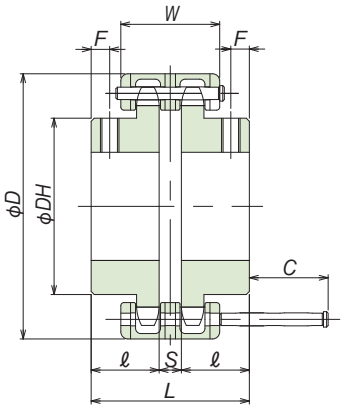

Chain dimensions

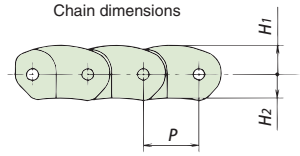

Chain size	H_1	H_2	P	Pin dia.
3	5.15	4.00	9.525	2.5
4	6.34	5.46	12.70	4.0
6	9.98	8.20	19.05	4.0

- The *C* dimension is the space needed to attach or remove the chain's joint pin.
- The *F* dimension is the dimension for machining a set screw hole.

Unit: [mm]

Model No.	Type	Bore dia. Pilot bore	Bore dia. Max. bore	Moment of inertia kg·m²	D	DH	L	ℓ	S	W	F	C	Weight [kg]
CN310	A	8.0	12.0	2.5×10^{-5}	39.6	25.0	46.0	20.0	6.0 ±0.4	23.2	6.0	12.3	0.2
CN311			14.0	3.0×10^{-5}	42.7	27.0							
CN312			16.5	4.3×10^{-5}	45.8	31.0							0.3
CN313		9.5	18.0	5.5×10^{-5}	48.9	32.0							
CN314	B		16.5	6.3×10^{-5}	52.0	30.0							
CN315			19.0	9.3×10^{-5}	55.1	35.0							0.4
CN316			20.0	1.2×10^{-4}	58.2	37.0							
CN317			24.0	1.6×10^{-4}	61.3	41.0							0.5
CN410	A	9.5	16.5	8.0×10^{-5}	52.0	32.0	51.2	22.0	7.2 ±0.8	32.0	5.0	22.8	0.3
CN411			20.0	1.2×10^{-4}	56.0	37.0							0.4
CN412			22.0	1.6×10^{-4}	60.0	40.0							0.5
CN413	B	9.5	20.0	2.0×10^{-4}	64.0	37.0					6.0		
CN414			24.0	2.7×10^{-4}	68.0	42.0							0.6
CN415		12.7	28.5	3.6×10^{-4}	72.0	46.0							0.7
CN416			30.0	4.9×10^{-4}	77.0	50.0							0.9
CN417			32.0	5.9×10^{-4}	81.0	54.0							1.0
CN418			35.0	7.3×10^{-4}	85.0	57.0							1.1
CN419			39.5	9.3×10^{-4}	89.0	62.0							1.3
CN610	A	12.7	30.0	5.8×10^{-4}	78.6	49.0	73.5	32.0	9.5 ±0.6	47.5	8.0	35.0	1.2
CN611			32.0	8.1×10^{-4}	84.8	51.0							1.4
CN612	B			1.07×10^{-3}	91.1								1.6
CN613		16.0	35.0	1.46×10^{-3}	97.2	57.0							1.9
CN614			39.5	1.94×10^{-3}	103.4	62.0							2.2
CN615			45.5	2.55×10^{-3}	109.5	68.0							2.5
CN616			47.5	3.28×10^{-3}	115.7	73.0							2.9
CN617				3.88×10^{-3}	121.6								3.1
CN618			55.0	5.75×10^{-3}	128.0	83.0	89.5	40.0				24.0	4.3
CN619				6.55×10^{-3}	134.1								4.6

Note 1. All products come with pilot bores as standard.
2. Finished holes, keyway, and set screw holes can be processed by request, provided that the processing charges will be claimed separately. (Standard bore tolerance will be H8 unless otherwise specified.)
3. Moment of inertia and weight values apply to pilot bore products.
4. Orders of nylon chains for replacement are accepted.

E/H types

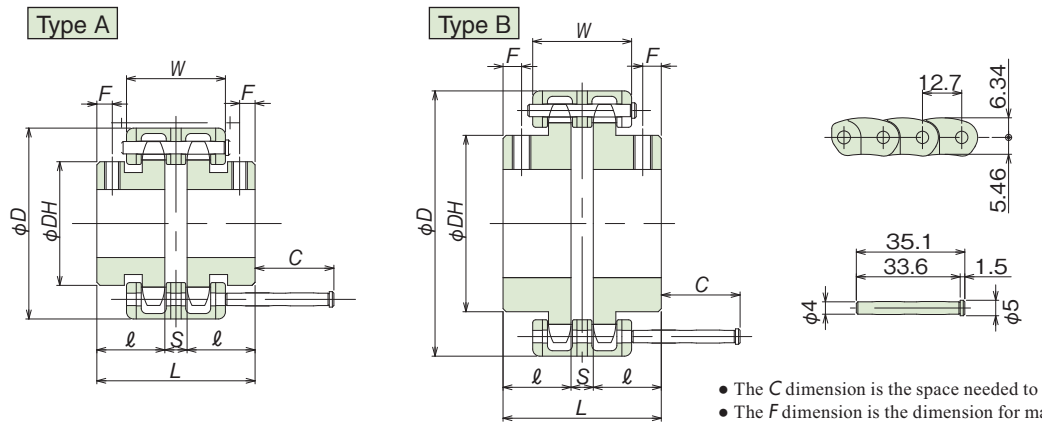

- The *C* dimension is the space needed to attach or remove the chain's joint pin.
- The *F* dimension is the dimension for machining a set screw hole.

Unit: [mm]

Model No. E type	Model No. H type	Type	Bore dia. Pilot bore dia.	Bore dia. Max.	Moment of inertia kg·m²	D	Do	DH	L	ℓ	S	W	F	C	Weight g
CNE410	**CNH410**	A	9.5	16.5	4.85×10^{-5}	51.8	46.2	32.0	51.2	22.0	7.1 ±0.8	32.0	5.0	22.8	180
CNE411	**CNH411**			20.0	6.86×10^{-5}	55.9	50.2	36.0							220
CNE412	**CNH412**			22.0	9.11×10^{-5}	60.1	54.1	40.0							250
CNE413	**CNH413**	B	12.5	20.0	11.3×10^{-5}	64.2	58.1	37.0					6.0		270
CNE414	**CNH414**			24.0	14.9×10^{-5}	68.3	62.2	42.0							310
CNE415	**CNH415**			28.5	19.2×10^{-5}	72.4	66.2	46.0							360
CNE416	**CNH416**			30.0	24.3×10^{-5}	76.5	70.2	50.0							400
CNE417	**CNH417**			32.0	30.4×10^{-5}	80.6	74.2	54.0							450
CNE418	**CNH418**			35.0	37.0×10^{-5}	84.7	78.2	58.0							500
CNE419	**CNH419**			39.5	46.0×10^{-5}	88.8	82.2	62.0							560

Notes 1. All models come with pilot bores as standard.
2. Finished holes, keyways and set screw holes are machined to order.
3. Moment of inertia and weight values apply to products with pilot bores.
4. Replacement chains can also be ordered.

Product Specifications

Type	Body sprocket material	Chain material and color	Joint pin material	Dimensions / Allowable rotation speed	Power transmission ratio	Weight ratio	Inertia/weight ratio
Standard type	Carbon steel	Polyacetal White	Carbon steel	Same as current models	1	1	1
E type	Extra super duralumin	Polyacetal Yellow	Polyacetal		1.3 to 1.43	0.41 to 0.48	0.48 to 0.59
H type	Extra super duralumin	Hytrel® Ivory	Hytrel®		0.5	0.41 to 0.48	0.48 to 0.59

Type	Allowable mounting error: Angular misalignment θ	Allowable mounting error: Parallel misalignment ε	Allowable mounting error: End play γ	Ambient operating temperature range	Chain: Shock resistance	Chain: Weather resistance	Chain: Antiabsorbency
Standard type	0.5°	0.1 mm	±0.8 mm	−5℃ to +60℃	○	×	○
E type	0.7°	0.2 mm		−5℃ to +60℃	○	×	○
H type	1.2°	0.5 mm		−20℃ to +110℃	◎	×	○

Type	Chain: Water resistance (room temperature)	Chain: Steam resistance	Chain: Food Sanitation Act compliance	Chain's chemical resistance: Oils	Chain's chemical resistance: Acids	Chain's chemical resistance: Alkalis	Chain's chemical resistance: Organic solvents
Standard type	○	×	Yes	○	△ to ×	○	○
E type	○	×		○	△ to ×	○	○
H type	○	×		○	○	○	○

Note: Chemical resistance information indicates typical characteristics. Contact Tsubaki when couplings will be used in a chemical atmosphere.
★ Hytrel® is a registered trademark of DuPont.

Product Selection

1. Operating conditions required for selection

(1) Daily operating hours
(2) Load characteristics and type of motor
(3) Transmitted power or torque, and rotation speed
(4) Outer diameters of connected shafts

2. Method of selection

(1) Determine the service factor on the service factor table on the right based on operating conditions.
(2) Multiply the transmitted power [kW] (or torque) by the service factor to calculate the correction transmission power [kW] (or correction torque).
(3) Use the transmission capacity table to select a coupling that satisfies the correction transmission power (or correction torque) at the operating rotation speed.
(4) When the required shaft diameter exceeds the maximum bore diameter of the coupling chosen, use a coupling one size larger.
(5) In the low speed range, the contact pressure may become excessive when using a standard key. In this case, consider whether or not it will be necessary to use a special key or spline bore by calculating key contact pressure.
(6) When choosing a coupling for direct connection to a motor, refer to the Direct Motor Connection Selection Table on the right.

Reference: Relationship between torque, transmitted power and rotation speed

$$T = \frac{60000 \times P}{2\pi \times n} \qquad T = \left\{\frac{974 \times P}{n}\right\}$$

T : Torque [N·m]
P : Transmitted power [kW]
n : Rotation speed [r/min]

Service factor (SF) table

Load type	Motor type		
	Motor turbine	Steam engine/ gasoline engine (4 cylinders or more)	Diesel engine/ gas engine
Low variation, low shock, low starting torque, no reversing	1.0	1.5	2.0
Moderate variation, moderate shock, no reversing (most typical case)	1.5	2.0	2.5
High variation, high shock, reversing with load applied, starting with load applied	2.0	2.5	3.0

Note: The service factors in the table above are general guidelines.
Determine the service factor based on your actual operating conditions.

Recommended coupling models for direct motor connection

Motor output kW			Motor shaft dia.	Model no.		
2P	4P	6P		Standard type	E type	H type
0.2	0.2	—	11	CN310	CNE410	CNH410
0.4	0.4	—	14	CN311	CNE410	CNH410
0.75	0.75	0.4	19	CN315	CNE411	CNH411
1.5 / 2.2	1.5	0.75	24	CN317	CNE414	CNH414
—	2.2	1.5	28	CN415	CNE415	CNH415
3.7	3.7	2.2	28	CN415	CNE415	CNH417
5.5 / 7.5	5.5	3.7	38	CN419	CNE419	—
—	7.5	5.5	38	* CN614	CNE419	—
11 / 15	11	7.5	42	* CN615	—	—
—	15	11	42	* CN616	—	—

Notes 1. Motors are Class E, B and F totally enclosed fan-cooled types of the new standard.
2. Models marked with an asterisk (*) do not support 2-pole motors.
3. This selection table applies to common loads (service factors between 1 and 1.5).

Handling

The standard type and E type chains (made of polyacetal) can be damaged when the joint pin is attached or removed at low ambient temperature. Always attach and remove the joint pin of these types at an ambient temperature of at least 10°C, or first warm the area around the joint using a hairdryer or the like. The H type chains (made of Hytrel®) are more resistant to low temperatures, but should still be attached or removed at an ambient temperature of at least –20°C. For both the E and H types, always use a new joint pin after removing the old joint pin. Do not reuse joint pins.

Mounting

1. Bring the sprocket side faces into contact with each other and correct their angular misalignment. Correct the angle so that tooth side face dimension *T* is equal around the circumference.

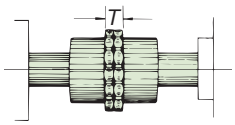

2. Bring the sprocket side faces into contact with each other and correct their parallel misalignment. Place a straight edge on the tooth faces and adjust to eliminate any misalignment of the tooth bottoms.

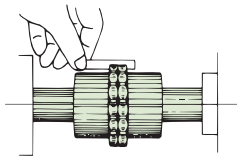

3. Separate the sprockets by a distance equal to dimension *S*, and wrap the chain onto them.

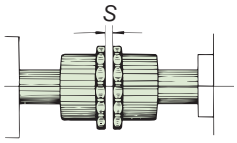

4. Insert the joint pin into the hole in the chain. Insert the pin straight to ensure the load on it is evenly distributed, and connect the chain. If the pin becomes bent during insertion, remove it and use a spare pin to redo the connection. After connecting the chain, fasten the sprockets to the shafts with set bolts or similar fasteners.

Allowable mounting error

Type	Allowable angular misalignment θ	Allowable parallel misalignment ε	Allowable end play (shaft direction displacement) S
Standard type	0.5°	0.1 mm	See table of dimensions
E type	0.7°	0.2 mm	7.1±0.8 mm
H type	1.2°	0.5 mm	

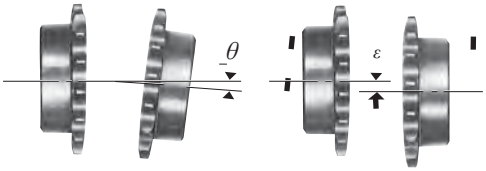

● Ambient operating temperature range
Standard/E types: –5°C to + 60°C
H type: –20°C to + 110°C

● Operating cautions
Procuring and installing a safety cover is recommended to protect against flying fragments if the chain of a Tsubaki coupling breaks.

Removal

1. First check that there is no torque being applied to the coupling.
2. Next, remove one of the chain's pins (any pin), and remove the chain and sprockets.

★ Hytrel® is a registered trademark of DuPont.

Safety Instructions

WARNING Observe the following precautions to avoid risks.

- Always attach protective devices (such as safety covers) on high-speed rotating machinery or vibrating machinery to prevent danger to surroundings caused by components becoming loose, dropping off, or becoming damaged.
- Always use a torque wrench when fasteners must be tightened to a specified torque.
- Do not use any fastening bolts other than the bolts supplied with the product. The fastening bolts provided are a special high-strength type, so contact your place of purchase or a Tsubaki sales office to replace lost bolts.
- When mounting, removing, servicing or inspecting products:
  - ・Wear suitable clothing and protective equipment for the work (such as safety goggles, gloves and safety shoes).
  - ・Always turn off the source power supply beforehand, and take care not to accidently operate switches.
  - ・Perform the procedure as specified in the instruction manual or catalog.
- When servicing or inspecting equipment that is continually subject to a load such as hanging equipment, remove the load before starting work or take steps to prevent the equipment falling. Disconnecting shaft couplings by mistake could lead to equipment falling accidentally.

CAUTION Observe the following precautions to avoid accidents.

- Component wear and damage will vary according to factors such as mounting precision and operation time. Products should be periodically serviced and inspected, applying safety measures to the equipment beforehand.
- When fasteners must be tightened to a specified torque, do not use a torque wrench that is not calibrated for torque adjustment. Major problems may result from use of an improper torque wrench. Do not use a torque wrench with a pipe connected to it as a lever. It will not be possible to obtain the proper tightening torque.
- If fastening bolts become loose due to factors such as the mounting conditions, equipment operating conditions or operating environment, apply safety measures to the equipment if accidents can be foreseen. Check fastener tightness periodically to ensure there is no looseness.
- Be sure to give the instruction manual to the end user.

Warranty:

1. Warranty Period

This warranty is limited to a period of 18 months from the date of shipment from factory, or 12 months from the first time the product is used (determined from the date of completion of the installation of the product on the Buyer's equipment), whichever comes first.

2. Scope of Warranty

In case of damage of the product during the warranty period, the Seller shall repair or replace the defective part at no charge, once the product is returned to the Seller, provided that proper installation, operation, and maintenance of the product were performed according to the instructions provided in the manual. However, this warranty shall be limited to the product delivered to the Buyer by the Seller, and shall not cover any of the following costs:

1) Costs related to the removal and installation of the product from the Buyer's equipment to repair or replace them.
2) Costs to transport the Buyer's equipment to the Buyer's repair shop.
3) Any lost profits as well as other consequential losses to the Buyer associated with any repair or damage of the product.

3. Associated Costs

Investigation and repair costs of the product shall be charged for damages resulting from the following:

1) Improper installation due to failure to follow instructions provided in the manual.
2) Insufficient maintenance or improper operation by the Buyer.
3) Incorrect installation of the product on other equipment.
4) Any modification or alteration of the product by the Buyer.
5) Any repairs performed by anyone other than the Seller or those designated by the Seller.
6) Operation in an environment other than the operating environment specified in the manual.
7) Force majeure, such as a natural disaster, or illegal act by a third party.
8) Secondary damages caused by the Buyer's equipment.
9) Specific requests from the Buyer to integrate or use parts in any manner not described in the manual.
10) The end of the product life cycle as per the service conditions.
11) Any other loss or damage beyond the responsibility of the Seller.

4. Dispatch Service

Separate charges apply for the investigation, adjustments, trial tests, as well as other similar operations of the product by a technician dispatched by the Seller.

Caution The information contained herein is merely intended to assist you through the product selection process. Read the instruction manual before you operate the product.

TSUBAKIMOTO CHAIN CO.

Japan	Tsubakimoto Chain Co.	https://tsubakimoto.com/

Global Group Companies

AMERICAS

United States	U.S. Tsubaki Power Transmission, LLC	https://www.ustsubaki.com/
Brazil	Tsubaki Brasil Equipamentos Industriais Ltda.	https://tsubaki.ind.br/
Canada	Tsubaki of Canada Limited	https://tsubaki.ca/

EUROPE

Netherlands	Tsubakimoto Europe B.V.	https://tsubaki.eu/
France	Kabelschlepp France S.A.R.L.	https://tsubaki-kabelschlepp.com/fr-fr/
Germany	Tsubaki Deutschland GmbH	https://tsubaki.de/
	Tsubaki Kabelschlepp GmbH	https://tsubaki-kabelschlepp.com/de-de/
Italy	Kabelschlepp Italia S.R.L.	https://tsubaki-kabelschlepp.com/it-it/
Spain	Tsubaki Ibérica Power Transmission S.L.	https://tsubaki.es/
United Kingdom	Tsubakimoto UK Ltd.	https://tsubaki.eu/
Slovakia	Kabelschlepp-Systemtechnik, spol. s.r.o.	https://tsubaki-kabelschlepp.com/sk-sk/
Poland	Kabelschlepp Sp. z o.o.	https://kabelschlepp.pl/

INDIAN OCEAN RIM

Singapore	Tsubakimoto Singapore Pte. Ltd.	https://tsubaki.sg/
Australia	Tsubaki Australia Pty. Limited	https://tsubaki.com.au/
India	Tsubaki India Power Transmission Private Limited	https://en.tsubaki.in/
Indonesia	PT. Tsubaki Indonesia Trading	https://tsubaki.id/
Malaysia	Tsubaki Power Transmission (Malaysia) Sdn. Bhd.	https://en.tsubaki.my/
New Zealand	Tsubaki Australia Pty. Limited - New Zealand Branch	https://tsubaki.com.au/
Philippines	Tsubakimoto Philippines Corporation	https://en.tsubaki.ph/
Thailand	Tsubakimoto (Thailand) Co., Ltd.	https://tsubaki.co.th/
Vietnam	Tsubakimoto Vietnam Co., Ltd.	https://tsubaki.net.vn/

EAST ASIA

Republic of Korea	Tsubakimoto Korea Co., Ltd.	https://tsubakimoto-tck.co.kr/
Taiwan	Taiwan Tsubakimoto Trading Co., Ltd.	https://tsubakimoto.tw/

CHINA

China	Tsubakimoto Chain (Shanghai) Co., Ltd.	https://www.tsubaki-sh.cn/

The Tsubaki Eco Link logo is used only on products that satisfy the standards for environmental friendliness set by the Tsubaki Group.

Note: In accordance with the policy of TSUBAKIMOTO CHAIN CO. to constantly improve its products, the specifications in this catalog are subject to change without notice.

Catalog No.985K557-1 ©2023/2 TSUBAKIMOTO CHAIN CO. Printed in Japan (K) 2,000