Innovation in Motion
TSUBAKI

NEW

TSUBAKI
Lambda Chain

Lube-free chain
Patented

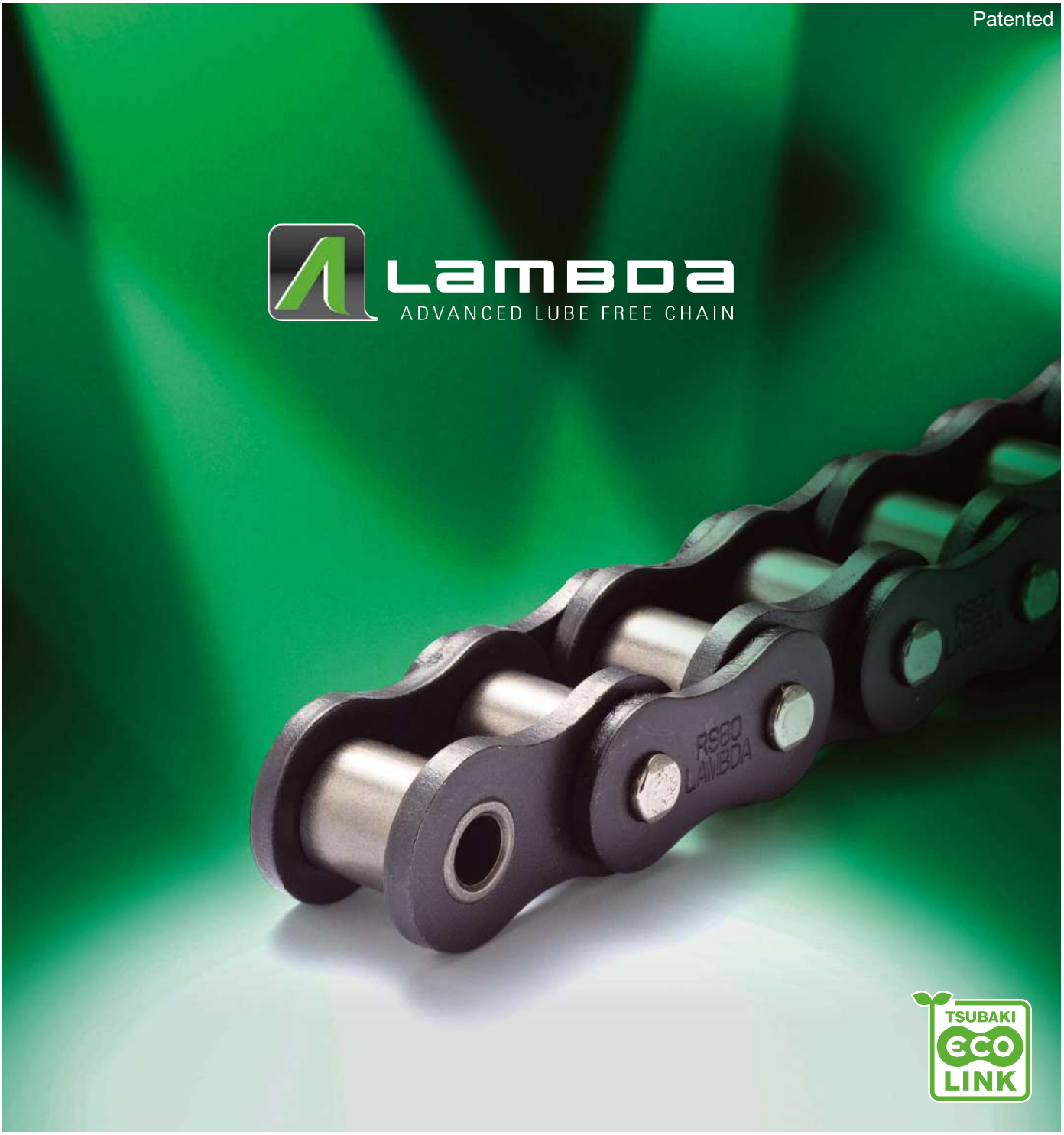

Philosophy

One hundred years of fundamental technology, and the endless pursuit of new value.

Tsubakimoto Chain has worked tirelessly on improving chain performance since our founding in 1917. We were the first Japanese factory to be accredited by Japan Industrial Standards (JIS) for roller chain in 1953. We dubbed that roller chain our first generation chain, and every decade since we have made major leaps in performance up to the 2006 launch of our G7 Series, the world's highest quality roller chain. To celebrate our 100th anniversary, we will be launching our next generation G8 Series, the next evolution of our chain line.

History of RS Roller Chain

1917	Founding	
1953	612 Series	JIS accredited
1964	NA Series	2x kW ratings
1969	53 Series	15% higher tensile strength, global quality
1976	60 Series	7% higher tensile strength, 25% higher kW ratings, world's top quality
1985	70 Series	2x wear life, less initial elongation
1995	80 Series	M-type connecting link provides 25% higher kW ratings, wear increased 30%
2006	G7 Series	33% increased kW ratings, 2x wear life
2009	G7-EX Series	Expanded G7 size range
2016	**G8 Series**	**Centennial model**

As a manufacturing company, Tsubakimoto Chain continues to develop products that adapt to global needs with a century of chain manufacturing know-how and contribute to energy savings, labor savings, and better efficiency around the world.

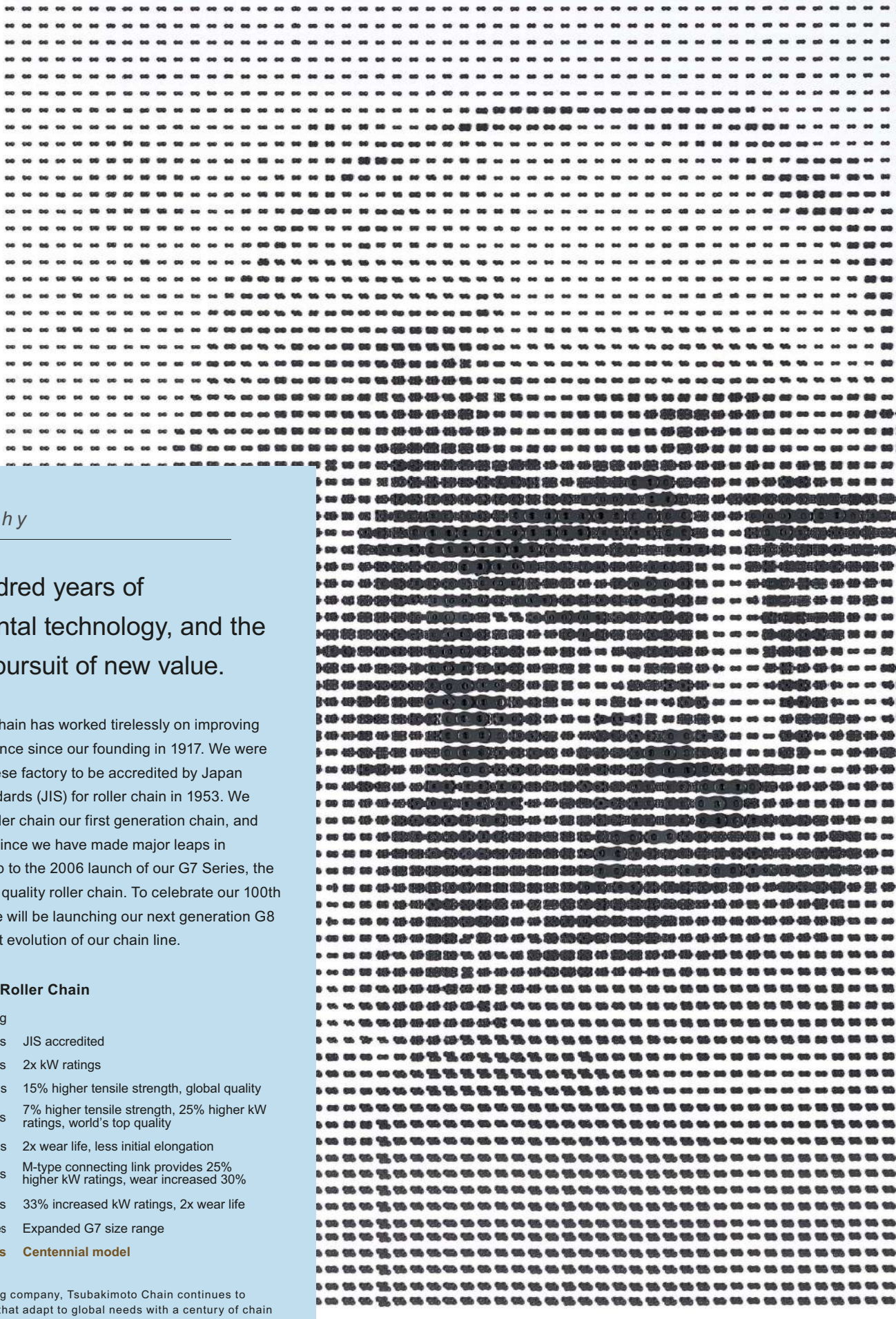

Leonardo da Vinci, founder of the roller chain (1452-1519)
Leonardo da Vinci, the genius of the Renaissance, devised the prototype of a roller chain that today is widely used as a drive chain. His foresight and advanced ideas are revealed in his notebooks, which contain sketches of an object that looks remarkably like a modern chain. The photo shows a portrait of da Vinci, made entirely out of link plates, on display in the main lobby of Tsubakimoto Chain's Kyotanabe Plant.

The Start of a New Era

100th Anniversary Model

TSUBAKI G8 SERIES

The rebirth of the drive chain,
with improved quality and performance.

PRODUCT MAP

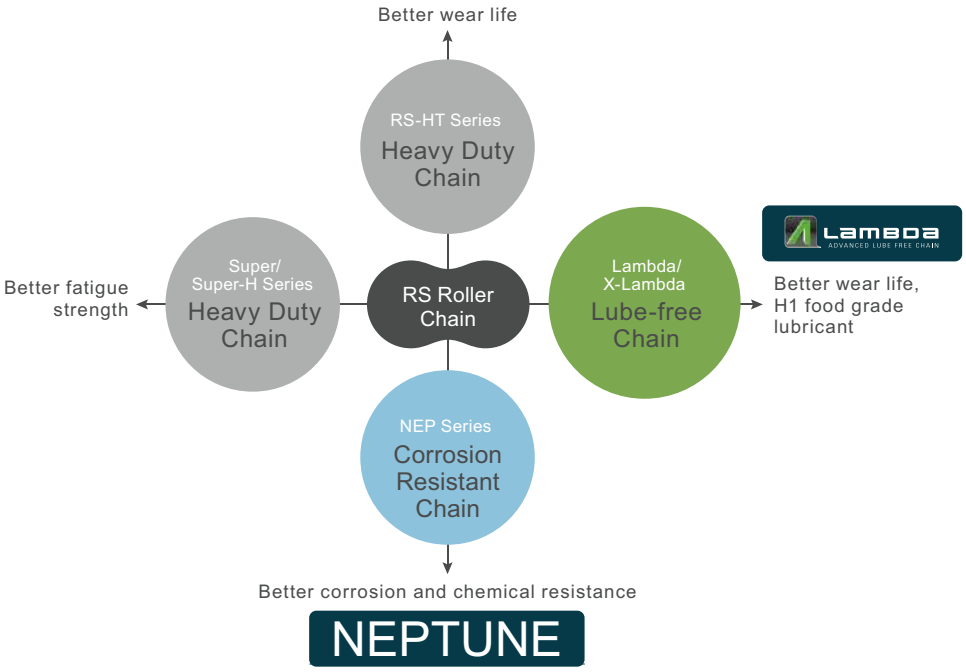

Improved material and lubricant performance gains!

Improved the oil-impregnated sintered bush material and processing methods.*

Improved the oil used in the sintered bushes.

*New BS/DIN Lambda chains were launched in June 2012.

Now with TWICE the wear life.

Basic Lambda Chain construction

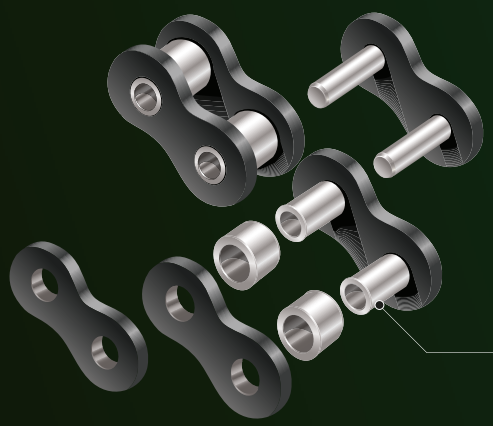

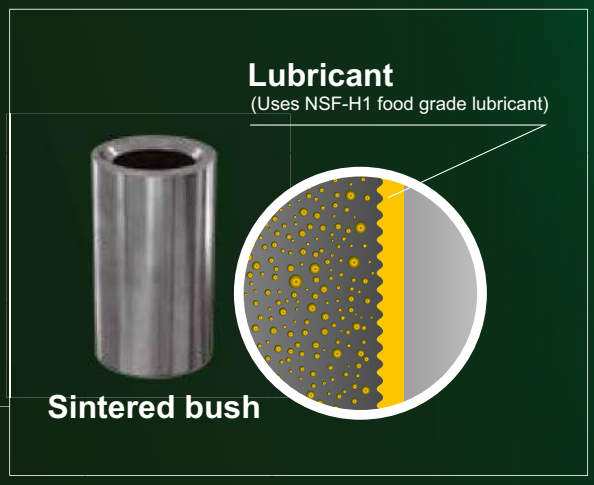

NSH-H1 standards

- The NSF is the only global organization that certifies the safety of lubricants for food equipment.
- NSF-H1 standards stipulate that the lubricant can be used in areas where lubricant may come into accidental contact with food.

Lube-free, long life, and eco-friendly

Oil-impregnated sintered bushes are made in-house for stabilized quality and higher performance.

We began manufacturing our oil-impregnated sintered bushes in-house from 2014. Further, by streamlining production management we were able to stabilize quality and increase chain performance.

Far less maintenance time and costs

The chain doesn't need to be lubricated thanks to its special oil-impregnated bushes – no more dirty equipment from additional lubrication to help you maintain a clean working environment.

Much higher productivity

Benefits of Lambda Chain

- Less maintenance time
- Helps maintain a clean work environment
- Higher equipment reliability
- Much lower chain replacement costs

for major

Notes from the Developer

This is our biggest improvement to Lambda Chain since we first launched it in 1988. With the huge undertaking to move sintered bush production in-house in 2014, we decided to review the sintered bush material and improve part precision to further increase quality. We also introduced totally new production methods, equipment, and inspection equipment to stabilize quality even further to allow us to mass produce the bushes and achieve better wear performance. We threw out conventional ways of thinking regarding lubricant for the sintered bushes and tested and evaluated lubricants that were developed under completely new standards. This allowed us to develop a lubricant that not only conformed to NSF-H1 standards, but also provided even better wear performance.
I have complete confidence in all the improvements we made in everything from design to manufacturing for Tsubaki's new Lambda Chain. I hope that both current and future users will enjoy the long life benefits that the new Lambda Chain will bring them.

Tsubaki Lambda Chain

Tsubaki is a pioneer in the industry, being the first to develop a roller chain that uses special oil impregnated bushes. Since first being introduced in 1988, Lambda Chain has gained an outstanding reputation in a variety of industries and applications. It is capable of meeting a wide range of customer needs for long life in a lubrication-free environment, resulting in reduced overall long-term costs. Lambda Chain uses NSF-H1 lubricant, so it is safe to use on food equipment.

Long life without additional lubrication ..... Special oil-impregnated bushes provide long service life.

Food grade lubricant ..... Sintered bushes use NSF-H1 conforming lubricant*

Compatibility ..... Compatible with standard RS Roller Chain. (*kW ratings will differ.)

Operating temperature range ..... -10°C to 150°C

Sprocket ..... Can use Standard RS sprockets (single strand roller chain only)

Basic Construction

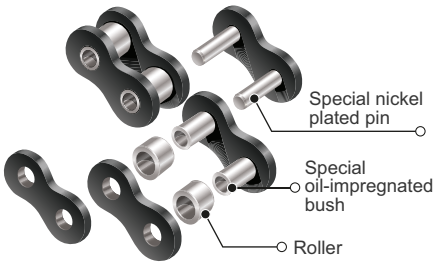

Lambda Chain (standard)
- Inner and outer link plates use a special black oxide coating

Lambda chain (nickel plated)
- Uses a special nickel plating (except on the bushes)

Performance in Ambient Temperatures (-10°C to 60°C)

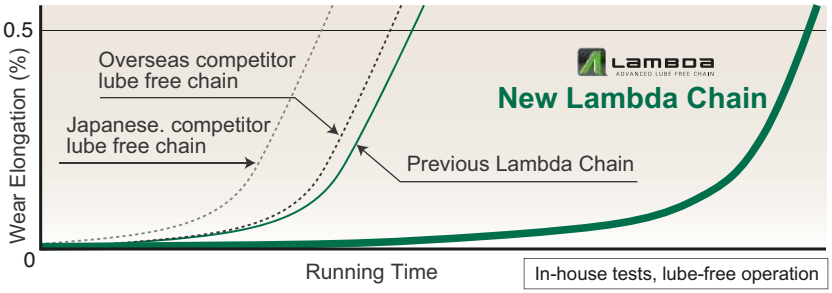

"Lambda" is a registered trademark of U.S. Tsubaki Holdings, Inc. in the United States.

BS Lambda Chain (ISO 606 B Series)

Lambda Chain that conforms to ISO 606 B Series. The dimensions are fully interchangeable with existing BS chains. Specially shaped pins are used on single-strand 08B to 16B to enable easy chain disassembly using a standard chain breaker.

Safety Precautions for Lambda Chain

1. Do not use Lambda Chain if the chain will come in direct contact with food or where coating flakes or wear dust can contaminate food. Also, in non-food applications, appropriately cover the chain or contact a Tsubaki representative about chain selection if using in environments where coating flakes or wear dust present problems. Although nickel is not subject to the Japan Food Sanitation Law or the Industrial Safety and Health Law, plating on sliding parts can peel.
2. Do not use Lambda Chain where there is the possibility of exposure to chemicals, water, or wash down/degreasing operations.
3. Oil may spatter depending on the operating conditions.

*Be aware that non-NSF-H1 grade anti-rust agent or assembly oil from the manufacturing process may be present on Lambda Chain.

Long Life Lambda Chain (X-Lambda Chain) (Patented)

The inclusion of oil-impregnated felt seals between link plates significantly improves the wear resistance of standard Lambda Chain. Ideal for environments where even longer replacement intervals compared to standard Lambda Chain are required.

Ultra long life without additional lubrication ····· The combination of a special oil-impregnated bush and felt seal further extends service life.

Food grade lubricant ····· Sintered bushes use NSF-H1 conforming lubricant.*

Compatibility ····· Compatible with standard Lambda Chains. However, as the overall pin length is longer than with Lambda Chain, check that there will be no interference with the machinery or other equipment.

Operating temperature range ····· -10°C to 60°C. Contact a Tsubaki representative regarding use in temperatures over 60°C.

Sprocket ····· Can use Standard RS sprockets

Basic Construction

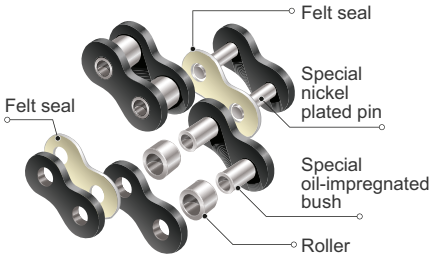

Inner and outer link plates use a special black oxide coating

Performance under -10°C to 60°C Temperatures

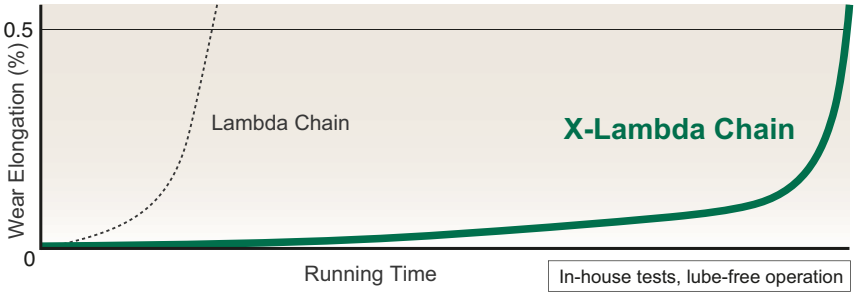

KF Series Lambda Chain (Patented)

Even in high temperature environments (150°C to 230°C), our volatilization and degradation resistant special lubricant brings out maximum wear performance in the chain.

Operating temperature range ····· -10°C to 230°C
Note: Best between 150°C to 230°C

Food grade lubricant ····· Sintered bushes are impregnated with an NSF-H1 grade high temperature lubricant for use on food equipment.*

Do not use in environments over 230°C, as this will lead to a considerable decrease in wear life. Harmful gases may be emitted in temperatures over 280°C.

Wear Life under 150°C Temperatures

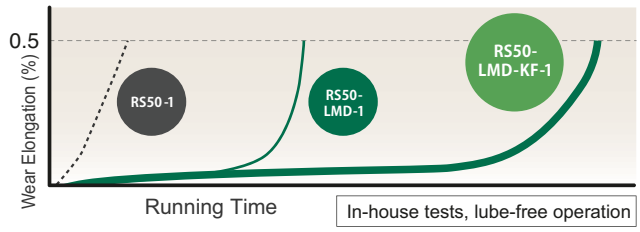

Wear Life under 230°C Temperatures

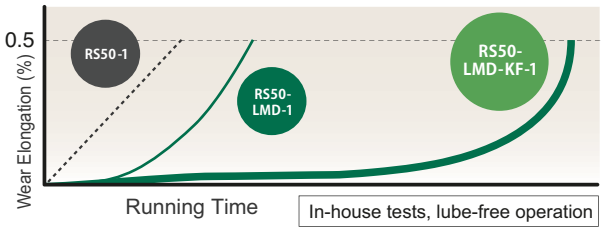

Note: Standard Lambda Chain operating temperature is up to 150°C

Applications

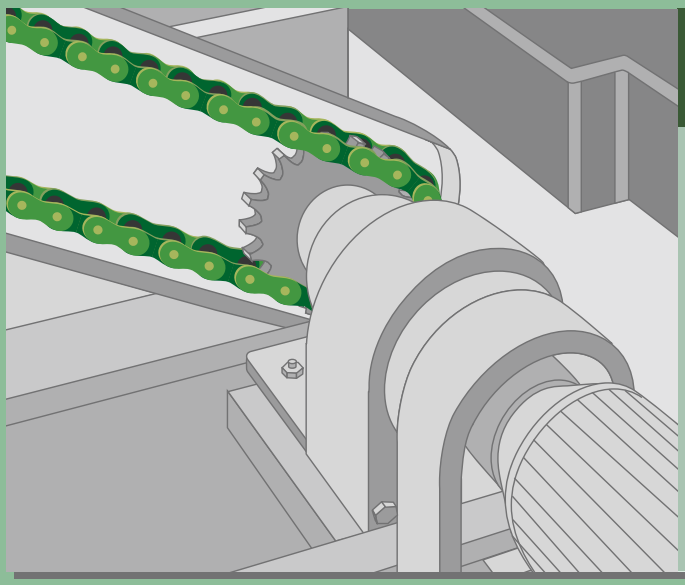

Dusty Environments

The customer uses chain on their raw steel material conveyor. However, when they lubricated in the dusty environment the lubricant would turn sludgy and the chain would suffer poor articulation. So, they used standard chain without lubrication, but the chain suffered from a short service life. They improved the wear life of their chain by switching to lube-free Lambda Chain.

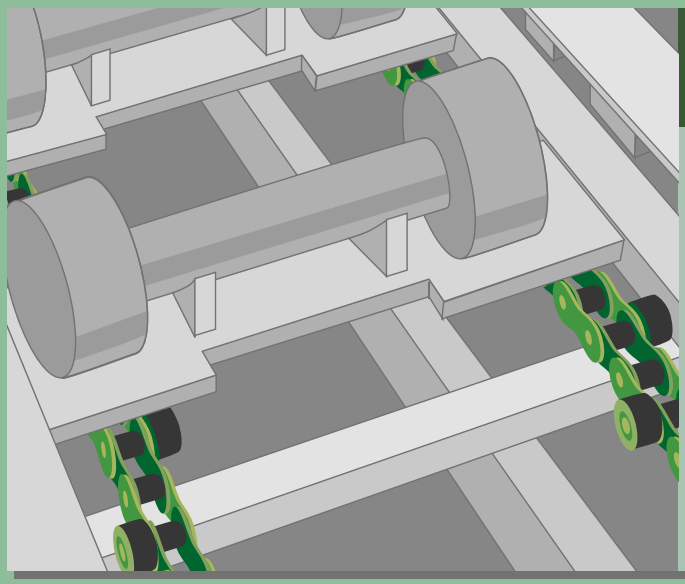

Automotive Parts

The customer uses Double Pitch Lambda Chain with outboard rollers on their automotive parts accumulating conveyor because it reduces the time they need for maintenance.

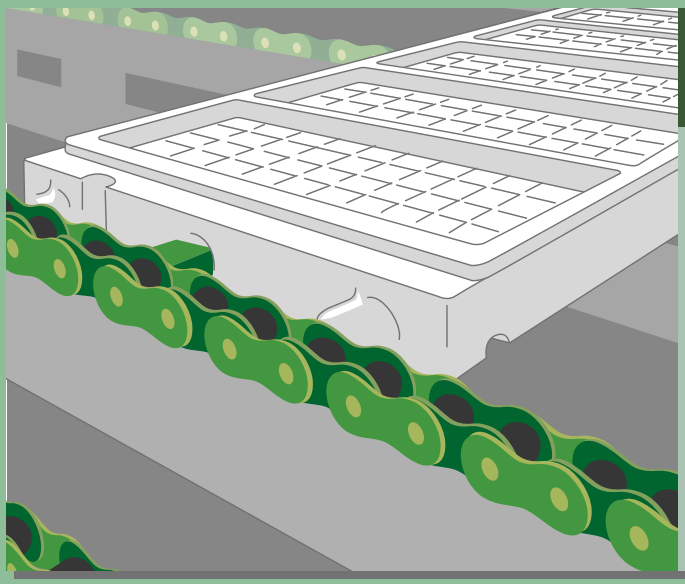

Chocolate

Lambda Chain is used in the chocolate cooling process. Oil from the chocolate can mix with chain lubricant and stick to it, so additional lubrication needs to be avoided. That's why the customer uses Lambda Chain on their chocolate manufacturing lines.

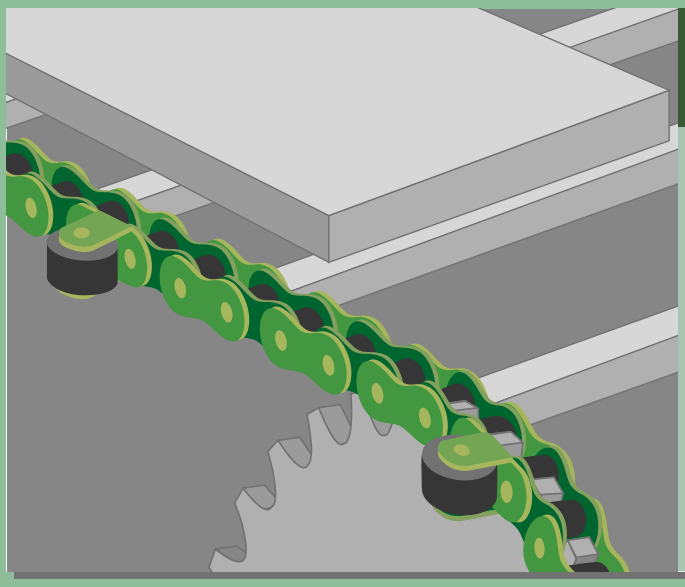

Construction Material Dryer

Outer walls are loaded onto a bar conveyor and passed through a furnace to dry. The customer previously used standard chain but the high temperatures led to premature wear. KF Series Lambda Chain greatly extended the life of their chain.

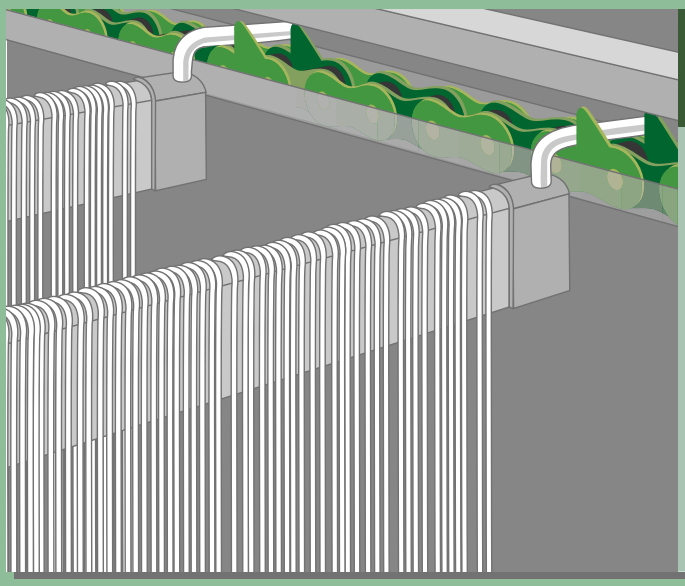

Spaghetti

Spaghetti is hung from a bar and dried on a conveyor. The customer uses Lambda Chain to avoid any lubrication contaminating the product.

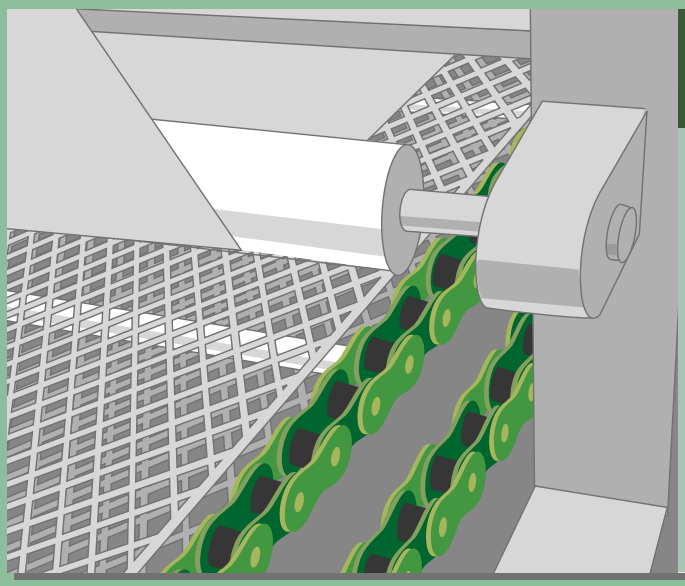

Food Dryer

Bars are attached to extended pins so that the chain can be used as a net conveyor in a food dryer. The customer used standard chain with no additional lubrication to avoid contaminating the food, but the chain would wear prematurely. They switched to Lambda Chain for a much longer wear life.

Tsubaki Lambda Chain

Single Strand

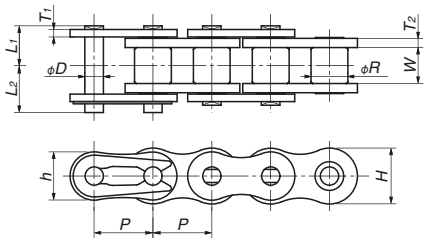

Double Strand

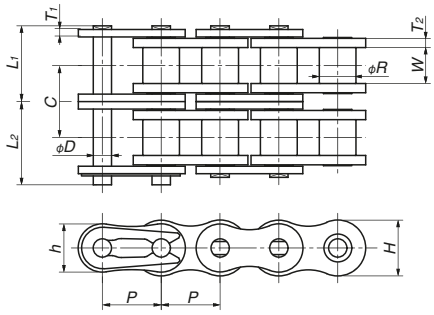

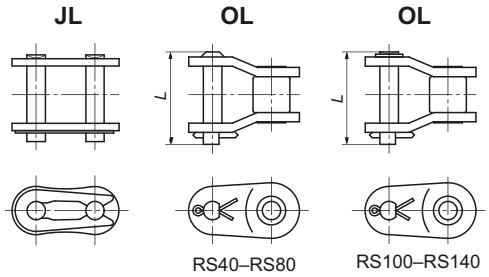

Offset links are not available for double-strand Lambda Chain.
Cotter pins are used in connecting links for RS80 and larger chains. Cotter pins are used for the base chain and connecting links for RS100 and larger chains.

Unit: mm

Tsubaki Chain No.		Pitch P	Roller Dia. R	Width Between Inner Link Plates W	Plate				Pin					Offset Pin Length L
					Thickness T_1	Thickness T_2	Height H	Height h	Dia. D	L_1		L_2		
Single Strand	Double Strand									Single Strand	Double Strand	Single Strand	Double Strand	
RS40-LMD-1	RS40-LMD-2	12.70	7.92	7.55	1.5	2.0	12.0	10.4	3.97	8.75	16.5	10.45	18.1	20.0
RS50-LMD-1	RS50-LMD-2	15.875	10.16	9.26	2.0	2.4	15.0	13.0	5.09	10.75	20.2	12.45	22.0	24.0
RS60-LMD-1	RS60-LMD-2	19.05	11.91	12.28	2.4	3.2	18.1	15.6	5.96	13.70	26.05	15.70	28.05	32.0
RS80-LMD-1	RS80-LMD-2	25.40	15.88	15.48	3.2	4.0	24.1	20.8	7.94	17.15	32.7	20.25	35.9	39.9
RS100-LMD-1	RS100-LMD-2	31.75	19.05	18.70	4.0	4.8	30.1	26.0	9.54	20.65	39.5	23.85	42.5	47.5
RS120-LMD-1	—	38.10	22.23	24.75	4.8	5.6	36.2	31.2	11.11	25.75	—	29.95	—	59.0
RS140-LMD-1	—	44.45	25.40	24.75	5.6	6.4	42.2	36.4	12.71	27.70	—	32.20	—	63.7

Tsubaki Chain No.		Min. Tensile Strength kN {kgf}		Approx. Mass (kg/m)		No. of Links per Unit	Allowable Speed (m/min)	Transverse Pitch C
Single Strand	Double Strand	Single Strand	Double Strand	Single Strand	Double Strand			
RS40-LMD-1	RS40-LMD-2	17.7 {1800}	35.4 {3600}	0.70	1.4	240	150	15.4
RS50-LMD-1	RS50-LMD-2	28.4 {2900}	56.8 {5800}	1.11	2.2	192	135	19.0
RS60-LMD-1	RS60-LMD-2	40.2 {4100}	80.4 {8200}	1.72	3.4	160	120	24.52
RS80-LMD-1	RS80-LMD-2	71.6 {7300}	143 {14600}	2.77	5.5	120	90	31.1
RS100-LMD-1	RS100-LMD-2	107 {10900}	214 {21800}	4.30	8.6	96	80	37.6
RS120-LMD-1	—	148 {15000}	—	6.4	—	80	50	—
RS140-LMD-1	—	193 {19700}	—	8.1	—	68	50	—

Notes: 1. Offset links are not available for double-strand chain. Use an even number of links.
2. All other models are made-to-order.

Operating Temperature Range: –10°C to 150°C

Precautions for Use

- Dust in the bushes accelerates wear. Wet environments can cause the oil in the oil-impregnated bushes to leak out. Chain is coated with less rust-prevention oil than those for RS Roller Chain, which may lead to premature rusting.
- Bush oil can leak out in a vacuum, decreasing wear resistance. Do not use in a vacuum. Contact a Tsubaki representative when considering a chain that can be used in a vacuum.
- Chain life will decrease dramatically if oil in the oil-impregnated bushes is depleted.
- Kilowatt ratings for double-strand Lambda Chain (multi-strand coefficient):
  The multi-strand coefficient of a double-strand chain with the same part dimensions of a single-strand chain is 1.4. To achieve the same multi-strand coefficient of 1.7 as double-strand RS Roller Chain, the outer and inner plates must be thickened and a heavy-duty FCL (press fit) must be used. In any event, special sprockets are required; double-strand RS standard sprockets cannot be used.
- Double-strand Lambda Chain pin length:
  Because the inner plate is thicker than that of RS Roller Chain, the pins are longer by an equal amount (L1, L2). Please check that there will be no interference with equipment.

Chain Numbering

RS40-LMD-1

Chain size — Chain type (LMD: Lambda Drive Chain) — No. of strands

Sample Order

Chain size: RS40-1 Chain series: Lambda Chain
Quantity: 100 links (incl. connecting link)

Chain No.	Quantity	Unit
RS40-LMD-1	99	L
RS40-LMD-1-CL	1	K

*See the Tsubaki Drive Chains & Sprockets catalog for more information on ordering.

Surface-Treated Lambda Chain (NP)

Single Strand

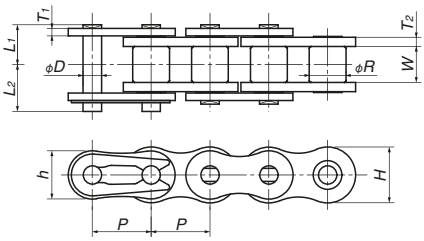

Double Strand

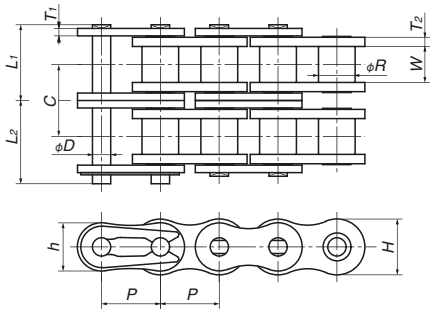

JL **OL** **OL**

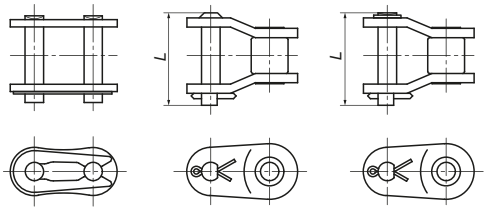

RS40–RS80 RS100–RS140

Offset links are not available for double-strand Lambda Chain.
Cotter pins are used in connecting links for RS80 and larger chains. Cotter pins are used for the base chain and connecting links for RS100 and larger chains.

Unit: mm

Tsubaki Chain No.		Pitch P	Roller Dia. R	Width Between Inner Link Plates W	Plate				Pin					Offset Pin Length L
					Thickness T_1	Thickness T_2	Height H	Height h	Dia. D	L_1		L_2		
Single Strand	Double Strand									Single Strand	Double Strand	Single Strand	Double Strand	
RS40-LMD-NP-1	RS40-LMD-NP-2	12.70	7.92	7.55	1.5	2.0	12.0	10.4	3.97	8.75	16.5	10.45	18.1	20.0
RS50-LMD-NP-1	RS50-LMD-NP-2	15.875	10.16	9.26	2.0	2.4	15.0	13.0	5.09	10.75	20.2	12.45	22.0	24.0
RS60-LMD-NP-1	RS60-LMD-NP-2	19.05	11.91	12.28	2.4	3.2	18.1	15.6	5.96	13.70	26.05	15.70	28.05	32.0
RS80-LMD-NP-1	RS80-LMD-NP-2	25.40	15.88	15.48	3.2	4.0	24.1	20.8	7.94	17.15	32.7	20.25	35.9	39.9
RS100-LMD-NP-1	RS100-LMD-NP-2	31.75	19.05	18.70	4.0	4.8	30.1	26.0	9.54	20.65	39.5	23.85	42.5	47.5
RS120-LMD-NP-1	—	38.10	22.23	24.75	4.8	5.6	36.2	31.2	11.11	25.75	—	29.95	—	59.0
RS140-LMD-NP-1	—	44.45	25.40	24.75	5.6	6.4	42.2	36.4	12.71	27.70	—	32.20	—	63.7

Tsubaki Chain No.		Min. Tensile Strength kN {kgf}		Approx. Mass (kg/m)		No. of Links per Unit	Allowable Speed (m/min)	Transverse Pitch C
Single Strand	Double Strand	Single Strand	Double Strand	Single Strand	Double Strand			
RS40-LMD-NP-1	RS40-LMD-NP-2	19.1 {1950}	38.2 {3900}	0.70	1.4	240	150	15.4
RS50-LMD-NP-1	RS50-LMD-NP-2	31.4 {3200}	62.8 {6400}	1.11	2.2	192	135	19.0
RS60-LMD-NP-1	RS60-LMD-NP-2	44.1 {4500}	88.3 {9000}	1.72	3.4	160	120	24.52
RS80-LMD-NP-1	RS80-LMD-NP-2	78.5 {8000}	157 {16000}	2.77	5.5	120	90	31.1
RS100-LMD-NP-1	RS100-LMD-NP-2	118 {12000}	235 {24000}	4.30	8.6	96	80	37.6
RS120-LMD-NP-1	—	167 {17000}	—	6.4	—	80	50	—
RS140-LMD-NP-1	—	216 {22000}	—	8.1	—	68	50	—

Notes: 1. Offset links are not available for double-strand chain. Use an even number of links.
2. All other models are made-to-order.

Operating Temperature Range: –10°C to 150°C

⚠ Safety Precautions for Nickel-Plated Chain

Do not use nickel-plated Lambda Chain if the chain will come in direct contact with food or where coating flakes or wear dust can contaminate food. Also, in non-food applications, appropriately cover the chain or contact a Tsubaki representative about chain selection if using in environments where coating flakes or wear dust present problems. Though nickel is not subject to the Japan Food Sanitation Law or the Industrial Safety and Health Law, plating on sliding parts can peel.

Chain Numbering

No. **RS40-LMD-NP-1**

- Chain size
- Chain type: LMD: Lambda Drive Chain
- Surface treatment: Nickel-plated: NP
- No. of strands

NEP Series also available (made-to-order product).
Contact a Tsubaki representative for more information.

Sample Order

Chain size: RS40-1 Chain series: NP Series Lambda Chain
Quantity: 100 links (incl. connecting link)

Chain No.	Quantity	Unit
RS40-LMD-NP-1	99	L
RS40-LMD-NP-1-CL	1	K

*See the Tsubaki Drive Chains & Sprockets catalog for more information on ordering.

Long Life Lambda Chain (X-Lambda)

Single Strand **CL**

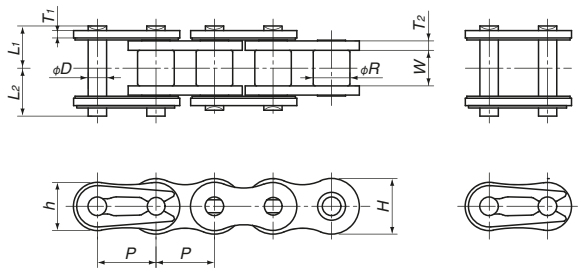

Offset links are not available for X-Lambda Chain.
Cotter pins are used in connecting links for RS80 and larger chains.
Cotter pins are used for the base chain and connecting links for RS100 and larger chains.

Unit: mm

Tsubaki Chain No.	Pitch P	Roller Dia. R	Width Between Inner Link Plates W	Plate				Pin		
				Thickness T_1	Thickness T_2	Height H	Height h	Dia. D	L_1	L_2
RS40-LMDX-1	12.70	7.92	7.55	1.5	2.0	12.0	10.4	3.97	9.4	11.1
RS50-LMDX-1	15.875	10.16	9.26	2.0	2.4	15.0	13.0	5.09	11.4	13.1
RS60-LMDX-1	19.05	11.91	12.28	2.4	3.2	18.1	15.6	5.96	14.8	16.5
RS80-LMDX-1	25.40	15.88	15.48	3.2	4.0	24.1	20.8	7.94	18.3	20.9
RS100-LMDX-1	31.75	19.05	18.70	4.0	4.8	30.1	26.0	9.54	21.8	24.5
RS120-LMDX-1	38.10	22.23	24.75	4.8	5.6	36.2	31.2	11.11	26.7	30.75

Tsubaki Chain No.	Min. Tensile Strength kN {kgf}	Approx. Mass (kg/m)	No. of Links per Unit	Allowable Speed (m/min)
RS40-LMDX-1	17.7 {1800}	0.70	240	150
RS50-LMDX-1	28.4 {2900}	1.11	192	135
RS60-LMDX-1	40.2 {4100}	1.72	160	120
RS80-LMDX-1	71.6 {7300}	2.77	120	90
RS100-LMDX-1	107 {10900}	4.30	96	80
RS120-LMDX-1	148 {15000}	6.40	80	50

Operating Temperature Range: -10°C to 60°C

*Contact a Tsubaki representative regarding use above 60°C.

Delivery: Made-to-order product

Kilowatt Ratings: See pgs. 15 & 16

Precautions for Use:

- Because the inner plate is thicker than that of RS Roller Chain, and due to the felt seals, the pins are longer by an equal amount (L1, L2). Please check that there will be no interference with equipment.
- Offset links are not available for X-Lambda Chain. Use an even number of links.
- Due to oil in the felt seals, more oil adheres to the surface of X-Lambda Chain than standard Lambda Chain.

Connecting

When assembling chain, use connecting links designed for X-Lambda Chain (with felt seals). As shown in Figure 1, insert felt seals between the outer plates and connecting plates, and attach the link. (See pg. 54 on how to cut and connect chain.)

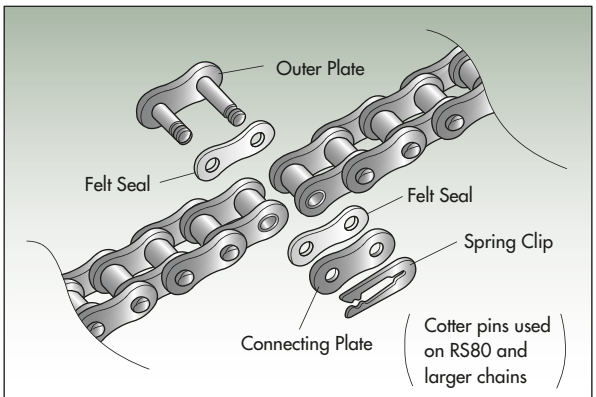

Figure 1: How to assemble a connecting link

Chain Numbering

RS40-LMDX-1

Chain size — X-Lambda Chain — No. of strands

Sample Order

Chain size: RS40-1 Chain series: X-Lambda Chain
Quantity: 100 links (incl. connecting link)

Chain No.	Quantity	Unit
RS40-LMDX-1	99	L
RS40-LMDX-1-CL	1	K

*See the Tsubaki Drive Chains & Sprockets catalog for more information on ordering.

KF Series Lambda Chain

Single Strand

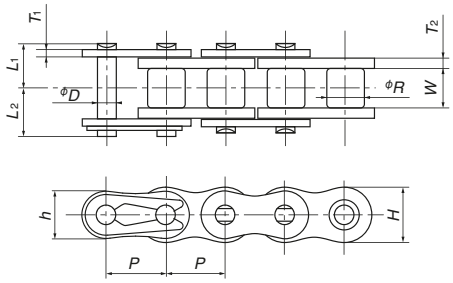

JL

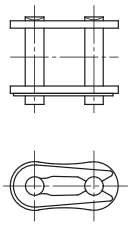

2POL

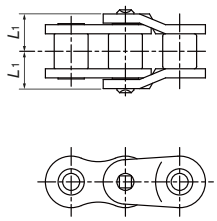

Double Strand

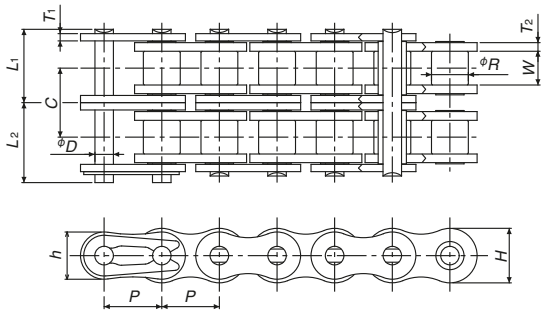

Offset links are not available for double-strand Lambda Chain.
Cotter pins are used in connecting links for RS80 chains.

Unit: mm

Tsubaki Chain No.		Pitch P	Roller Dia. R	Width Between Inner Link Plates W	Plate				Pin				
					Thickness T_1	Thickness T_2	Height H	Height h	Dia. D	L_1		L_2	
Single Strand	Double Strand									Single Strand	Double Strand	Single Strand	Double Strand
RS40-LMD-KF-1	RS40-LMD-KF-2	12.70	7.92	7.55	1.5	2.0	12.0	10.4	3.97	8.75	16.5	10.45	18.1
RS50-LMD-KF-1	RS50-LMD-KF-2	15.875	10.16	9.26	2.0	2.4	15.0	13.0	5.09	10.75	20.2	12.45	22.0
RS60-LMD-KF-1	RS60-LMD-KF-2	19.05	11.91	12.28	2.4	3.2	18.1	15.6	5.96	13.70	26.05	15.70	28.05
RS80-LMD-KF-1	RS80-LMD-KF-2	25.40	15.88	15.48	3.2	4.0	24.1	20.8	7.94	17.15	32.7	20.25	35.9

Tsubaki Chain No.		Min. Tensile Strength kN {kgf}		Approx. Mass (kg/m)		No. of Links per Unit	Allowable Speed (m/min)	Transverse Pitch C
Single Strand	Double Strand	Single Strand	Double Strand	Single Strand	Double Strand			
RS40-LMD-KF-1	RS40-LMD-KF-2	17.7 {1800}	35.3 {3600}	0.70	1.4	240	150	15.4
RS50-LMD-KF-1	RS50-LMD-KF-2	28.4 {2900}	56.9 {5800}	1.11	2.2	192	135	19.0
RS60-LMD-KF-1	RS60-LMD-KF-2	40.2 {4100}	80.4 {8200}	1.72	3.4	160	120	24.52
RS80-LMD-KF-1	RS80-LMD-KF-2	71.6 {7300}	143 {14600}	2.77	5.5	120	90	31.1

Notes: 1. Offset links are not available for double-strand chain. Use an even number of links.
2. Offset links for single-strand chain use special numbering only for double-pitch offset links.

Operating Temperature Range: -10°C to 230°C

However, you may need to factor in temperature when making your selection.

Precautions for Use:

- The multi-strand coefficient of double strand Lambda Chain is 1.4. To select a chain, multiply the kilowatt ratings by 1.4.
- Double-strand Lambda Chain pin length:
  Because the inner plate is thicker than that of RS Roller Chain, and due to the felt seals, the pins are longer by an equal amount (L1, L2). Please check that there will be no interference with equipment.
- Delivery: Made-to-order product

Chain Numbering

RS40-LMD-KF-1

- Chain size
- Type: Lube free drive chain
- KF Series
- No. of strands

Sample Order

Chain size: RS40-1 Chain series: KF Series Lambda Chain
Quantity: 100 links (incl. connecting link)

Chain No.	Quantity	Unit
RS40-LMD-KF-1	99	L
RS40-LMD-KF-1-CL	1	K

*See the Tsubaki Drive Chains & Sprockets catalog for more information on ordering.

⚠ Do not use in environments over 230°C, as this will lead to a considerable decrease in wear life. Harmful gases may be emitted in temperatures over 280°C.

Heavy Duty Lambda Chain
NP Series Surface-Treated Heavy Duty Lambda Chain

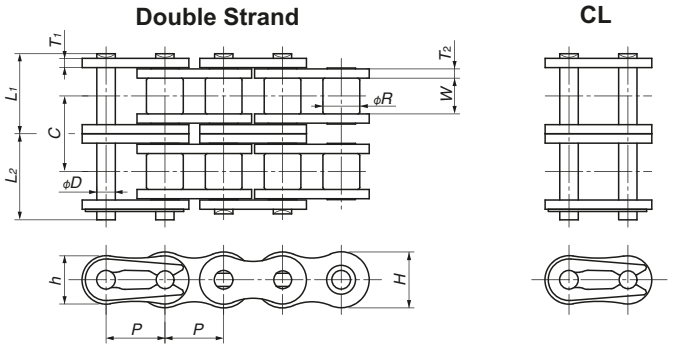

- Cotter pins are used in connecting links for RS80 and larger chains.
- Cotter pins are used for the base chain and connecting links for RS100 and larger chains.

Unit: mm

Tsubaki Chain No.	Pitch P	Roller Dia. R	Width Between Inner Link Plates W	Plate				Pin			Transverse Pitch C
				Thickness T_1	Thickness T_2	Height H	Height h	Dia. D	L_1	L_2	
RS40-LMD-H-2	12.70	7.92	7.55	2.0	2.0	12.0	10.4	3.97	17.5	19.15	16.4
RS50-LMD-H-2	15.875	10.16	9.26	2.4	2.4	15.0	13.0	5.09	20.95	22.65	19.7
RS60-LMD-H-2	19.05	11.91	12.28	3.2	3.2	18.1	15.6	5.96	27.55	29.45	26.1
RS80-LMD-H-2	25.40	15.88	15.48	4.0	4.0	24.1	20.8	7.94	34.6	37.2	32.6
RS100-LMD-H-2	31.75	19.05	18.70	4.8	4.8	30.1	26.0	9.54	41.35	44.05	39.1

Tsubaki Chain No.	Min. Tensile Strength kN {kgf}	Approx. Mass (kg/m)	No. of Links per Unit	Allowable Speed (m/min)
RS40-LMD-H-2	35.4 {3600}	1.57	240	150
RS50-LMD-H-2	56.8 {5800}	2.35	192	135
RS60-LMD-H-2	80.4 {8200}	3.59	160	120
RS80-LMD-H-2	143 {14600}	6.18	120	90
RS100-LMD-H-2	214 {21800}	9.03	96	80

Operating Temperature Range: –10°C to 150°C

Delivery: Made-to-order product.

Sprockets:

The chain's transverse pitch (C) differs from that of RS Roller Chain. Double-strand RS standard sprockets cannot be used.

Kilowatt Ratings (Multi-Strand Coefficient):

- The multi-strand coefficient of Heavy Duty lambda Chain is 1.7. To select a chain, multiply the kilowatt ratings found on pages 15 & 16 by 1.7.
- Use heavy duty FCL (press fit) connecting links. Be aware that using MCL (slip fit) connecting links will result in a decrease in kilowatt ratings.

Offset Links: Offset links are available but kilowatt ratings will drop to 60%.

Pin Length:

Because the outer and inner plates are thicker than those of RS Roller Chain, the pins are longer by an equal amount (L1, L2). Please check that there will be no interference with equipment.

Chain Numbering

RS40-LMD-H-NP-2

Chain size
Lube free drive chain
Heavy duty chain
No. of strands
NP Series

Sample Order

Chain size: RS40-2 Chain series: NP Series Surface-Treated Heavy Duty Lambda Chain
Quantity: 100 links (incl. connecting link)

Chain No.	Quantity	Unit
RS40-LMD-H-NP-2	99	L
RS40-LMD-H-NP-2-CL	1	K

*See the Tsubaki Drive Chains & Sprockets catalog for more information on ordering.

BS Lambda Chain (ISO 606 B Series)

Single Strand

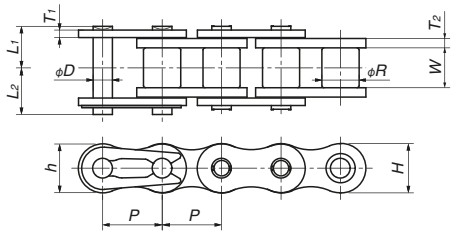

Double Strand

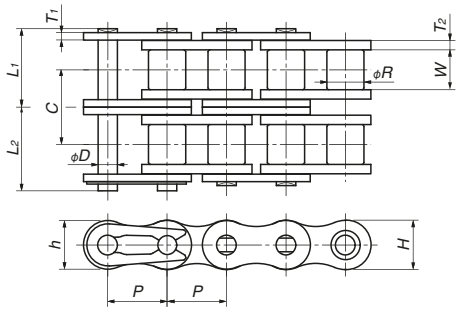

JL **OL**

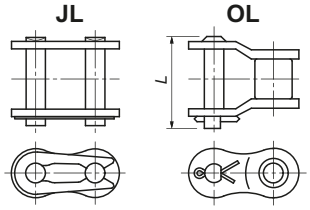

- Specially shaped pins and new riveting are used on single-strand RS08B to RS16B sizes to enable easy chain disassembly using a standard chain breaker.
- Cotter pins are used in connecting links for RS20B and larger chains.
- Double-strand offset links (OL) use cotter pins on both ends.

Unit: mm

Tsubaki Chain No.		JIS No.	Pitch P	Roller Dia. R	Width Between Inner Link Plates W	Plate				Pin				
						Thickness T_1	Thickness T_2	Height H	Height h	Dia. D	L_1		L_2	
Single Strand	Double Strand										Single Strand	Double Strand	Single Strand	Double Strand
RF06B-LM-1	RF06B-LM-2	06B	9.525	6.35	5.72	1.0	1.3	8.2	8.2	3.28	6.1	11.2	7.7	12.8
RS08B-LM-1	RS08B-LM-2	08B	12.70	8.51	7.75	1.6	1.6	11.8	10.4	4.45	8.4	15.3	10.0	16.9
RS10B-LM-1	RS10B-LM-2	10B	15.875	10.16	9.65	1.5	1.5	14.7	13.7	5.08	9.55	17.85	11.25	19.55
RS12B-LM-1	RS12B-LM-2	12B	19.05	12.07	11.68	1.8	1.8	16.1	16.1	5.72	11.1	20.85	13.0	22.75
RS16B-LM-1	RS16B-LM-2	16B	25.40	15.88	17.02	3.2	4.0	21.0	21.0	8.28	17.75	33.55	19.95	35.75
RS20B-LM-1	RS20B-LM-2	20B	31.75	19.05	19.56	3.4	4.4	26.4	26.0	10.19	19.9	38.25	23.1	41.45
RS24B-LM-1	RS24B-LM-2	24B	38.10	25.40	25.40	5.6	6.0	33.4	31.2	14.63	26.65	50.8	31.85	56.0

Tsubaki Chain No.		Offset Pin Length L		Min. Tensile Strength kN {kgf}		Approx. Mass (kg/m)		No. of Links per Unit	Allowable Speed (m/min)	Transverse Pitch C
Single Strand	Double Strand	Single Strand	Double Strand	Single Strand	Double Strand	Single Strand	Double Strand			
RF06B-LM-1	RF06B-LM-2	15.1	25.9	8.90 {910}	16.9 {1720}	0.39	0.75	320	160	10.24
RS08B-LM-1	RS08B-LM-2	18.6	34.5	17.8 {1820}	31.1 {3170}	0.70	1.35	240	150	13.92
RS10B-LM-1	RS10B-LM-2	20.8	39.4	22.2 {2260}	44.5 {4540}	0.95	1.85	192	135	16.59
RS12B-LM-1	RS12B-LM-2	24.4	45.9	28.9 {2950}	57.8 {5890}	1.25	2.50	160	120	19.46
RS16B-LM-1	RS16B-LM-2	41.1	75.2	60.0 {6120}	106 {10800}	2.70	5.40	120	90	31.88
RS20B-LM-1	RS20B-LM-2	46.6	84.6	95.0 {9690}	170 {17300}	3.85	7.65	96	80	36.45
RS24B-LM-1	RS24B-LM-2	61.7	112.8	160 {16300}	280 {28600}	7.45	14.65	80	50	48.36

Notes: 1. RF06B plate is flat.( )
2. Double-strand RF06B and RS08B chains have one inner plate.
3. All other models are made-to-order.

Operating Temperature Range: –10°C to 150°C

Sprockets: BS Roller Chain sprockets (conforming to ISO B Series standards) must be used.

Pin Shape:

Single-strand chains in sizes RS08B through RS16B use easy to disassemble pins (with center sink riveting). All other sizes, including multi-strand chains, use double stake riveting.

Easy Disassembly and Connection:

Newly developed, specially shaped pins and new riveting are used on single-strand RS08B to RS16B sizes to enable easy chain disassembly using a standard chain breaker.

Chain Selection: Please contact a Tsubaki representative.

Compatibility:

- When replacing an old chain, always replace the entire chain.
- New chain cannot be connected to old chain. Old connecting parts (connecting links, offset links, etc.) cannot be used with new chain.

Chain Numbering

RS08B-LM-1

Chain size
No. of strands
Lube free drive chain (BS)

Sample Order

Chain size: RS08B-1 Chain series: BS Series Lambda Chain
Quantity: 100 links (incl. connecting link)

Chain No.	Quantity	Unit
RS08B-LM-1	99	L
RS08B-LM-1-CL	1	K

*See the Tsubaki Drive Chains & Sprockets catalog for more information on ordering.

Kilowatt Rating Tables (Lambda Chain, Surface-Treated Lambda Chain, X-Lambda Chain)

RS40-LMD-1 Kilowatt Ratings (Single-Strand Chain)

Small Sprocket Teeth No.	Small Sprocket Max. rpm											
	10	25	50	100	200	300	400	500	700	900	1000	1200
9	0.05	0.11	0.21	0.39	0.72	1.04	1.35	1.64	2.23	2.79	3.07	3.62
10	0.05	0.12	0.23	0.43	0.81	1.16	1.51	1.84	2.49	3.13	3.44	
11	0.06	0.14	0.26	0.48	0.90	1.29	1.67	2.04	2.76	3.47	3.81	
12	0.07	0.15	0.28	0.53	0.98	1.42	1.84	2.24	3.04	3.81		
13	0.07	0.17	0.31	0.57	1.07	1.54	2.00	2.45	3.31	4.15		
14	0.08	0.18	0.33	0.62	1.16	1.67	2.17	2.65	3.59			
15	0.08	0.19	0.36	0.67	1.25	1.80	2.34	2.86	3.87			
16	0.09	0.21	0.39	0.72	1.34	1.93	2.50	3.06	4.14			
17	0.10	0.22	0.41	0.77	1.43	2.06	2.67	3.27				
18	0.10	0.23	0.44	0.82	1.52	2.20	2.84	3.48				
19	0.11	0.25	0.46	0.87	1.62	2.33	3.02	3.69				
20	0.12	0.26	0.49	0.92	1.71	2.46	3.19	3.90				
21	0.12	0.28	0.52	0.96	1.80	2.59	3.36	4.11				
22	0.13	0.29	0.54	1.01	1.89	2.73	3.53	4.32				
23	0.13	0.31	0.57	1.06	1.99	2.86	3.71	4.53				
24	0.14	0.32	0.60	1.11	2.08	3.00	3.88					
25	0.15	0.33	0.62	1.16	2.17	3.13	4.06					
26	0.15	0.35	0.65	1.21	2.27	3.27	4.23					
28	0.17	0.38	0.71	1.32	2.46	3.54	4.58					
30	0.18	0.41	0.76	1.42	2.65	3.81						
32	0.19	0.44	0.81	1.52	2.84	4.09						
35	0.21	0.48	0.90	1.67	3.13	4.50						
40	0.24	0.56	1.04	1.93	3.61							
45	0.28	0.63	1.18	2.20	4.10							

RS50-LMD-1 Kilowatt Ratings (Single-Strand Chain)

Small Sprocket Teeth No.	Small Sprocket Max. rpm											
	10	25	50	100	200	300	400	500	600	700	800	900
9	0.10	0.23	0.43	0.80	1.49	2.15	2.78	3.40	4.01	4.60	5.19	5.77
10	0.11	0.26	0.48	0.90	1.67	2.41	3.12	3.81	4.49	5.16	5.82	
11	0.12	0.28	0.53	0.99	1.85	2.67	3.46	4.22	4.98	5.72		
12	0.14	0.31	0.58	1.09	2.03	2.93	3.80	4.64	5.47	6.28		
13	0.15	0.34	0.64	1.19	2.22	3.19	4.14	5.06	5.96			
14	0.16	0.37	0.69	1.29	2.40	3.46	4.48	5.48	6.46			
15	0.17	0.40	0.74	1.39	2.59	3.73	4.83	5.91				
16	0.19	0.43	0.80	1.49	2.78	4.00	5.18	6.33				
17	0.20	0.46	0.85	1.59	2.96	4.27	5.53	6.76				
18	0.21	0.49	0.91	1.69	3.15	4.54	5.88					
19	0.23	0.51	0.96	1.79	3.34	4.81	6.24					
20	0.24	0.54	1.01	1.89	3.53	5.09	6.59					
21	0.25	0.57	1.07	2.00	3.72	5.36	6.95					
22	0.26	0.60	1.12	2.10	3.91	5.64						
23	0.28	0.63	1.18	2.20	4.11	5.92						
24	0.29	0.66	1.24	2.30	4.30	6.19						
25	0.30	0.69	1.29	2.41	4.49	6.47						
26	0.32	0.72	1.35	2.51	4.69	6.75						
28	0.34	0.78	1.46	2.72	5.08	7.32						
30	0.37	0.84	1.57	2.93	5.47							
32	0.40	0.90	1.69	3.14	5.87							
35	0.44	0.99	1.86	3.46	6.46							
40	0.50	1.15	2.14	4.00	7.47							
45	0.57	1.30	2.44	4.54								

RS60-LMD-1 Kilowatt Ratings (Single-Strand Chain)

Small Sprocket Teeth No.	Small Sprocket Max. rpm											
	10	25	50	100	150	200	250	300	400	500	600	700
9	0.18	0.41	0.76	1.41	2.03	2.63	3.22	3.79	4.92	6.01	7.08	8.14
10	0.20	0.45	0.85	1.58	2.28	2.95	3.61	4.25	5.51	6.73	7.94	
11	0.22	0.50	0.94	1.75	2.53	3.27	4.00	4.71	6.11	7.46		
12	0.24	0.55	1.03	1.93	2.77	3.59	4.39	5.18	6.71	8.20		
13	0.26	0.60	1.13	2.10	3.03	3.92	4.79	5.65	7.31			
14	0.29	0.65	1.22	2.28	3.28	4.25	5.19	6.12	7.92			
15	0.31	0.70	1.31	2.45	3.53	4.57	5.59	6.59	8.54			
16	0.33	0.75	1.41	2.63	3.79	4.90	6.00	7.06				
17	0.35	0.81	1.50	2.81	4.04	5.24	6.40	7.54				
18	0.38	0.86	1.60	2.98	4.30	5.57	6.81	8.02				
19	0.40	0.91	1.70	3.16	4.56	5.90	7.22	8.51				
20	0.42	0.96	1.79	3.34	4.82	6.24	7.63	8.99				
21	0.44	1.01	1.89	3.53	5.08	6.58	8.04					
22	0.47	1.06	1.99	3.71	5.34	6.92	8.46					
23	0.49	1.12	2.08	3.89	5.60	7.26	8.87					
24	0.51	1.17	2.18	4.07	5.87	7.60	9.29					
25	0.54	1.22	2.28	4.26	6.13	7.94	9.71					
26	0.56	1.28	2.38	4.44	6.40	8.29						
28	0.61	1.38	2.58	4.81	6.93	8.98						
30	0.65	1.49	2.78	5.18	7.46	9.67						
32	0.70	1.60	2.98	5.56	8.00							
35	0.77	1.76	3.28	6.12	8.82							
40	0.89	2.03	3.79	7.07	10.2							
45	1.01	2.31	4.30	8.03								

RS80-LMD-1 Kilowatt Ratings (Single-Strand Chain)

Small Sprocket Teeth No.	Small Sprocket Max. rpm										
	10	25	50	75	100	125	150	200	250	300	350
9	0.40	0.91	1.69	2.44	3.16	3.86	4.55	5.90	7.21	8.50	9.76
10	0.45	1.02	1.90	2.73	3.54	4.33	5.10	6.61	8.08	9.52	10.9
11	0.49	1.13	2.10	3.03	3.93	4.80	5.65	7.33	8.96	10.6	
12	0.54	1.24	2.31	3.33	4.31	5.27	6.21	8.05	9.84		
13	0.59	1.35	2.52	3.63	4.70	5.75	6.77	8.77	10.7		
14	0.64	1.46	2.73	3.93	5.09	6.23	7.34	9.51	11.6		
15	0.69	1.58	2.94	4.24	5.49	6.71	7.90	10.2			
16	0.74	1.69	3.15	4.54	5.88	7.19	8.48	11.0			
17	0.79	1.80	3.37	4.85	6.28	7.68	9.05	11.7			
18	0.84	1.92	3.58	5.16	6.68	8.17	9.63				
19	0.89	2.03	3.80	5.47	7.08	8.66	10.2				
20	0.94	2.15	4.01	5.78	7.49	9.15	10.8				
21	0.99	2.27	4.23	6.09	7.89	9.65	11.4				
22	1.04	2.38	4.45	6.41	8.30	10.1	12.0				
23	1.10	2.50	4.67	6.72	8.71	10.6	12.5				
24	1.15	2.62	4.89	7.04	9.12	11.1					
25	1.20	2.74	5.11	7.35	9.53	11.6					
26	1.25	2.85	5.33	7.67	9.94	12.2					
28	1.36	3.09	5.77	8.31	10.8	13.2					
30	1.46	3.33	6.22	8.96	11.6						
32	1.57	3.57	6.67	9.60	12.4						
35	1.73	3.94	7.34	10.6	13.7						
40	1.99	4.55	8.48	12.2							
45	2.26	5.16	9.63	13.9							

Notes:
1. Kilowatt ratings when using a one-pitch offset link (OL) are 80% that of the above values.
2. Multiply the above by a multi-strand coefficient of 1.4 for double-strand Lambda Chain.
3. Surface Treated Lambda Chain and X-Lambda Chain both use the kilowatt ratings tables shown here.
4. Kilowatt ratings for RS Roller Chain differ from the above.
5. Select KF Series Lambda Chain based on kilowatt ratings with ambient temperature selection coefficients factored in.

Kilowatt Rating Tables (Lambda Chain, Surface-Treated Lambda Chain, X-Lambda Chain)

RS100-LMD-1 Kilowatt Ratings (Single-Strand Chain)

Small Sprocket Teeth No.	Small Sprocket Max. rpm											
	10	25	50	75	100	125	150	175	200	225	250	275
9	0.66	1.51	2.82	4.07	5.27	6.44	7.59	8.72	9.83	10.9	12.0	13.1
10	0.74	1.70	3.16	4.56	5.90	7.22	8.50	9.77	11.0	12.2	13.5	
11	0.82	1.88	3.51	5.05	6.54	8.00	9.42	10.8	12.2	13.6		
12	0.90	2.06	3.85	5.55	7.19	8.79	10.4	11.9	13.4			
13	0.99	2.25	4.20	6.05	7.84	9.58	11.3	13.0				
14	1.07	2.44	4.55	6.55	8.49	10.4	12.2	14.0				
15	1.15	2.63	4.90	7.06	9.15	11.2	13.2					
16	1.23	2.82	5.26	7.57	9.81	12.0	14.1					
17	1.32	3.01	5.61	8.08	10.5	12.8						
18	1.40	3.20	5.97	8.60	11.1	13.6						
19	1.49	3.39	6.33	9.11	11.8	14.4						
20	1.57	3.58	6.69	9.63	12.5	15.3						
21	1.66	3.78	7.05	10.2	13.2							
22	1.74	3.97	7.41	10.7	13.8							
23	1.83	4.17	7.78	11.2	14.5							
24	1.91	4.36	8.14	11.7	15.2							
25	2.00	4.56	8.51	12.3	15.9							
26	2.09	4.76	8.88	12.8								
28	2.26	5.15	9.62	13.9								
30	2.43	5.55	10.4	14.9								
32	2.61	5.95	11.1	16.0								
35	2.88	6.56	12.2									
40	3.32	7.58	14.1									
45	3.77	8.60	16.1									

RS120-LMD-1 Kilowatt Ratings (Single-Strand Chain)

Small Sprocket Teeth No.	Small Sprocket Max. rpm											
	5	10	15	20	25	30	40	50	60	80	100	125
9	0.65	1.22	1.75	2.27	2.77	3.27	4.23	5.17	6.09	7.90	9.65	11.8
10	0.73	1.36	1.96	2.54	3.11	3.66	4.74	5.80	6.83	8.85	10.8	13.2
11	0.81	1.51	2.17	2.82	3.44	4.06	5.25	6.42	7.57	9.81	12.0	
12	0.89	1.66	2.39	3.09	3.78	4.46	5.77	7.06	8.31	10.8	13.2	
13	0.97	1.81	2.60	3.37	4.12	4.86	6.29	7.69	9.07	11.7	14.4	
14	1.05	1.96	2.82	3.65	4.47	5.26	6.82	8.33	9.82	12.7		
15	1.13	2.11	3.04	3.94	4.81	5.67	7.35	8.98	10.6	13.7		
16	1.21	2.26	3.26	4.22	5.16	6.08	7.88	9.63	11.3	14.7		
17	1.29	2.41	3.48	4.51	5.51	6.49	8.41	10.3	12.1			
18	1.38	2.57	3.70	4.79	5.86	6.90	8.94	10.9	12.9			
19	1.46	2.72	3.92	5.08	6.21	7.32	9.48	11.6	13.7			
20	1.54	2.88	4.15	5.37	6.57	7.74	10.0	12.3	14.4			
21	1.63	3.03	4.37	5.66	6.92	8.15	10.6	12.9	15.2			
22	1.71	3.19	4.60	5.95	7.28	8.58	11.1	13.6				
23	1.79	3.35	4.82	6.25	7.64	9.00	11.7	14.2				
24	1.88	3.50	5.05	6.54	7.99	9.42	12.2	14.9				
25	1.96	3.66	5.28	6.83	8.35	9.84	12.8	15.6				
26	2.05	3.82	5.50	7.13	8.72	10.3	13.3	16.3				
28	2.22	4.14	5.96	7.72	9.44	11.1	14.4					
30	2.39	4.46	6.42	8.32	10.2	12.0	15.5					
32	2.56	4.78	6.89	8.92	10.9	12.9	16.7					
35	2.82	5.27	7.59	9.83	12.0	14.2						
40	3.26	6.08	8.76	11.4	13.9	16.4						
45	3.70	6.91	9.95	12.9	15.8							

RS140-LMD-1 Kilowatt Ratings (Single-Strand Chain)

Small Sprocket Teeth No.	Small Sprocket Max. rpm											
	5	10	15	20	25	30	40	50	60	80	100	125
9	1.02	1.90	2.74	3.55	4.34	5.12	6.63	8.10	9.55	12.4	15.1	18.5
10	1.14	2.13	3.07	3.98	4.87	5.73	7.43	9.08	10.7	13.9	16.9	
11	1.27	2.36	3.41	4.41	5.39	6.35	8.23	10.1	11.9	15.4	18.8	
12	1.39	2.60	3.74	4.85	5.92	6.98	9.04	11.1	13.0	16.9		
13	1.52	2.83	4.08	5.28	6.46	7.61	9.86	12.1	14.2	18.4		
14	1.64	3.07	4.42	5.72	7.00	8.25	10.7	13.1	15.4	19.9		
15	1.77	3.30	4.76	6.17	7.54	8.88	11.5	14.1	16.6			
16	1.90	3.54	5.10	6.61	8.08	9.52	12.3	15.1	17.8			
17	2.03	3.78	5.45	7.06	8.63	10.2	13.2	16.1	19.0			
18	2.16	4.02	5.80	7.51	9.18	10.8	14.0	17.1	20.2			
19	2.29	4.27	6.14	7.96	9.73	11.5	14.9	18.2				
20	2.42	4.51	6.49	8.41	10.3	12.1	15.7	19.2				
21	2.55	4.75	6.85	8.87	10.8	12.8	16.6	20.2				
22	2.68	5.00	7.20	9.33	11.4	13.4	17.4	21.3				
23	2.81	5.24	7.55	9.78	12.0	14.1	18.3					
24	2.94	5.49	7.91	10.2	12.5	14.8	19.1					
25	3.07	5.74	8.26	10.7	13.1	15.4	20.0					
26	3.21	5.99	8.62	11.2	13.7	16.1	20.8					
28	3.48	6.48	9.34	12.1	14.8	17.4	22.6					
30	3.74	6.99	10.1	13.0	15.9	18.8						
32	4.01	7.49	10.8	14.0	17.1	20.1						
35	4.42	8.25	11.9	15.4	18.8	22.2						
40	5.11	9.53	13.7	17.8	21.7							

Notes: 1. Kilowatt ratings when using a one-pitch offset link (OL) are 80% that of the above values.
2. Multiply the above by a multi-strand coefficient of 1.4 for double-strand Lambda Chain.
3. Surface Treated Lambda Chain and X-Lambda Chain both use the kilowatt ratings tables shown here.
4. Kilowatt ratings for RS Roller Chain differ from above.
5. Select Lambda Chain KF Series based on kilowatt ratings with ambient temperature selection coefficients factored in.

Curved Lambda Chain

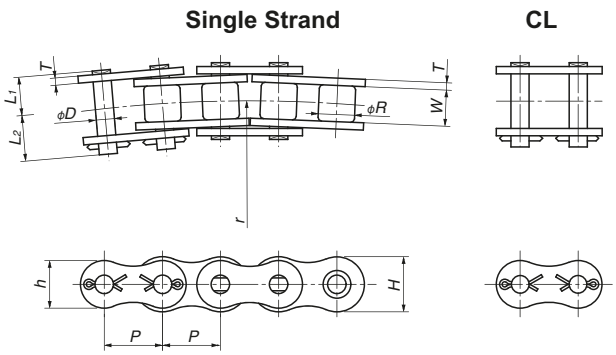

Unit: mm

Tsubaki Chain No.	Pitch P	Roller Dia. R	Width Between Inner Link Plates W	Plate			Pin			
				Thickness T	Height H	Height h	Dia. D	$L_1 + L_2$	L_1	L_2
RS40-LMC-CU-1	12.70	7.92	7.95	1.5	12.0	10.4	3.59	18.2	8.45	9.75
RS50-LMC-CU-1	15.875	10.16	9.53	2.0	15.0	13.0	4.45	22.0	10.3	11.7
RS60-LMC-CU-1	19.05	11.91	12.70	2.4	18.1	15.6	5.35	27.5	12.95	14.55

Tsubaki Chain No.	Min. Tensile Strength kN {kgf}	Approx. Mass (kg/m)	No. of Links per Unit	Min. Lateral Bending Radius r	Max. Allowable Load kN {kgf}
RS40-LMC-CU-1	12.4 {1260}	0.61	240	400	1.86 {190}
RS50-LMC-CU-1	19.2 {1960}	1.01	192	500	2.84 {290}
RS60-LMC-CU-1	27.9 {2840}	1.40	160	600	4.02 {410}

Operating Temperature Range: –10°C to 150°C

Delivery: Made-to-order product.

Sprockets: RS standard sprockets can be used.

Attachment Chain also available.

See page 57 for installation.

Chain Numbering

RS40-LMC-CU-1

- Chain size
- Lube free drive chain
- Curved chain
- No. of strands

Sample Order

Chain size: RS40-1 Chain series: Curved Lambda Chain
Quantity: 100 links (incl. connecting link)

Chain No.	Quantity	Unit
RS40-LMC-CU-1	99	L
RS40-LMC-CU-1-CL	1	K

*See the Tsubaki Drive Chains & Sprockets catalog for more information on ordering.

Lube Free Conveyor Chain

Lambda Double Pitch Chain
Surface-Treated Lambda Double Pitch Chain
KF Series Lambda Double Pitch Chain 19

Long Life Lambda Double Pitch Chain 21

Lambda RS® Attachment Chain
Surface-Treated Lambda RS® Attachment Chain 23

Long Life Lambda RS Attachment Chain 25

BS Lambda Attachment Chain 27

Lambda RF Roller Chain 29

Lambda Hollow Pin Chain 30

Lambda Plastic Roller Chain 31

Lambda Double Plus Chain/Sprockets for Double Plus Chain 32

Lambda Double Pitch Chain with Outboard Rollers 33

Lambda RS® Chain with Outboard Rollers
Sprockets for RS Chain with Outboard Rollers 35

Lambda Double Pitch Chain with Top Rollers
Sprockets for Lambda Double Pitch Chain with Top Rollers 37

Lambda RS® Chain with Top Rollers 38

Various Special Attachments for Lambda Chain 39

Lube Free Top Chain

Lambda Snap Cover Chain (for linear conveyance) 41

Lambda TN Snap Top Chain (for linear conveyance) 43

Lambda TS/TSA Stainless Steel Top Chain (for linear conveyance) 45

Lambda Double Pitch Chain
Surface-Treated Lambda Double Pitch Chain
KF Series Lambda Double Pitch Chain

Base Chain

S Roller | **Offset Link** | **R Roller** | **Offset Link**

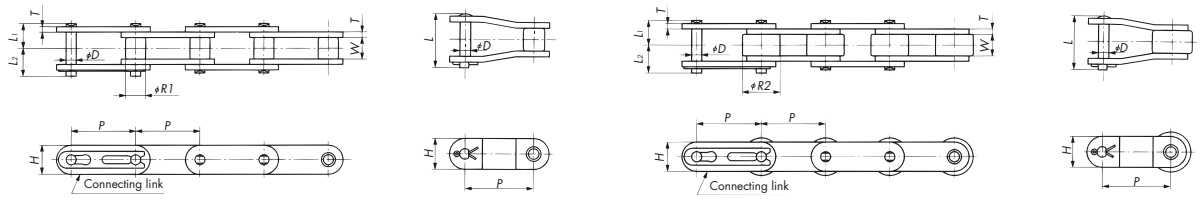

• Connecting links: RF2040-LMC to RF2060-LMC use spring clips. RF2080-LMC and RF2100-LMC as well as chains with GNK1 attachments (all sizes) use cotter pins. Base chain pins are riveted.

Attachments

A1 Attachment | **A2 Attachment** | **K1 Attachment** | **K2 Attachment**

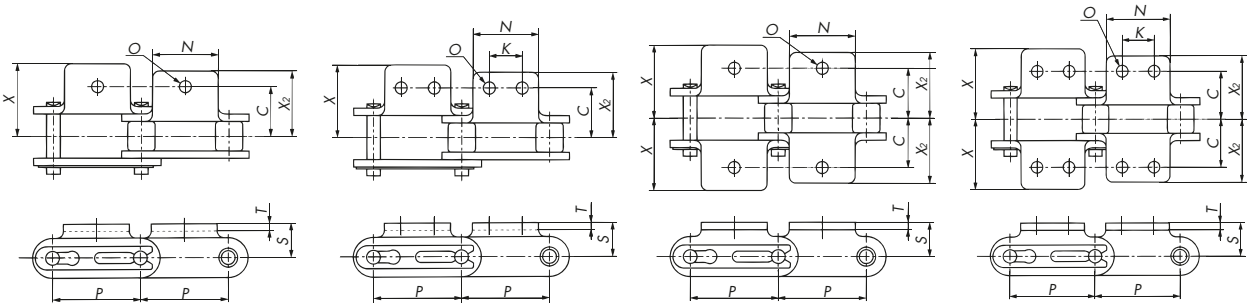

SA1 Attachment | **SA2 Attachment** | **EP Attachment**

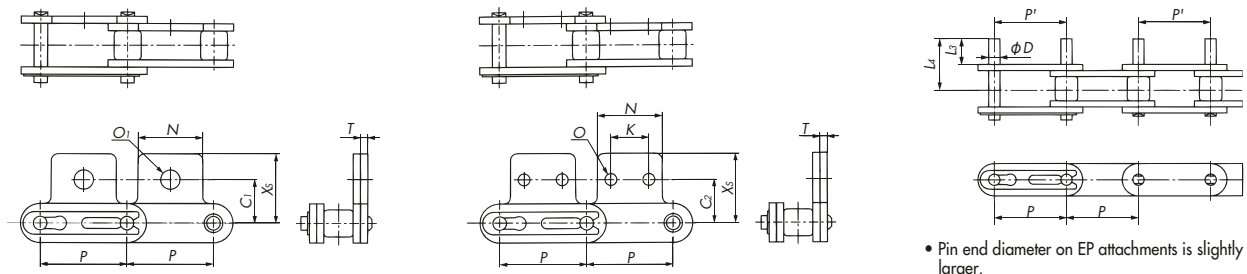

• Pin end diameter on EP attachments is slightly larger.
• Actual dimension P' may differ from P. Please contact a Tsubaki representative for details.

SK1 Attachment | **SK2 Attachment** | **GNK1 Attachment**

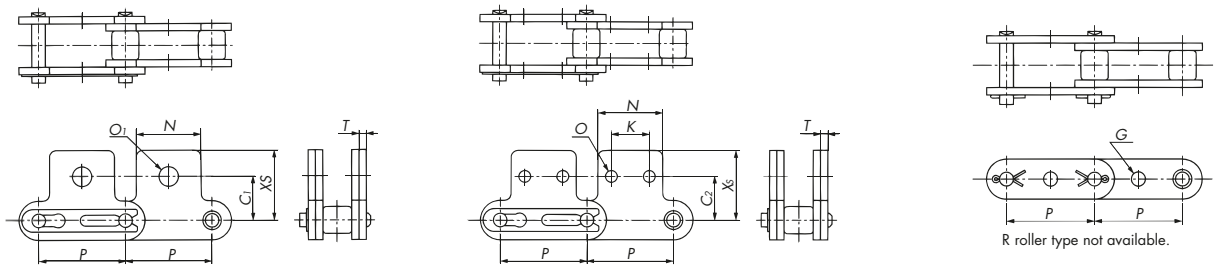

R roller type not available.

• Pins other than those on connecting links are riveted regardless of whether attachments are present.
• Attachments shown are S roller type. However, the dimensions for attachments are the same when R rollers are used. Also, the drawings show attachments added on every link.

Lambda Double Pitch Chain
Surface-Treated Lambda Double Pitch Chain
KF Series Lambda Double Pitch Chain

Base Chain Dimensions

Unit: mm

Tsubaki Chain No.			Roller Type	Pitch P	P'	Width Between Inner Link Plates W	Roller Dia. S Roller R_1	Roller Dia. R Roller R_2	Pin Dia. D	Pin L_1	Pin L_2	Offset Pin Length L	Plate Thickness T	Plate Height H
RF2040-LMC	RF2040-LMC-NP	RF2040-LMC-NEP	S • R	25.40	Contact a Tsubaki representative for retails.	7.95	7.92	15.88	3.97	8.25	9.95	18.2	1.5	12.0
RF2050-LMC	RF2050-LMC-NP	RF2050-LMC-NEP		31.75		9.53	10.16	19.05	5.09	10.30	12.0	22.6	2.0	15.0
RF2060-LMC	RF2060-LMC-NP	RF2060-LMC-NEP		38.10		12.70	11.91	22.23	5.96	14.55	16.55	31.5	3.2	17.2
RF2080-LMC	RF2080-LMC-NP	RF2080-LMC-NEP		50.80		15.88	15.88	28.58	7.94	18.30	20.90	39.9	4.0	23.0
RF2100-LMC	RF2100-LMC-NP	RF2100-LMC-NEP		63.50		19.05	19.05	39.69	9.54	21.80	24.50	47.5	4.8	28.6

Attachment Dimensions

Unit: mm

Tsubaki Chain No.			Attachment C	C_1	C_2	K	N	O	O_1	S	T	X	X_2	X_S	D	L_3	L_4	G
RF2040-LMC	RF2040-LMC-NP	RF2040-LMC-NEP	12.7	11.1	13.6	9.5	19.1	3.6	5.2	9.1	1.5	19.3	17.6	19.8	3.97	9.5	16.75	4.1
RF2050-LMC	RF2050-LMC-NP	RF2050-LMC-NEP	15.9	14.3	15.9	11.9	23.8	5.2	6.8	11.1	2.0	24.2	22.0	24.6	5.09	11.9	21.0	5.1
RF2060-LMC	RF2060-LMC-NP	RF2060-LMC-NEP	21.45	17.5	19.1	14.3	28.6	5.2	8.7	14.7	3.2	31.5	28.2	30.6	5.96	14.3	27.45	6.1
RF2080-LMC	RF2080-LMC-NP	RF2080-LMC-NEP	27.8	22.2	25.4	19.1	38.1	6.8	10.3	19.1	4.0	40.7	36.6	40.5	7.94	19.1	35.5	8.1
RF2100-LMC	RF2100-LMC-NP	RF2100-LMC-NEP	33.35	28.6	31.8	23.8	47.6	8.7	14.3	23.4	4.8	49.9	44.9	50.4	9.54	23.8	43.4	10.1

Tsubaki Chain No.			Max. Allowable Load kN {kgf}	Approx. Mass (kg/m) S Roller	Approx. Mass (kg/m) R Roller	Additional Weight per Attachment (kg) A, SA	Additional Weight per Attachment (kg) K, SK	Additional Weight per Attachment (kg) EP	No. of Links per Unit
RF2040-LMC	RF2040-LMC-NP	RF2040-LMC-NEP	2.65{ 270}	0.51	0.87	0.003	0.006	0.001	120
RF2050-LMC	RF2050-LMC-NP	RF2050-LMC-NEP	4.31{ 440}	0.84	1.30	0.006	0.012	0.002	96
RF2060-LMC	RF2060-LMC-NP	RF2060-LMC-NEP	6.28{ 640}	1.51	2.19	0.017	0.034	0.003	80
RF2080-LMC	RF2080-LMC-NP	RF2080-LMC-NEP	10.7 {1090}	2.41	3.52	0.032	0.064	0.007	60
RF2100-LMC	RF2100-LMC-NP	RF2100-LMC-NEP	17.1 {1740}	3.54	5.80	0.06	0.12	0.012	48

Note: Dimensions O and O_1 are slightly smaller on NEP Series Lambda Chains.

Operating Temperature Range:

- Lambda Double Pitch Chain: -10 to 150°C
- Surface-Treated Lambda Double Pitch Chain: -10 to 150°C
- KF Series Lambda Double Pitch Chain: -10 to 230°C

(However, factor in temperature selection when selecting KF Series Lambda Chain.)

Chain Numbering

RF2040S-LMC-NP-1LK2

- Chain size
- Roller type
  - S: S roller
  - R: R roller
- Chain type
  - LMC: Lambda Attachment Chain
  - LMC-KF: KF Series Lambda Attachment Chain
- Surface treatment
  - NP Series: NP
  - NEP Series: NEP
- Attachment spacing
- Attachment type

Sample Order

Chain size=RF2040 Roller type=S Rollers
Chain type=Lambda Attachment Chain Chain series=NP Series
Attachment spacing/type=1LK2 Qty.=400 links

Chain No.	Quantity	Unit
RF2040S-LMC-NP-1LK2	400	L

*See the Tsubaki Small Size Conveyor Chain catalog for more information on ordering.

⚠ Do not use in environments over 230°C, as this will lead to a considerable decrease in wear life. Harmful gases may be emitted in temperatures over 280°C.

Long Life Lambda Double Pitch Chain (X-Lambda)

Base Chain

S Roller

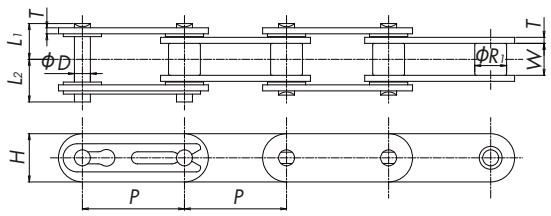

R Roller

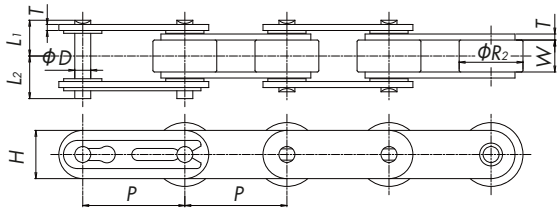

- Connecting links: RF2040-LMCX to RF2060-LMCX use spring clips. RF2080-LMCX and RF2100-LMCX use cotter pins. Base chain pins are riveted.

Attachments

A1 Attachment

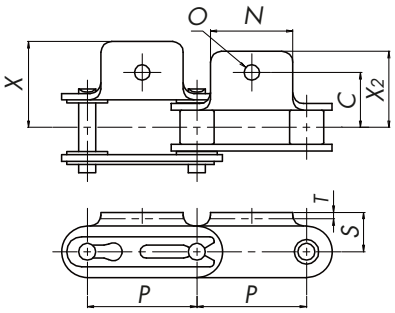

A2 Attachment

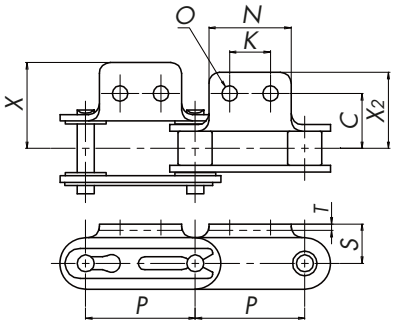

K1 Attachment

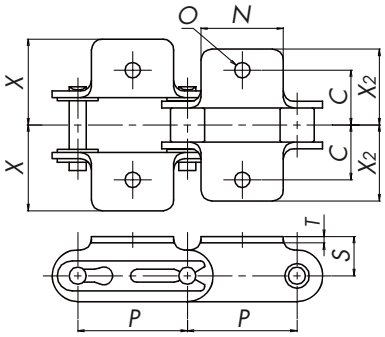

K2 Attachment

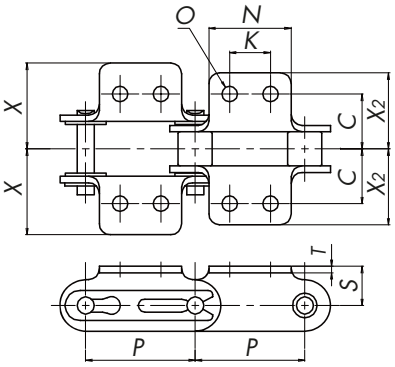

SA1 Attachment

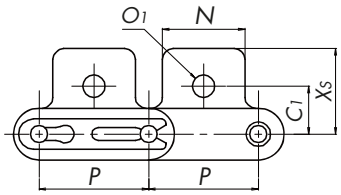

SA2 Attachment

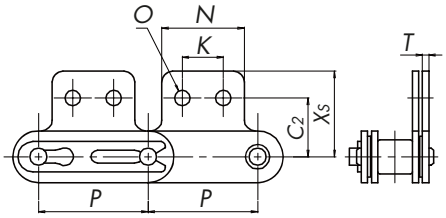

SK1 Attachment

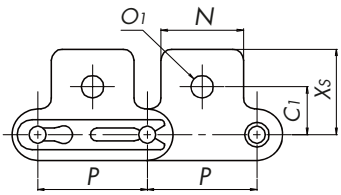

SK2 Attachment

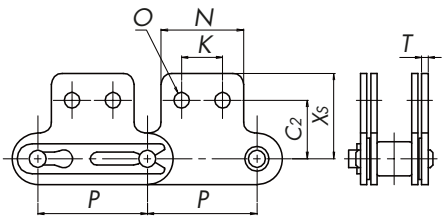

- Attachments shown are S roller type. However, the dimensions for attachments are the same when R rollers are used. Drawings show attachments added on every link.
- When attachments are to be installed on each even-numbered link, they will be installed on the inner link. Please specify if they must be installed on the outer link.

Long Life Lambda Double Pitch Chain (X-Lambda)

Base Chain Dimensions

Unit: mm

Tsubaki Chain No.	Roller Type	Pitch *P*	Width Between Inner Link Plates *W*	Roller Dia.		Pin			Plate		Max. Allowable Load kN {kgf}
				S Roller R_1	S Roller R_2	Dia. *D*	L_1	L_2	Thickness *T*	Height *H*	
RF2040-LMCX	S・R	25.40	7.95	7.92	15.88	3.97	8.90	10.6	1.5	12.0	2.65 { 270}
RF2050-LMCX		31.75	9.53	10.16	19.05	5.09	11.0	12.7	2.0	15.0	4.31 { 440}
RF2060-LMCX		38.10	12.70	11.91	22.23	5.96	15.25	17.15	3.2	17.2	6.28 { 640}
RF2080-LMCX		50.80	15.88	15.88	28.58	7.94	19.15	21.75	4.0	23.0	10.7 {1090}
RF2100-LMCX		63.50	19.05	19.05	39.69	9.54	22.6	25.3	4.8	28.6	17.1 {1740}

Attachment Dimensions

Unit: mm

Tsubaki Chain No.	Attachment												Approx. Mass (kg/m)		Additional Weight per Attachment (kg)		No. of Links per Unit
	C	C_1	C_2	*K*	*N*	*O*	O_1	*S*	*T*	*X*	X_2	*XS*	S Roller	R Roller	A, SA	K, SK	
RF2040-LMCX	12.7	11.1	13.6	9.5	19.1	3.6	5.2	9.1	1.5	19.9	17.6	19.8	0.51	0.87	0.003	0.006	120
RF2050-LMCX	15.9	14.3	15.9	11.9	23.8	5.2	6.8	11.1	2.0	24.85	22.0	24.6	0.84	1.30	0.006	0.012	96
RF2060-LMCX	21.45	17.5	19.1	14.3	28.6	5.2	8.7	14.7	3.2	32.4	28.2	30.6	1.51	2.19	0.017	0.034	80
RF2080-LMCX	27.8	22.2	25.4	19.1	38.1	6.8	10.3	19.1	4.0	41.6	36.6	40.5	2.43	3.54	0.032	0.064	60
RF2100-LMCX	33.35	28.6	31.8	23.8	47.6	8.7	14.3	23.4	4.8	50.8	44.9	50.4	3.56	5.82	0.06	0.12	48

Operating Temperature Range: -10 to 60°C

*Contact a Tsubaki representative regarding use above 60°C.

- See “Connecting” on pg. 11 for information on handling the connecting link. Note that the shape of the felt seal is round and differs from felt seals on RS X-Lambda Chain. Four felt seals are installed on each connecting link.
- Due to the felt seals, X-Lambda pin length (L1, L2) is slightly longer than that on standard attachment chain. The X dimension is also longer on X-Lambda chain attachments than on standard attachments. Please check that there will be no interference with equipment.
- Made-to-order product.
- Offset links are not available for X-Lambda Chain. Use an even number of links.

Chain Numbering

RF2040S-LMCX-1LK2

- Chain size
- Roller type
  - S: S roller
  - R: R roller
- Chain type
  - LMCX: X-Lambda Attachment Chain
- Attachment spacing
- Attachment type

Sample Order

Chain size=RF2040 Roller type=S Rollers
Chain type=X-Lambda Attachment Chain
Attachment spacing/type=1LK2 Qty.=400 links

Chain No.	Quantity	Unit
RF2040S-LMCX-1LK2	400	L

*See the Tsubaki Small Size Conveyor Chain catalog for more information on ordering.

Lambda RS Attachment Chain
Surface-Treated Lambda RS Attachment Chain
KF Series Lambda RS Attachment Chain

Base Chain

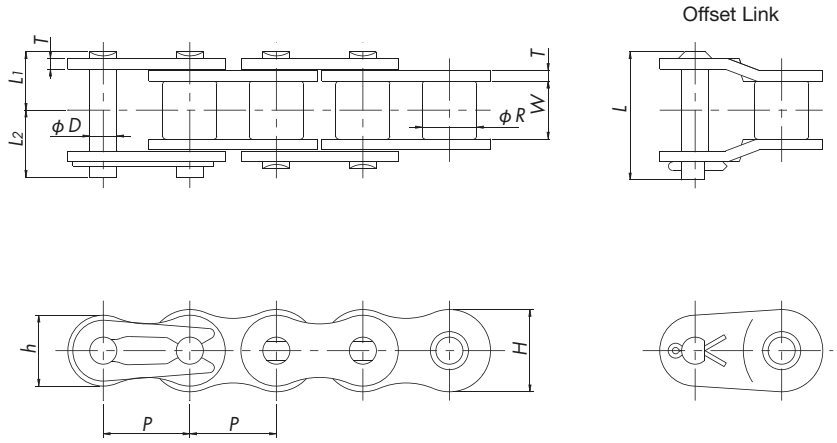

- Connecting links: RS35-LMC to RS60-LMC use spring clips. RS80-LMC and RS100-LMC use cotter pins. Base chain pins are riveted.
- RS35-LMC is a bushed chain.

Attachments

A1 Attachment

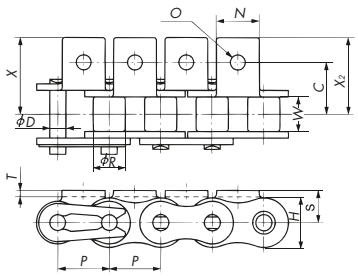

K1 Attachment

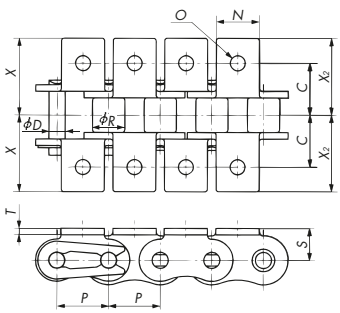

EP Attachment

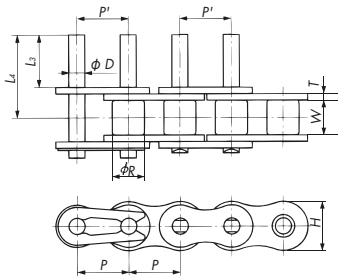

- Pin end diameter on EP attachments is slightly larger.
- Actual dimension P' may differ from P. Please contact a Tsubaki representative for details.

SA1 Attachment

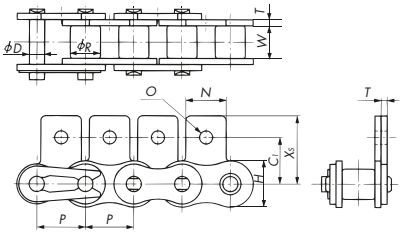

SK1 Attachment

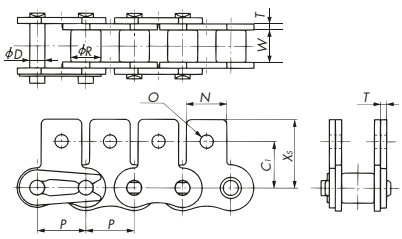

- Pins other than those on connecting links are riveted regardless of whether attachments are present.
- Drawings show attachments added on every link.

Lambda RS Attachment Chain
Surface-Treated Lambda RS Attachment Chain
KF Series Lambda RS Attachment Chain

Base Chain Dimensions

Unit: mm

Tsubaki Chain No.			Pitch P	P'	Width Between Inner Link Plates W	Roller Dia. (Bush Dia.) R	Pin				Plate			Max. Allowable Load kN {kgf}	Approx. Mass (kg/m)	No. of Links per Unit
							Dia. D	L_1	L_2	L	Thickness T	Height H	Height h			
RS35-LMC	RS35-LMC-NP	RS35-LMC-NEP	9.525	Contact a Tsubaki representative for details.	4.78	(5.08)	3.00	5.85	6.85	13.5	1.25	9.0	7.8	1.52{ 155}	0.33	320
RS40-LMC	RS40-LMC-NP	RS40-LMC-NEP	12.70		7.95	7.92	3.97	8.25	9.95	18.2	1.5	12.0	10.4	2.65{ 270}	0.64	240
RS50-LMC	RS50-LMC-NP	RS50-LMC-NEP	15.875		9.53	10.16	5.09	10.3	12.0	22.6	2.0	15.0	13.0	4.31{ 440}	1.04	192
RS60-LMC	RS60-LMC-NP	RS60-LMC-NEP	19.05		12.70	11.91	5.96	12.85	14.75	28.2	2.4	18.1	15.6	6.28{ 640}	1.53	160
RS80-LMC	RS80-LMC-NP	RS80-LMC-NEP	25.40		15.88	15.88	7.94	16.25	19.25	36.6	3.2	24.1	20.8	10.7 {1090}	2.66	120
RS100-LMC	RS100-LMC-NP	RS100-LMC-NEP	31.75		19.05	19.05	9.54	19.75	22.85	43.7	4.0	30.1	26.0	17.1 {1740}	3.99	96

Attachment Dimensions

Unit: mm

Tsubaki Chain No.			Attachment										Additional Weight per Attachment (kg)		
			C	C_1	N	O	S	X	X_2	X_S	L_3	L_4	A, SA	K, SK	EP
RS35-LMC	RS35-LMC-NP	RS35-LMC-NEP	9.5	9.5	7.9	3.4	6.35	14.3	14.3	14.55	9.5	14.6	0.0008	0.0016	0.0008
RS40-LMC	RS40-LMC-NP	RS40-LMC-NEP	12.7	12.7	9.5	3.6	8.0	17.8	17.8	17.40	9.5	16.75	0.002	0.004	0.001
RS50-LMC	RS50-LMC-NP	RS50-LMC-NEP	15.9	15.9	12.7	5.2	10.3	23.4	23.4	23.05	11.9	21.0	0.003	0.006	0.002
RS60-LMC	RS60-LMC-NP	RS60-LMC-NEP	19.05	18.3	15.9	5.2	11.9	28.2	28.2	26.85	14.3	25.75	0.007	0.014	0.003
RS80-LMC	RS80-LMC-NP	RS80-LMC-NEP	25.4	24.6	19.1	6.8	15.9	36.6	36.6	35.45	19.1	33.85	0.013	0.026	0.007
RS100-LMC	RS100-LMC-NP	RS100-LMC-NEP	31.75	31.8	25.4	8.7	19.8	44.9	44.9	44.0	23.8	41.75	0.026	0.052	0.012

- Pin diameters for Lambda RS35-LMC and standard RS35 differ and therefore they cannot be connected together.
- RS35-LMC has no rollers.
- Dimension D of the RS35-LMC EP attachment is φ3.0mm and is smaller than that of standard RS35.
- Dimension O is slightly smaller on NEP Series Lambda Chains.
- The connecting link plates for KF Series Lambda Chains use a special black oxide coating.
  KF Series Lambda Chains use a special 2 pitch offset link (2POL). Contact a Tsubaki representative for more information.

Operating Temperature Range:

- Lambda RS Attachment Chain: -10 to 150°C
- Surface-Treated Lambda RS Attachment Chain: -10 to 150°C
- KF Series Lambda RS Attachment Chain: -10 to 230°C

Chain Numbering

RS40-LMC-NP-1LSA1

- Chain size
- Chain type
  - LMC: Lambda Attachment Chain
  - LMC-KF: KF Series Lambda Attachment Chain
- Surface treatment
  - NP Series: NP
  - NEP Series: NEP
- Attachment spacing
- Attachment type

Sample Order

Chain size=RS40
Chain type=Lambda Attachment Chain Chain series=NP Series
Attachment spacing/type=1LSA1 Qty.=400 links

Chain No.	Quantity	Unit
RS40-LMC-NP-1LSA1	400	L

*See the Tsubaki Small Size Conveyor Chain catalog for more information on ordering.

⚠ Do not use in environments over 230°C, as this will lead to a considerable decrease in wear life. Harmful gases may be emitted in temperatures over 280°C.

Long Life Lambda RS Attachment Chain (X-Lambda)

Base Chain

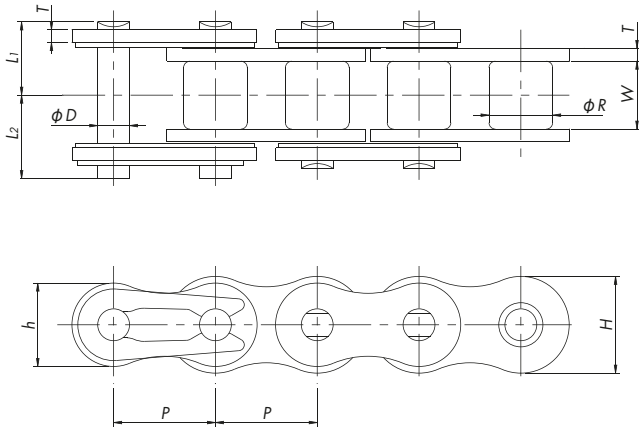

• Connecting links: RS40-LMCX to RS60-LMCX use spring clips.RS80-LMCX and RS100-LMCX use cotter pins. Base chain pins are riveted.

Attachments

A1 Attachment

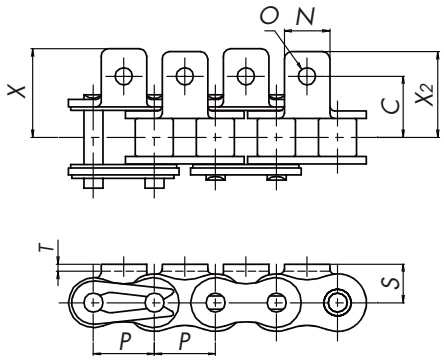

K1 Attachment

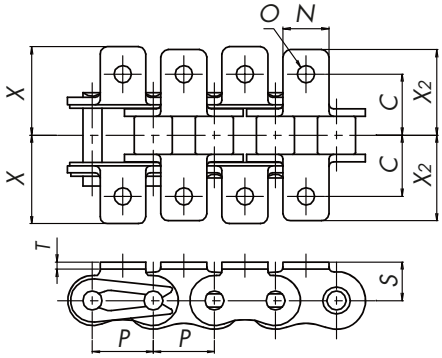

SA1 Attachment

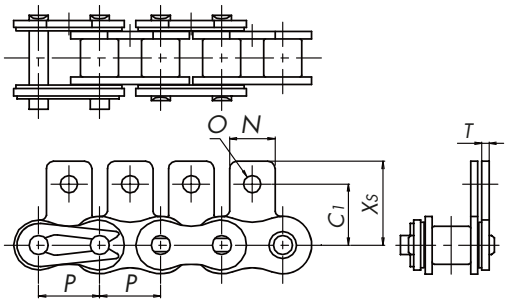

SK1 Attachment

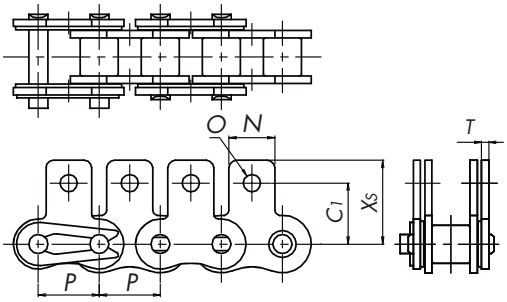

• Pins other than those on connecting links are riveted regardless of whether attachments are present.
• Drawings show attachments added on every link.
• When attachments are to be installed on each even-numbered link, they will be installed on the inner link. Please specify when they must be installed on the outer link.

Long Life Lambda RS Attachment Chain

Base Chain Dimensions

Unit: mm

Tsubaki Chain No.	Pitch P	Width Between Inner Link Plates W	Roller Dia. R	Pin			Plate			Max. Allowable Load kN {kgf}	Approx. Mass (kg/m)	No. of Links per Unit
				Dia. D	L_1	L_2	Thickness T	Height H	Height h			
RS40-LMCX	12.70	7.95	7.92	3.97	8.90	10.6	1.5	12.0	10.4	2.65{ 270}	0.64	240
RS50-LMCX	15.875	9.53	10.16	5.09	11.0	12.7	2.0	15.0	13.0	4.31{ 440}	1.04	192
RS60-LMCX	19.05	12.70	11.91	5.96	13.7	15.6	2.4	18.1	15.6	6.28{ 640}	1.53	160
RS80-LMCX	25.40	15.88	15.88	7.94	17.1	20.1	3.2	24.1	20.8	10.7 {1090}	2.69	120
RS100-LMCX	31.75	19.05	19.05	9.54	20.6	23.6	4.0	30.1	26.0	17.1 {1740}	4.02	96

Attachment Dimensions

Unit: mm

Tsubaki Chain No.	Attachment								Additional Weight per Attachment (kg)	
	C	C_1	N	O	S	X	X_2	X_S	A, SA	K, SK
RS40-LMCX	12.7	12.7	9.5	3.6	8.0	18.40	17.8	17.40	0.002	0.004
RS50-LMCX	15.9	15.9	12.7	5.2	10.3	24.10	23.4	23.05	0.003	0.006
RS60-LMCX	19.05	18.3	15.9	5.2	11.9	29.05	28.2	26.85	0.007	0.014
RS80-LMCX	25.4	24.6	19.1	6.8	15.9	37.5	36.6	35.45	0.013	0.026
RS100-LMCX	31.75	31.8	25.4	8.7	19.8	45.6	44.9	44.0	0.026	0.052

Operating Temperature Range:

-10 to 60°C *Contact a Tsubaki representative regarding use above 60°C.

- Due to the felt seals, X-Lambda pin length (L1, L2) is slightly longer than that on standard and Lambda RS attachment chain. The X dimension is also longer on X-Lambda chain attachments than on standard attachments. Please check that there will be no interference with equipment.
- Made-to-order product.
- Offset links are not available for X-Lambda Chain. Use an even number of links.

Connecting:

When assembling, use connecting links designed for X-Lambda Chain (with felt seals). As shown in the above diagram, insert felt seals between the outer plates and connecting plates, and attach the link. The felt seals are impregnated with oil. Be careful to ensure that oil is not squeezed out.

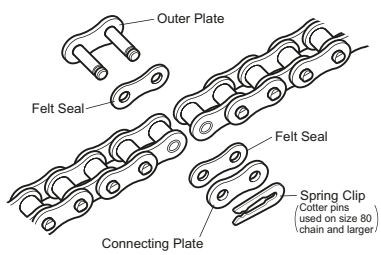

How to Assemble a Connecting Link

Chain Numbering

RS40-LMCX-1LSA1

- Chain size
- Chain type LMCX: X-Lambda Attachment Chain
- Attachment type
- Attachment spacing

Sample Order

Chain size=RS40
Chain type=X-Lambda Attachment Chain
Attachment spacing/type=1LSA1 Qty.=400 links

Chain No.	Quantity	Unit
RS40-LMCX-1LSA1	400	L

*See the Tsubaki Small Size Conveyor Chain catalog for more information on ordering.

BS Lambda Attachment Chain

Base Chain

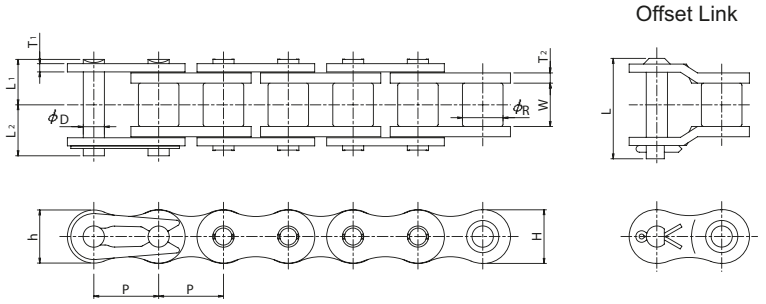

Attachments

A1 Attachment

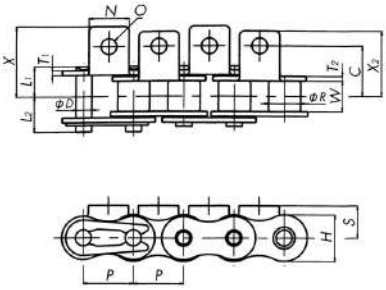

K1 Attachment

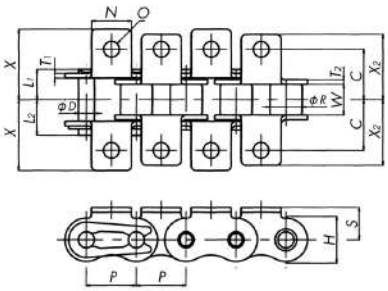

EP Attachment

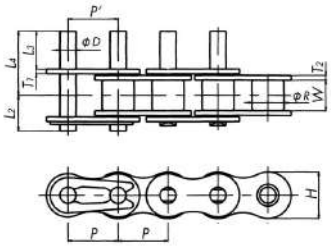

- Pin end diameter on EP attachments is slightly larger.
- Actual dimension P' may differ from P. Please contact a Tsubaki representative for details.

SA1 Attachment

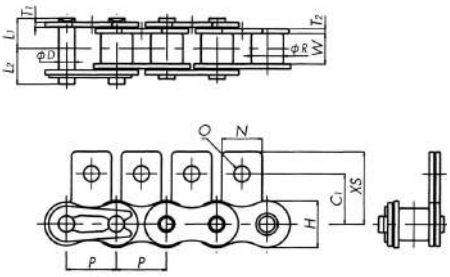

SK1 Attachment

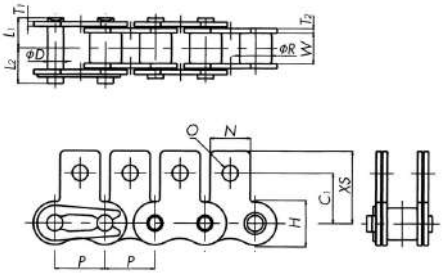

WA1, WA2 Attachments

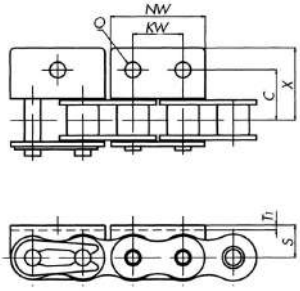

WK1, WK2 Attachments

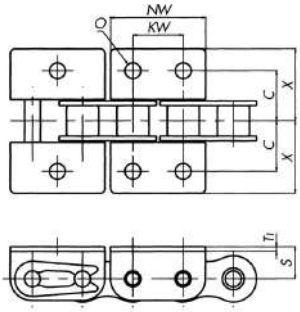

WSA1, WSA2 Attachments

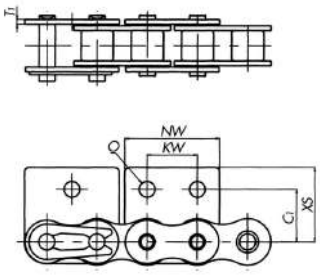

WSK1, WSK2 Attachments

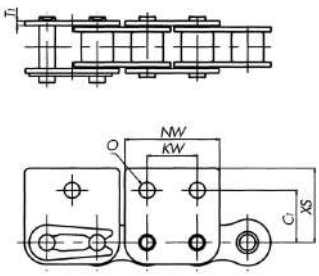

BS Lambda Attachment Chain

Base Chain Dimensions

Unit: mm

Tsubaki Chain No.	Pitch P	P'	Roller Dia. R	Width Between Inner Link Plates W	Plate Thickness T_2	Plate Thickness T_1	Plate Height H	Plate Height h	Pin Dia. D
RS08B-LM	12.70	Contact a Tsubaki representative for details.	8.51	7.75	1.6	1.6	12.0	10.4	4.45
RS10B-LM	15.875		10.16	9.65	1.5	1.5	14.7	13.7	5.08
RS12B-LM	19.05		12.07	11.68	1.8	1.8	16.1	16.1	5.72
RS16B-LM	25.40		15.88	17.02	4.0	3.2	21.0	21.0	8.28

Tsubaki Chain No.	Pin Length L_1+L_2	Pin Length L_1	Pin Length L_2	Offset Pin Length L	Min. Tensile Strength kN {kgf}	Approx. Mass (kg/m)	No. of Links per Unit
RS08B-LM	18.4	8.4	10.0	18.6	13.7{1400}	0.70	240
RS10B-LM	20.8	9.55	11.25	20.8	16.1{1640}	0.95	192
RS12B-LM	24.1	11.1	13.0	24.4	19.5{1990}	1.25	160
RS16B-LM	37.7	17.75	19.95	39.3	54.1{5520}	2.70	120

Attachment Dimensions

Unit: mm

Tsubaki Chain No.	A1, SA1, K1, SK1 Attachments C	C_1	N	O	S	X	X_2	X_S	Additional Weight per Attachment (kg) A, SA	K, SK
RS08B-LM	11.9	12.7	11.4	4.2	8.9	19.05	17.15	19.3	0.002	0.004
RS10B-LM	15.9	15.9	12.7	5.0	10.2	22.25	20.6	22.9	0.003	0.006
RS12B-LM	19.05	22.2	16.5	7.1	13.5	29.85	27.8	32.05	0.006	0.012
RS16B-LM	23.8	23.9	24.3	6.7	15.2	37.35	34.4	34.1	0.014	0.028

Tsubaki Chain No.	WA2, WSA2, WK2, WSK2 Attachments WA1, WSA1, WK1, WSK1 Attachments C	C_1	NW	O	S	X	X_S	KW	EP Attachment D	L_3	L_4	Additional Weight per Attachment (kg) WA, WSA	WK, WSK	EP
RS08B-LM	12.7	13.1	24.6	4.9	8.9	20.3	20.7	12.7	4.45	9.5	17.0	0.005	0.010	0.001
RS10B-LM	15.9	16.6	30.0	5.0	10.2	22.85	23.6	15.9	5.08	11.9	20.25	0.006	0.012	0.002
RS12B-LM	17.45	17.6	34.8	5.5	11.4	25.65	25.75	19.1	5.72	14.3	24.1	0.009	0.018	0.003
RS16B-LM	28.6	26.0	46.0	8.1	15.9	39.25	36.7	25.4	8.28	19.1	35.25	0.030	0.060	0.008

Operating Temperature Range:

–10°C to 150°C

Sprockets:

BS Roller Chain sprockets (conforming to ISO B Series) must be used.

Pin Shape:

Single-strand chains in sizes RS08B-LM through RS16B-LM use easy disassembly pins (with center sink riveting). All other sizes, including multi-strand chains, use double stake riveting.

Chain Selection:

Contact a Tsubaki representative regarding chain selection.

■ Made-to-order product.

Special Orders:

Tsubaki can manufacture special attachments and special extended pins, as well as RF06B, RS20B, and RS24B Attachment Chain having dimensions other than those given above. Contact a Tsubaki representative for more information.

Note:

When replacing European standard attachment chain with Lambda Chain, note that dimensions may be different than Tsubaki standard dimensions. Be sure to check attachment dimensions before ordering.

Chain Numbering

No. **RS08B-LM-1LA1**

- Chain size
- Chain type: LM: BS Lambda Chain
- Attachment spacing
- Attachment type

Sample Order

Chain size=RS08B
Chain type=BS Lambda Chain
Attachment spacing/type=1LA1 Qty.=400 links

Chain No.	Quantity	Unit
RS08B-LM-1LA1	400	L

*See the Tsubaki Small Size Conveyor Chain catalog for more information on ordering.

Lambda RF Roller Chain

Base Chain

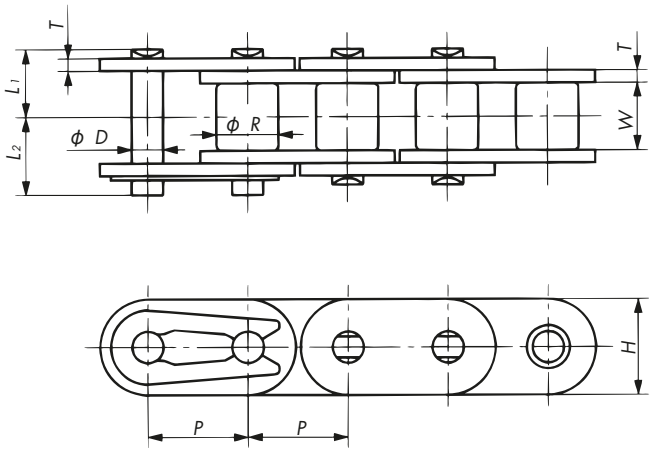

• Connecting links: RF40-LMC to RF60-LMC use spring clips. RF80-LMC and larger use cotter pins.

Base Chain Dimensions

Unit: mm

Tsubaki Chain No.	Pitch P	Roller Dia. R	Width Between Inner Link Plates W	Plate		Pin			Max. Allowable Load kN {kgf}	Approx. Mass (kg/m)	No. of Links per Unit
				Thickness T	Height H	Dia. D	L1	L2			
RF40-LMC	12.70	7.92	7.95	1.5	12.0	3.97	8.25	9.95	2.65{ 270}	0.74	240
RF50-LMC	15.875	10.16	9.53	2.0	15.0	5.09	10.3	12.0	4.31{ 440}	1.22	192
RF60-LMC	19.05	11.91	12.70	2.4	18.1	5.96	12.85	14.75	6.28{ 640}	1.78	160
RF80-LMC	25.40	15.88	15.88	3.2	24.1	7.94	16.25	19.25	10.7 {1090}	3.09	120
RF100-LMC	31.75	19.05	19.05	4.0	28.6	9.54	19.75	22.85	17.1 {1740}	4.43	96

All other models are made-to-order.

Operating Temperature Range: –10°C to 150°C

Sprockets: RS standard sprockets can be used.

Offset links are not available for Lambda RF Roller Chain. Use an even number of links.

Chain Numbering

RF40-LMC

Chain size

Chain type
LMC: Lambda Attachment Chain

Sample Order

Chain size=RF40
Chain type=Lambda Attachment Chain
Qty.=400 links

Chain No.	Quantity	Unit
RF40-LMC	400	L

*See the Tsubaki Small Size Conveyor Chain catalog for more information on ordering.

Lambda Hollow Pin Chain

Double Pitch

Lambda Hollow Pin Double Pitch Chain

Base Chain

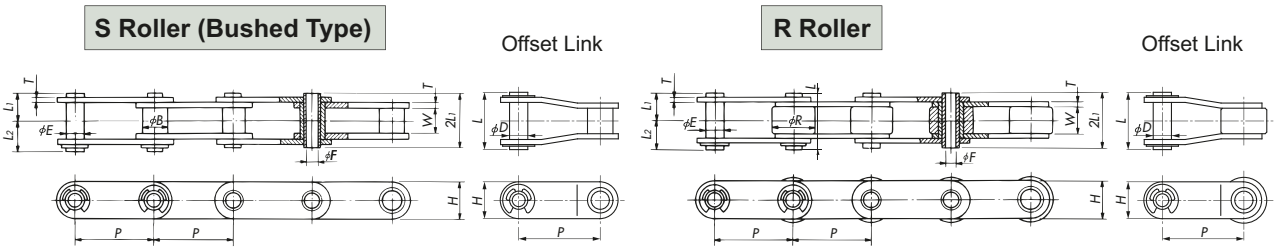

Base Chain Dimensions

Unit: mm

Tsubaki Chain No.	Roller Type	Pitch P	Bush Dia. B	Roller Dia. R	Width Between Inner Link Plates W	Plate Thickness T	Plate Height H	Pin Outer Dia. E	Pin Inner Dia. F (min.)	Pin L1	Pin L2	Offset Pin Length L	Approx. Mass (kg/m) Bushed Type	Approx. Mass (kg/m) R Roller	No. of Links per Unit
RF2040-LMC-HP	S・R	25.40	7.92	15.88	7.95	1.5	12.0	5.68	4.00	8.00	9.50	19.1	0.46	0.82	120
RF2050-LMC-HP		31.75	10.16	19.05	9.53	2.0	15.0	7.22	5.12	10.05	11.65	23.4	0.75	1.21	96
RF2060-LMC-HP		38.10	11.91	22.23	12.70	2.4	17.2	8.38	5.99	12.55	14.25	28.7	1.38	2.06	80
RF2080-LMC-HP		50.80	15.88	28.58	15.88	3.2	23.0	11.375	8.02	16.25	17.80	35.7	1.80	2.81	60

RS

Lambda Hollow Pin RS Chain

Base Chain

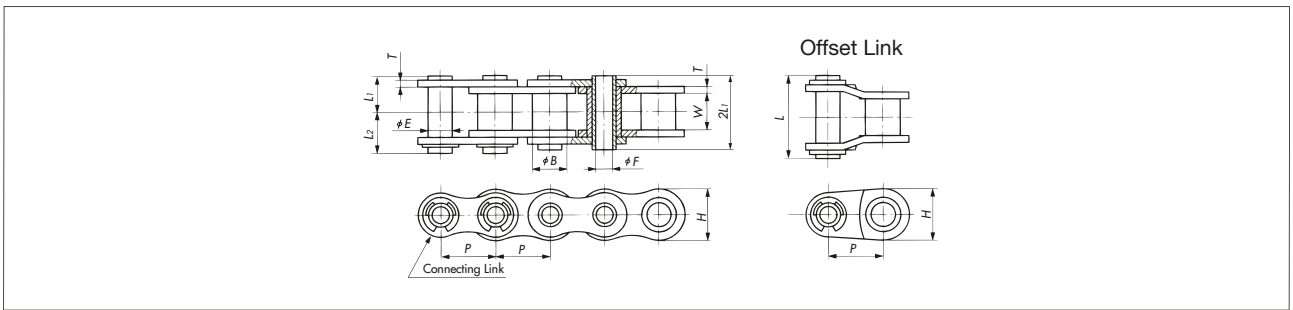

Base Chain Dimensions

Unit: mm

Tsubaki Chain No.	Pitch P	Bush Dia. B	Width Between Inner Link Plates W	Plate Thickness T	Plate Height H	Pin Outer Dia. E	Pin Inner Dia. F (min.)	Pin L1	Pin L2	Offset Pin Length L	Approx. Mass(kg/m)	No. of Links per Unit
RS40-LMC-HP	12.70	7.92	7.95	1.5	12.0	5.68	4.00	8.00	9.50	19.1	0.53	240
RS50-LMC-HP	15.875	10.16	9.53	2.0	15.0	7.22	5.12	10.05	11.65	23.4	0.86	192
RS60-LMC-HP	19.05	11.91	12.70	2.4	18.1	8.38	5.99	12.55	14.25	28.7	1.27	160
RS80-LMC-HP	25.40	15.88	15.88	3.2	24.1	11.375	8.02	16.25	17.80	35.7	2.15	120

Operating Temperature Range: –10°C to 150°C

Sprockets:

Double Pitch Chain: Double Pitch sprockets can be used.
Use of Standard RS sprockets is limited to S roller types with 30T or more.

RS Chain: Standard RS sprockets can be used.

■ Made-to-order product.

Chain Numbering

RF2040S-LMC-HP

- Chain size
- Roller type: S: S roller, R: R roller
- Chain type: Lambda Hollow Pin Chain

RS40-LMC-HP

- Chain size
- Chain type: Lambda Hollow Pin Chain

Sample Order

Chain size=RS40
Chain type=Lambda Hollow Pin Chain
Qty.=400 links

Chain No.	Quantity	Unit
RS40-LMC-HP	400	L

*See the Tsubaki Small Size Conveyor Chain catalog for more information on ordering.

Lambda Plastic Roller Conveyor Chain

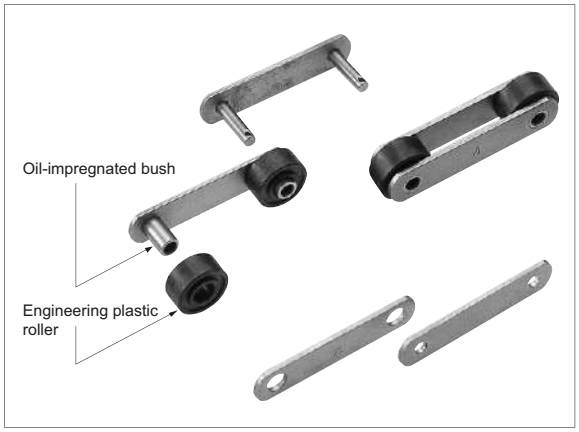

1. Lube free, long life
Offers 7x the pin-bush and bush-roller wear life of DT Series without additional lubrication.

2. Quiet
5-7dB quieter than steel rollers. Eliminates screeching sounds caused when rollers rotate.

3. Low running resistance
Has 55% less running resistance than steel rollers (without additional lubrication).

4. Clean
Minimizes the generation of metallic wear debris.

5. Lightweight
30% lighter than steel rollers.

6. Compatibility
Dimensionally compatible with conveyor chains and can be used as is as a replacement. (Strength and other elements must be confirmed.)

Specifications

Material			Operating Temperature	Roller coefficient of rotational friction	Chain speed	Sprocket
Roller	Bush	Other parts				
Engineering plastic	Oil-impregnated bush	Steel	0°C ~ 50°C	0.07 (dry)	Less than 25m/min	Standard RF sprockets

1. Plates are carbon steel with a special black oxide coating.
2. Roller coefficient of rotational friction is when there is little dust, ambient temperatures, and indoor use.

Maximum Allowable Load

Unit

Sprocket No. of Teeth \ Sprocket No. of Teeth	6		7		8		9		10	
	kN	{kgf}	kN	{kgf}	kN	{kgf}	kN	{kgf}	kN	{kgf}
RF03075-LMC	1.47	{150}	1.86	{190}	1.96	{200}	1.96	{200}	1.96	{200}
RF03100-LMC	1.86	{190}	1.96	{200}	1.96	{200}	1.96	{200}	1.96	{200}
RF05100-LMC	2.65	{270}	3.33	{340}	4.21	{430}	5.20	{530}	5.20	{530}
RF05125-LMC	3.74	{380}	4.71	{480}	5.20	{530}	5.20	{530}	5.20	{530}
RF05150-LMC	4.90	{500}	5.20	{530}	5.20	{530}	5.20	{530}	5.20	{530}

Notes: 1. The above chart shows the maximum allowable load for R rollers at chain speeds less than 25m/min.
2. Maximum allowable load for F rollers is 70% of the above.
3. Refer to the Selection section for calculating loads acting on the chain.

Dimensions

Base chain and attachment dimensions are the same as for RF Conveyor Chain.

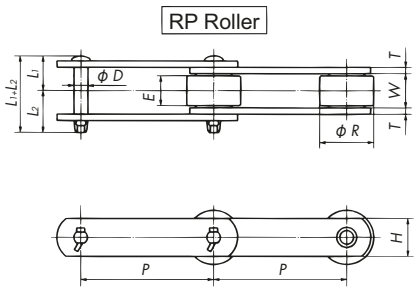

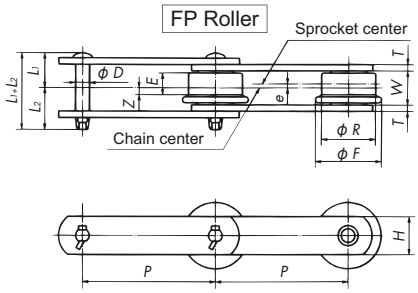

Tsubaki Chain No.	Pitch P	RP Roller Dia. R	RP Roller Contact Width E	FP Roller Dia. R	FP Roller Flange dia. F	FP Roller Contact Width E	FP Roller Off-center e	FP Roller Z	Inner Link Inner Width W	Plate Width H	Plate Thickness T	Pin Dia. D	Pin L1+L2	Pin L1	Pin L2	Allowable Load per Roller kN	Allowable Load per Roller {kgf}	Approximate Mass kg/m
RF03075-LMC	75	31.8	15.5	31.8	42	12	1.8	4.3	16.1	22	3.2	8.0	38	18	20	0.49	{50}	1.9
RF03100-LMC	100																	1.7
RF05100-LMC	100	40	19	40	50	14	2.5	4.5	22	32	4.5	11.3	53.5	25	28.5	0.83	{85}	3.6
RF05125-LMC	125																	3.4
RF05150-LMC	150																	3.2

Chain Numbering

RF03100RP-LMC-1LK2

- Chain size
- Roller type:
  - RP: Engineering plastic R roller
  - FP: Engineering plastic F roller
- Chain type
  - LMC: Lambda Conveyor Chain
- Attachment spacing
- Attachment type

Sample Order

Chain size=RF03 Pitch=100mm
Roller type=Engineering plastic R Roller
Attachment type/spacing=1LA2 Qty.=400 links

Chain No.	Quantity	Unit
RF03100RP-LMC-1LA2	400	L

*See the Tsubaki Small Size Conveyor Chain catalog for more information on ordering.

Lambda Double Plus Chain

Base Chain

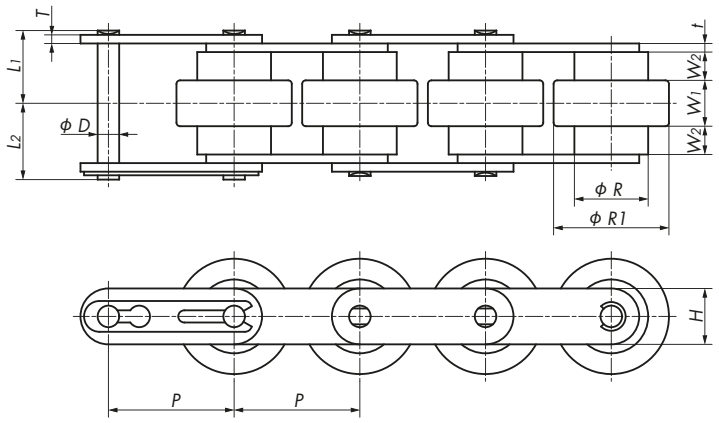

- RF2030VRP and RF2080VRP use a cotter pin for the connecting link.
- Lambda Double Plus Chain bushes are not notched.

Tsubaki Chain No.		Pitch	Roller		Width		Plate			Pin			Approximate Mass kg/m		No. of Links per Unit
Plastic Rollers	Steel Rollers	P	R	R1	W1	W2	t	T	H	D	L1	L2	Plastic rollers	Steel rollers	
RF2030VRP-LMC	RF2030VR-LMC	19.05	11.91	18.3	8.0	4.0	1.5	1.5	9.0	3.00	12.05	13.15	0.6	1.4	160
RF2040VRP-LMC	RF2040VR-LMC	25.40	15.88	24.6	10.3	5.7	2.0	1.5	12.0	3.97	15.8	17.0	1.0	2.5	120
RF2050VRP-LMC	RF2050VR-LMC	31.75	19.05	30.6	13.0	7.1	2.4	2.0	15.0	5.09	19.55	21.25	1.4	3.7	96
RF2060VRP-LMC	RF2060VR-LMC	38.10	22.23	36.6	15.5	8.5	3.2	3.2	17.2	5.96	24.5	26.4	2.0	5.6	80
RF2080VRP-LMC	RF2080VR-LMC	50.80	28.58	48.0	20.0	15.0	4.0	4.0	23.0	7.94	35.8	38.0	3.9	—	60

•Snap Covers are available for Lambda Double Plus Chain. Contact a Tsubaki representative for more information.
•The large and small steel rollers on Double Plus Chains need to be lubricated.
•Made-to-order product.

Chain Numbering

RF2040VRPB-LMC

Chain size

Chain type
VRP: Plastic rollers
VR : Steel rollers

Engineering plastic roller types
A, B, C, D
UA, UB (for RF2030 only)
Leave blank for steel rollers

Base chain
LMC: Lambda Chain

Sample Order

Chain size=RF2040 Chain type=Double Plus Chain with plastic rollers (VRP)
Base chain=Lambda Chain Engineering plastic roller type: B (High Friction type)
Snap Covers=None Qty.=400 links

Chain No.	Quantity	Unit
RF2040VRPB-LMC	400	L

*See the Tsubaki Small Size Conveyor Chain catalog for more information on ordering.

Sprockets for Double Plus Chain – Can be used with Snap Covers. (Steel sprocket)

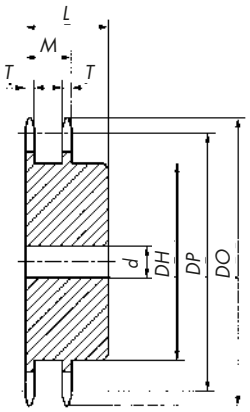

Chain Numbering

RF2030VRP-10T

Applicable chain size

No. of teeth: 10T

Notes: 1. Tooth tips are not hardened on any model.
2. Models in bold are stock items.
3. Stainless steel sprockets with the same dimensions are available.

Tsubaki Sprocket No.	No. of Engaging Teeth	Pitch Dia. Dp	Outer Dia. Do	Face Width T	Total Tooth Width M	Bore Dia. d		Hub Dia. DH	Total Width L	Approximate Mass kg	Material (Specifications)
						Pilot hole	Max.				
RF2030VRP-10T-SC	10	61.65	63	3.0	15.3	12.7	20	37	25	0.2	Carbon steel for machine structural use
RF2040VRP-10T-SC	10	82.20	85	4.0	20.4	15.9	32	52	40	0.8	
RF2050VRP-10T-SC	10	102.75	107	5.0	25.5	15.9	45	66	45	1.5	
RF2060VRP-10T-SC	10	123.30	128	6.0	30.5	19	55	81	50	2.5	
RF2080VRP-10T-SC	10	164.39	172	12.0	47.5	23	72	110	67	7.0	

Lambda Double Pitch Outboard Roller Chain

Chain Without Brake

Base Chain S Roller

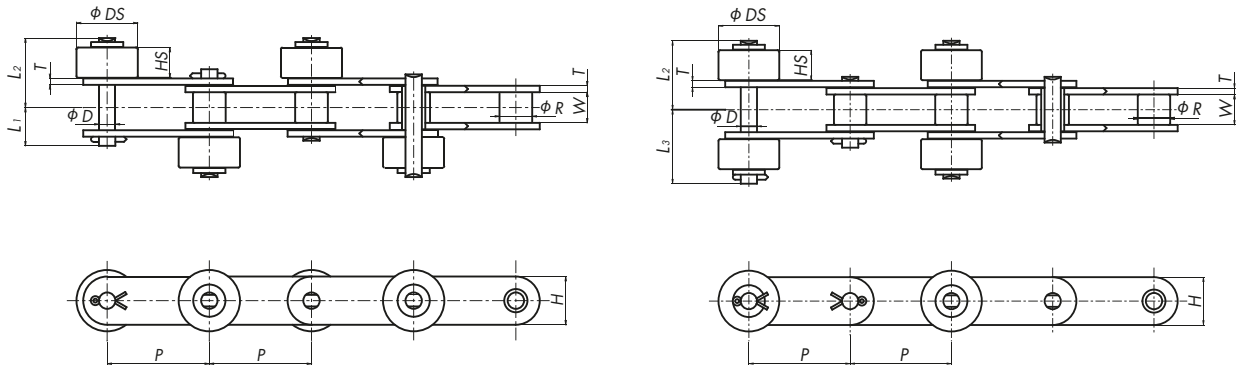

Base Chain R Roller

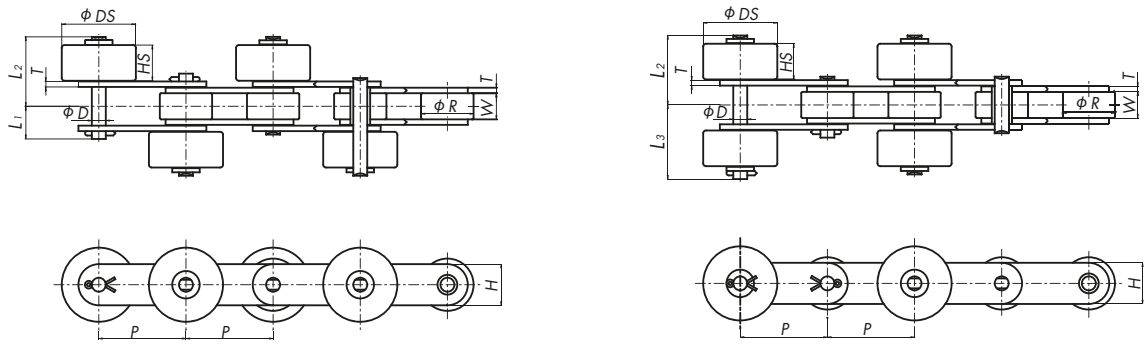

Unit: mm

Tsubaki Chain No. / Plastic Outboard Roller / Lambda	Roller Type	Pitch P	Roller Dia. R	Width Between Inner Link Plates W	Plate Thickness T	Plate Height H	Pin Dia. D	Pin L1	Pin L2	Pin L3	Outboard Roller DS	Outboard Roller HS	Approx. Mass (kg/m) Base Chain Steel Roller	Approx. Mass (kg/m) Base Chain Plastic Roller
RF2040S-LMC-SRP	S	25.40	7.92	7.95	1.5	12.0	3.97	9.65	17.9	19.3	15.88	7.8	0.66	—
RF2050S-LMC-SRP		31.75	10.16	9.53	2.0	15.0	5.09	11.9	21.6	23.3	19.05	9.4	1.03	—
RF2060S-LMC-SRP		38.10	11.91	12.70	3.2	17.2	5.96	16.95	29.65	32.05	22.23	12.6	1.80	—
RF2040R-LMC-SRP	R	25.40	15.88	7.95	1.5	12.0	3.97	9.65	23.1	24.5	23	13	1.24	0.89
RF2050R-LMC-SRP		31.75	19.05	9.53	2.0	15.0	5.09	11.9	25.3	27.0	27	13	1.70	1.23
RF2060R-LMC-SRP		38.10	22.23	12.70	3.2	17.2	5.96	16.95	29.65	32.05	30	12.6	2.64	1.93

Tsubaki Chain No. / Steel Outboard Roller / Lambda	Roller Type	Pitch P	Roller Dia. R	Width Between Inner Link Plates W	Plate Thickness T	Plate Height H	Pin Dia. D	Pin L1	Pin L2	Pin L3	Outboard Roller DS	Outboard Roller HS	Approx. Mass (kg/m)
RF2040S-LMC-SR	S	25.40	7.92	7.95	1.5	12.0	3.97	9.65	17.9	19.3	15.88	7.8	1.02
RF2050S-LMC-SR		31.75	10.16	9.53	2.0	15.0	5.09	11.9	21.6	23.3	19.05	9.4	1.53
RF2060S-LMC-SR		38.10	11.91	12.70	3.2	17.2	5.96	16.95	29.65	32.05	22.23	12.6	2.56
RF2040R-LMC-SR	R	25.40	15.88	7.95	1.5	12.0	3.97	9.65	23.1	24.5	23	13	—
RF2050R-LMC-SR		31.75	19.05	9.53	2.0	15.0	5.09	11.9	25.3	27.0	27	13	—
RF2060R-LMC-SR		38.10	22.23	12.70	3.2	17.2	5.96	16.95	29.65	32.05	30	12.6	—

Notes: 1. The mass given in the above table assumes that outboard rollers are installed on every link in a staggered installation (as illustrated above in the diagram on the left) or on every second link in a crosswise installation (as illustrated above in the diagram on the right).
2. All connecting links use a cutter pin.
3. Even if the chain with steel outboard rollers is Lambda Chain, the outboard rollers need to be lubricated.

Lambda Double Pitch Outboard Roller Chain

Chain with Brake

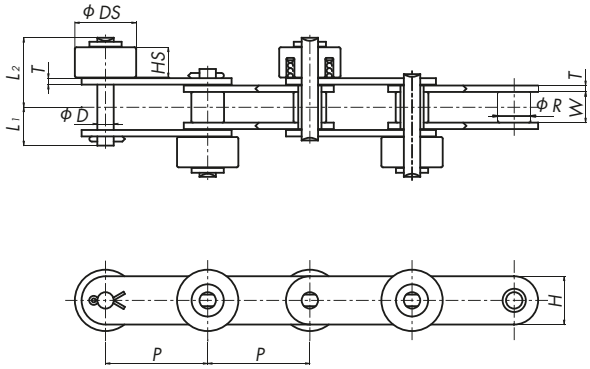

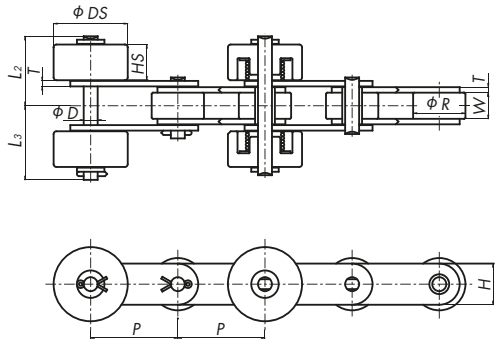

• The dimensional drawing is of a conductive type (spring brake). Chains with plastic brakes have the same structure as those with no brakes.

Unit: mm

Tsubaki Chain No. / Steel Outboard Roller / Lambda	Roller Type	Pitch P	Roller Dia. R	Width Between Inner Link Plates W	Plate Thickness T	Plate Height H	Pin Dia. D	Pin L1	Pin L2	Pin L3	Outboard Roller DS	Outboard Roller HS	Approx. Mass (kg/m)
RF2040S-LMC-SR	S	25.40	7.92	7.95	1.5	12.0	3.97	9.65	17.9	19.3	15.88	7.8	1.02
RF2050S-LMC-SR		31.75	10.16	9.53	2.0	15.0	5.09	11.90	21.6	23.2	19.05	9.4	1.53
RF2060S-LMC-SR		38.10	11.91	12.70	3.2	17.2	5.96	16.95	29.65	32.05	22.23	12.6	2.56
RF2040R-LMC-SR	R	25.40	15.88	7.95	1.5	12.0	3.97	9.65	23.1	24.5	23	13	—
RF2050R-LMC-SR		31.75	19.05	9.53	2.0	15.0	5.09	11.90	25.3	27.0	27	13	—
RF2060R-LMC-SR		38.10	22.23	12.70	3.2	17.2	5.96	16.95	29.65	32.05	30	12.6	—

Notes: 1. The mass given in the above table assumes that outboard rollers are installed on every link in a staggered installation (as illustrated on the upper left) or on every second link in a crosswise installation (as illustrated on the upper right).
2. All connecting links use a cotter pin.
3. Chains with electro-conductive rollers use spring brakes and are shown as SPRBE.

• Steel outboard rollers need to be lubricated.
• Operating temperature range: -10 to 150°C
• Avoid use around chemicals, in contact with water, or in wash down/degreasing operations.

Chain Numbering

RF2040R-LMC-1LSRP-H

Chain size

Base chain roller type
R: R Roller
S: S Roller
RP: Plastic R Roller

Chain type
LMC: Lambda Chain
(Cannot be combined with stainless steel base chains.)

Outboard roller installation
T: Staggered
H: Crosswise

Outboard roller type
SRP: Plastic roller
SR: Steel roller
SRPE: Electro-conductive roller

Outboard roller spacing
1L: Every link

Note: Indicate brake attachment spacing.

Sample Order

Chain size=RF2040 Roller type: R Roller
Chain type=Lambda Conveyor Chain
Outboard roller spacing: Every link
Outboard roller type/installation=
Plastic outboard rollers, crosswise installation

Chain No.	Quantity	Unit
RF2040R-LMC-1LSRP-H	400	L

*See the Tsubaki Small Size Conveyor Chain catalog for more information on ordering.

Lambda RS Outboard Roller Chain

Staggered Installation

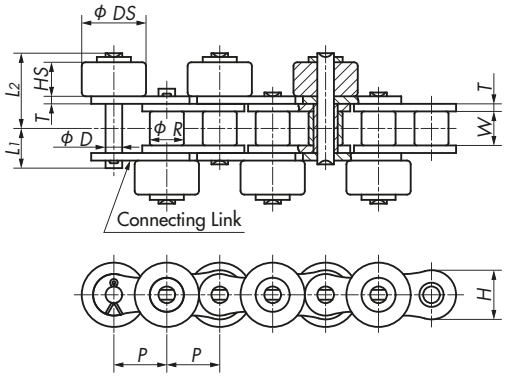

Crosswise Installation

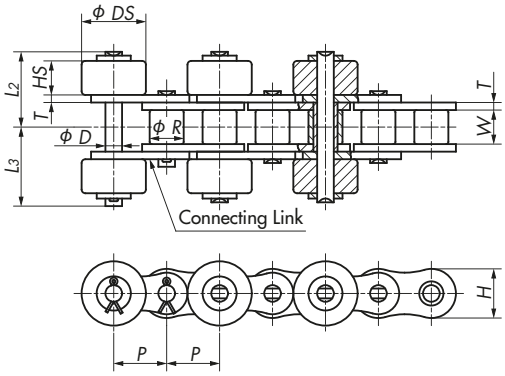

• The construction of the spring brake is the same as for Double Pitch Chain.

Chain Without Brake

Unit: mm

Tsubaki Chain No. / Plastic Outboard Roller Lambda	Pitch P	Roller Dia. R	Width Between Inner Link Plates W	Plate Thickness T	Plate Height H	Pin Dia. D	Pin L1	Pin L2	Pin L3	Outboard Roller DS	Outboard Roller HS	Approx. Mass (kg/m)
RS40-LMC-SRP	12.70	7.92	7.95	1.5	12.0	3.97	9.65	17.9	19.3	15.88	7.8	0.94
RS50-LMC-SRP	15.875	10.16	9.53	2.0	15.0	5.09	11.9	21.6	23.2	19.05	9.4	1.42
RS60-LMC-SRP	19.05	11.91	12.70	2.4	18.1	5.96	15.25	27.95	30.35	22.23	12.6	2.11

Tsubaki Chain No. / Steel Outboard Roller	Pitch P	Roller Dia. R	Width Between Inner Link Plates W	Plate Thickness T	Plate Height H	Pin Dia. D	Pin L1	Pin L2	Pin L3	Outboard Roller DS	Outboard Roller HS	Approx. Mass (kg/m)
RS40-LMC-SR	12.70	7.92	7.95	1.5	12.0	3.97	9.65	17.9	19.3	15.88	7.8	1.67
RS50-LMC-SR	15.875	10.16	9.53	2.0	15.0	5.09	11.9	21.6	23.2	19.05	9.4	2.42
RS60-LMC-SR	19.05	11.91	12.70	2.4	18.1	5.96	15.25	27.95	30.35	22.23	12.6	3.63

Notes: 1. The mass given in the above table assumes that outboard rollers are installed on every link in a staggered installation (as illustrated on the upper left) or on every second link in a crosswise installation (as illustrated on the upper right).
2. All connecting links use a cotter pin.
3. Steel outboard rollers need to be lubricated, even with Lambda Chain.

Chain with Brake

Unit: mm

Tsubaki Chain No. / Plastic Outboard Roller	Pitch P	Roller Dia. R	Width Between Inner Link Plates W	Plate Thickness T	Plate Height H	Pin Dia. D	Pin L1	Pin L2	Pin L3	Outboard Roller DS	Outboard Roller HS	Approx. Mass (kg/m)
RS40-LMC-SRPB	12.70	7.92	7.95	1.5	12.0	3.97	9.65	17.9	19.3	15.88	7.8	0.94
RS50-LMC-SRPB	15.875	10.16	9.53	2.0	15.0	5.09	11.9	21.6	23.2	19.05	9.4	1.42
RS60-LMC-SRPB	19.05	11.91	12.70	2.4	18.1	5.96	15.25	27.95	30.35	22.23	12.6	2.11

Notes: 1. The mass given in the above table assumes that outboard rollers are installed on every link in a staggered installation (as illustrated on the upper left) or on every second link in a crosswise installation (as illustrated on the upper right).
2. All connecting links use a cotter pin.
3. Chains with electro-conductive rollers use spring brakes and are shown as SPRBE.

• Steel outboard rollers need to be lubricated.
• Operating temperature range: -10 to 150°C
• Avoid use around chemicals, in contact with water, or in wash down/degreasing operations.
• Made-to-order product.

Chain Numbering

RS40-LMC-NP-1LSRP-T

Chain size

Chain type
LMC: Lambda Chain

(Cannot be combined with stainless steel base chains.)

Outboard roller spacing
1L: Every link

Outboard roller Installation
T : Staggered
H: Crosswise

Outboard roller type
SRP: Plastic roller
SR: Steel roller
SRPE: Electro-conductive roller

Notes: Indicate brake attachment spacing.

Lambda RS Outboard Roller Chain

Sprockets for RS Chain with Outboard Rollers (Steel)

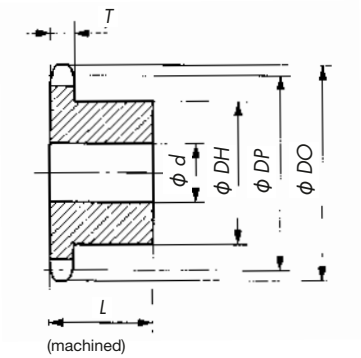

Model Numbering

RS401B9T-SR

Applicable chain size

No. of teeth: 9

Outboard roller

Unit: mm

Tsubaki Sprocket No.	No. of Teeth	Pitch Dia. *Dp*	Outer Dia. *Do*	Face Width *T*	Bore Dia. *d* Pilot Hole	Bore Dia. *d* Max.	Hub Dia. D_H	Total Width *L*	Approx. Mass (kg)	Material (Specification)
RS401B 09T-SR	9	37.13	43	7.3	9.5	10	20	22	0.08	Carbon Steel (machined)
RS401B 10T-SR	10	41.10	47			11	24		0.10	
RS401B 11T-SR	11	45.08	51			14	28		0.14	
RS401B 12T-SR	12	49.07	55			16	32		0.17	
RS401B 13T-SR	13	53.07	59		12.7	20	36		0.22	
RS401B 14T-SR	14	57.07	63			22	40		0.27	
RS401B 15T-SR	15	61.08	67			26	44		0.32	
RS401B 16T-SR	16	65.10	71			28	48		0.38	
RS401B 17T-SR	17	69.12	76			32	52		0.44	
RS401B 18T-SR	18	73.14	80			35	56		0.50	
RS401B 19T-SR	19	77.16	84			38	60		0.57	
RS401B 20T-SR	20	81.18	88			42	64	25	0.72	
RS401B 21T-SR	21	85.21	92			44	68		0.80	
RS401B 22T-SR	22	89.24	96			46	72		0.90	
RS401B 23T-SR	23	93.27	100			50	76		0.98	
RS501B 09T-SR	9	46.42	53	8.9	9.5	12	26	25	0.15	
RS501B 10T-SR	10	51.37	58			16	31		0.21	
RS501B 11T-SR	11	56.35	63		12.7	20	36		0.25	
RS501B 12T-SR	12	61.34	68			23	41		0.32	
RS501B 13T-SR	13	66.34	73			27	46		0.41	
RS501B 14T-SR	14	71.34	78			31	51		0.51	
RS501B 15T-SR	15	76.35	83			35	56		0.61	
RS501B 16T-SR	16	81.37	88			38	61		0.71	
RS501B 17T-SR	17	86.39	93			43	66		0.82	
RS501B 18T-SR	18	91.42	100			46	71	28	0.98	
RS601B 09T-SR	9	55.70	63	11.9	9.5	16	32	32	0.30	
RS601B 10T-SR	10	61.65	68		12.7	20	37		0.37	
RS601B 11T-SR	11	67.62	76			26	44		0.52	
RS601B 12T-SR	12	73.60	82			30	50		0.68	
RS601B 13T-SR	13	79.60	88		15.9	35	56		0.80	
RS801B 09T-SR	9	74.26	85	15	15.9	26	44	40	0.65	
RS801B 13T-SR	13	106.14	118		19	50	76		1.88	
RS801B 15T-SR	15	122.17	135			62	92		2.57	
RS1001B 10T-SR	10	102.75	117	18	18	40	62	50	1.82	
RS1001B 11T-SR	11	112.70	127		23	46	72		2.21	
RS1001B 12T-SR	12	122.67	138			52	81		2.73	

Notes: 1. The tooth tips are hardened on all models.
2. All models are made to order.
3. Models other than those listed above can be used with RS standard sprockets.
4. Contact a Tsubaki representative regarding delivery.

Sprockets for Double Pitch Outboard Roller Chain

Double Pitch sprockets can be used for all double pitch outboard roller chains.

Double Pitch Chain with Top Rollers

Base Chain S Roller

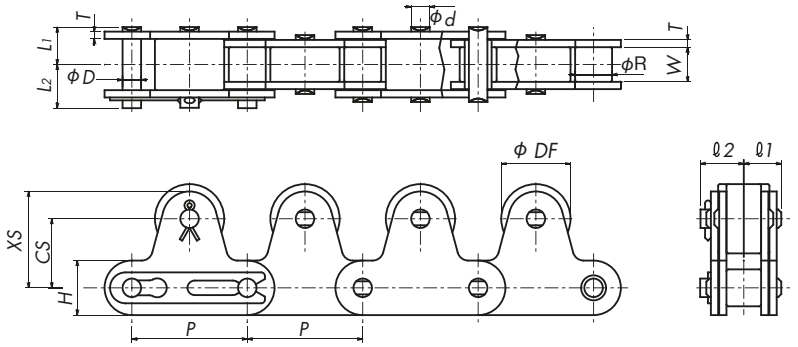

Base Chain R Roller

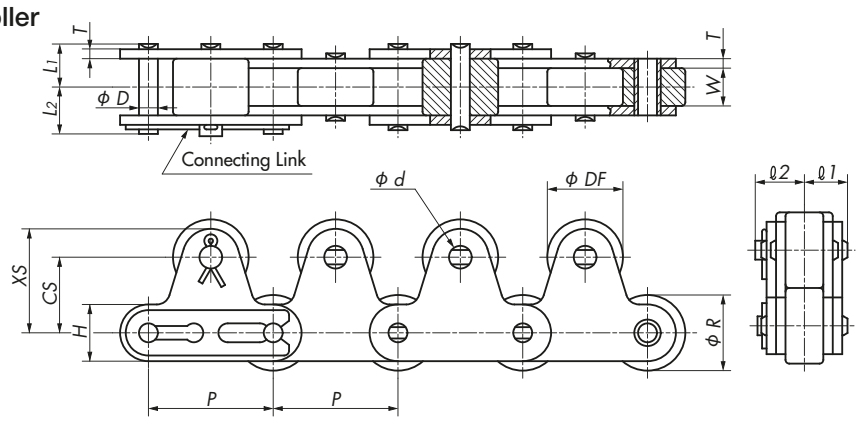

1. RF2040 to RF2060 use spring clips for the connecting link. Other sizes use cotter pins.
2. When a top roller is installed on each even-numbered link, the top roller will be installed on the inner link unless otherwise specified.

Unit: mm

Tsubaki Chain No. Plastic Top Roller Lambda	Pitch P	Width Between Inner Link Plates W	Roller Dia. R S Roller	Roller Dia. R R Roller	Pin Dia. D	Pin L1	Pin L2	Plate Height H	Plate Thickness T	Top Roller DF	Top Roller CS	Top Roller XS	Top Roller ℓ1	Top Roller ℓ2	Top Roller d	Approx. Mass (kg/m) S Roller	Approx. Mass (kg/m) R Roller	Approx. Mass (kg/m) Plastic R Roller
RF2040S-LMC-TRP	25.40	7.95	7.92	15.88	3.97	8.25	9.95	12.0	1.5	15.88	15.0	21.0	8.25	9.65	3.97	0.91	—	—
RF2050S-LMC-TRP	31.75	9.53	10.16	19.05	5.09	10.3	12.0	15.0	2.0	19.05	19.0	26.5	10.3	11.9	5.09	1.44	—	—
RF2060S-LMC-TRP	38.10	12.70	11.91	22.23	5.96	14.55	16.55	17.2	3.2	22.23	23.0	31.6	14.55	16.95	5.96	2.77	—	—
RF2040R-LMC-TRP	25.40	7.95	7.92	15.88	3.97	8.25	9.95	12.0	1.5	15.88	15.0	21.0	8.25	9.65	3.97	—	1.27	0.92
RF2050R-LMC-TRP	31.75	9.53	10.16	19.05	5.09	10.3	12.0	15.0	2.0	19.05	19.0	26.5	10.3	11.9	5.09	—	1.90	1.43
RF2060R-LMC-TRP	38.10	12.70	11.91	22.23	5.96	14.55	16.55	17.2	3.2	22.23	23.0	31.6	14.55	16.95	5.96	—	3.46	2.75

Tsubaki Chain No. Steel Top Roller Lambda	Pitch P	Width Between Inner Link Plates W	Roller Dia. R S Roller	Roller Dia. R R Roller	Pin Dia. D	Pin L1	Pin L2	Plate Height H	Plate Thickness T	Top Roller DF	Top Roller CS	Top Roller XS	Top Roller ℓ1	Top Roller ℓ2	Top Roller d	Approx. Mass (kg/m) S Roller	Approx. Mass (kg/m) R Roller
RF2040S-LMC-TR	25.40	7.95	7.92	15.88	3.97	8.25	9.95	12.0	1.5	15.88	15.0	21.0	8.25	9.65	3.97	1.33	—
RF2050S-LMC-TR	31.75	9.53	10.16	19.05	5.09	10.3	12.0	15.0	2.0	19.05	19.0	26.5	10.3	11.9	5.09	2.04	—
RF2060S-LMC-TR	38.10	12.70	11.91	22.23	5.96	14.55	16.55	17.2	3.2	22.23	23.0	31.6	14.55	16.95	5.96	3.68	—
RF2040R-LMC-TR	25.40	7.95	7.92	15.88	3.97	8.25	9.95	12.0	1.5	15.88	15.0	21.0	8.25	9.65	3.97	—	1.69
RF2050R-LMC-TR	31.75	9.53	10.16	19.05	5.09	10.3	12.0	15.0	2.0	19.05	19.0	26.5	10.3	11.9	5.09	—	2.50
RF2060R-LMC-TR	38.10	12.70	11.91	22.23	5.96	14.55	16.55	17.2	3.2	22.23	23.0	31.6	14.55	16.95	5.96	—	4.36

- Steel top rollers need to be lubricated.
- Operating temperature range: -10 to 150°C.
- Avoid use around chemicals, in contact with water, or in wash down/degreasing operations.
- Made-to-order product.

Chain Numbering

RF2040R-LMC-1LTRP

Chain size

Base chain roller type
R : R Roller
S : S Roller
RP: Plastic Roller

Chain type
LMC: Lambda Chain

Top roller type
TR : Steel roller
TRP: Plastic roller

Top roller spacing
1L: Every link

Note: SS Series cannot be combined with LMC Series.

RS Lambda Chain with Top Rollers

Top Rollers Installed on Every Second Link

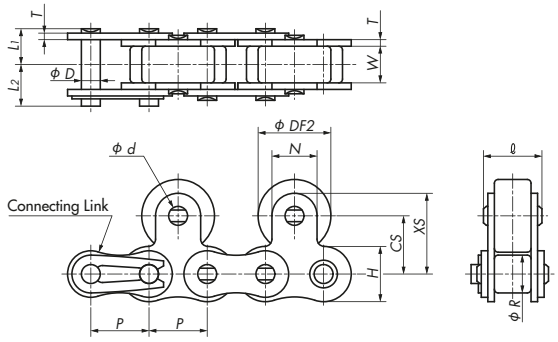

Top Rollers Installed on Every Link

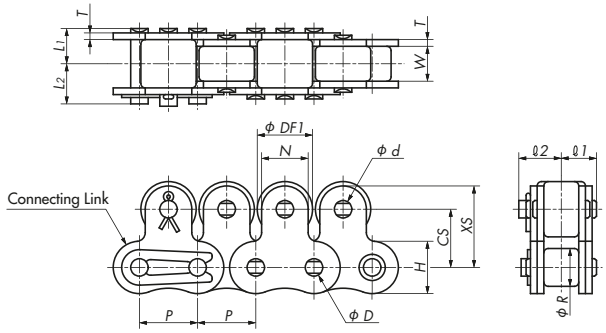

Unit: mm

Tsubaki Chain No. / Plastic Top Roller / Lambda	Pitch P	Width Between Inner Link Plates W	Base Chain Roller Dia. R	Pin Dia. D	Pin L1	Pin L2	Plate Height H	Plate Thickness T	Top Roller DF1	Top Roller DF2	Top Roller CS	Top Roller XS	Top Roller ℓ1	Top Roller ℓ2	Top Roller d	Approx. Mass (kg/m) On Every Link	Approx. Mass (kg/m) On Every 2nd Link
RS40-LMC-TRP	12.7	7.95	7.92	3.97	8.25	9.95	12.0	1.5	11.0	15.88	12.7	17.45	8.25	9.65	3.97	0.92	0.85
RS50-LMC-TRP	15.875	9.53	10.16	5.09	10.3	12.0	15.0	2.0	15.0	19.05	15.9	22.25	10.3	11.9	5.09	1.56	1.38
RS60-LMC-TRP	19.05	12.70	11.91	5.96	12.85	14.75	18.1	2.4	18.0	22.23	18.3	26.25	12.85	15.25	5.96	2.30	2.03

Tsubaki Chain No. / Steel Top Roller / Lambda	Pitch P	Width Between Inner Link Plates W	Base Chain Roller Dia. R	Pin Dia. D	Pin L1	Pin L2	Plate Height H	Plate Thickness T	Top Roller DF1	Top Roller DF2	Top Roller CS	Top Roller XS	Top Roller ℓ1	Top Roller ℓ2	Top Roller d	Approx. Mass (kg/m) On Every Link	Approx. Mass (kg/m) On Every 2nd Link
RS40-LMC-TR	12.7	7.95	7.92	3.97	8.25	9.95	12.0	1.5	11.0	15.88	12.7	17.45	8.25	9.65	3.97	1.83	1.41
RS50-LMC-TR	15.875	9.53	10.16	5.09	10.3	12.0	15.0	2.0	15.0	19.05	15.9	22.25	10.3	11.9	5.09	2.39	2.18
RS60-LMC-TR	19.05	12.70	11.91	5.96	12.85	14.75	18.1	2.4	18.0	22.23	18.3	26.25	12.85	15.25	5.96	3.60	3.18

Notes: 1. "On Every Link" and "On Every 2nd Link" as shown in the "Approx. Mass" column refer to the spacing of the top rollers.
2. RS40 to RS60 use spring clips on the connecting links, while RS80 to RS100 use cotter pins.
3. When a top roller is installed on each even-numbered link, the top roller will be installed on the inner link unless otherwise specified.

- Steel top rollers need to be lubricated.
- Operating temperature range: -10 to 150°C.
- Avoid use around chemicals, in contact with water, or in wash down/degreasing operations.
- Made-to-order product.

Chain Numbering

RS40-LMC-1LTRP

- Chain size
- Chain type: LMC: Lambda Chain
- Top roller spacing
- Top roller type: TR : Steel roller; TRP: Plastic roller

Note: SS Series cannot be combined with LMC Series.

Sprockets for RS Lambda Chain with Top Rollers (Steel)

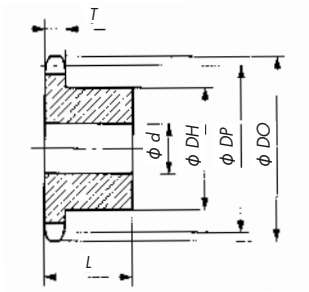

Model Numbering Example

RF2040R1200T-TR

- Applicable chain size
- No. of teeth (1200T: 12T)
- For top roller chain

Sprocket Model No.	Roller Type	No. of Teeth	Pitch Dia. Dp	Outer Dia. (Do)	Face Width T	Bore Dia. d Pilot hole	Bore Dia. d Max.	Hub Dia. DH	Total Width L	Approx. Mass kg	Material (Specifications)
RF2040R 1100T-TR	For R Rollers	11	90.16	97	7.3	12.7	42	63	25	0.8	Carbon steel for machine structural use (finished)
RF2040R 1200T-TR		12	98.14	105						0.9	
RF2040R 1300T-TR		13	106.14	114						0.9	
RF2050R 1100T-TR		11	112.70	124	8.9	15.9	48	73	28	1.3	
RF2050R 1200T-TR		12	122.67	134		18				1.3	
RF2050R 1300T-TR		13	132.67	144						1.5	
RF2060R 1100T-TR		11	135.24	150	11.9	18	55	83	45	2.6	
RF2060R 1200T-TR		12	147.21	162						2.8	
RF2060R 1300T-TR		13	159.20	175						3.1	
RF2080R 1100T-TR		11	180.31	109	15	28	75	107	45	4.8	
RF2080R 1200T-TR		12	196.28	216						5.3	
RF2080R 1300T-TR		13	212.27	232						5.9	
RF2100R 1100T-TR		11	225.39	244	18	33	80	117	56	7.9	

Notes: 1. Tooth tips are hardened on all models.
2. All models are made-to-order products.
3. RS standard sprockets can be used with RF Double Pitch Chain (S Rollers) or when the number of engaging teeth of the sprocket is 15T or more (no. of sprocket teeth: 30T).
4. Contact a Tsubaki representative regarding delivery.

Lambda Chain Specialty Attachments

1. In addition to standard attachments, Tsubaki has extensive experience in providing custom integrated attachments to meet your application, equipment, environment, and workpiece needs.
2. Integrated attachments are manufactured to your standards.
3. Available with Lambda Chain.

Press Nut and Threaded Hole Chain

Press nuts can be inserted into holes on chain attachments, or holes can be tapped to provide a threaded hole in chain attachments. This special attachment allows slats or jigs to be attached using only machine screws or bolts, significantly improving work efficiency.

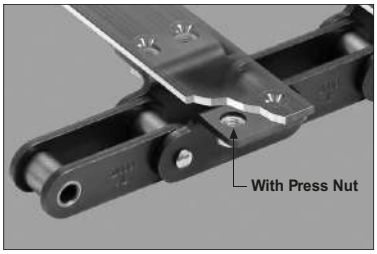

Chain with K2 attachment and press nut

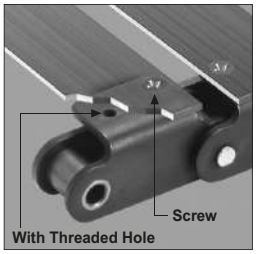

Chain with bent-over A2 attachment and threaded hole

Chain with K1 and SA1 attachments and press nut

Free Flow Chain

This chain consists of a Lambda base chain with freely rotating rollers. Although the base chain does not require lubrication, steel top rollers and steel outboard rollers must be lubricated. (Plastic top rollers and plastic outboard rollers do not require lubrication.)

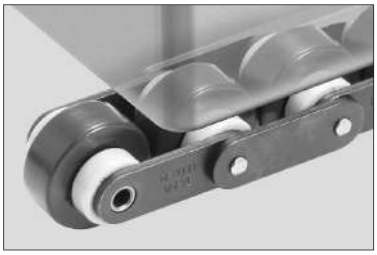
Double Plus Chain

Top Roller Chain

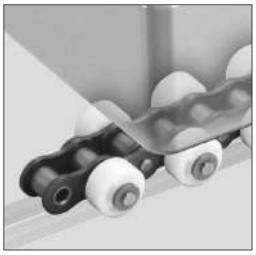
Outboard Roller Chain

Direct Loading Top Chain

This chain is designed to allow various types of machine parts and container products (such as bottles, cans, and paper packs) to be placed directly on the chain for conveyance. The base chain is Lambda Chain.

TS Top Chain

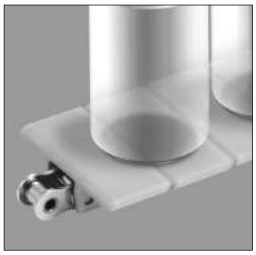
TN Top Chain

RT Roller Table

Direct Loading Chain with Special Attachments

This is Lambda Chain with special attachments to match the shape of the workpiece, such as round bars, pipes, small boxes, etc.

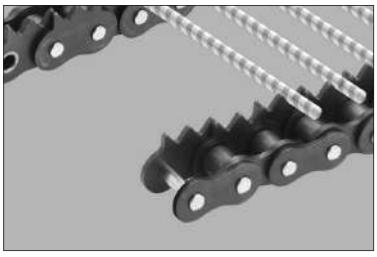
Chain with triangle attachments for conveying bar-type objects

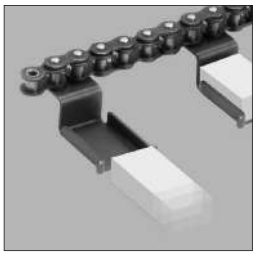
Chain with tray attachments for conveying small boxes

Chain with V-shaped attachments for conveying pipes

Lambda Chain Specialty Attachments

Direct Loading Bent Attachment Chain

This chain is designed to allow pallets, cardboard boxes, plastic containers, etc., to be placed directly on the chain for conveyance. Stainless steel attachments, upper-layer attachments, and rubber attachments can be custom made according to the application.

Chain with upper-layer attachments (stainless steel)

Double Pitch Chain with upper-layer attachments

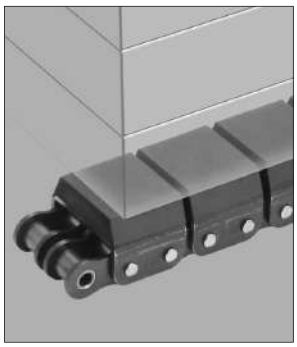
Double-strand chain with rubber attachments

Extended Pin with Thread Chain

This chain featu res extended pins, threaded extended pins, or extended pins with spring clips to enable installation of various attachments. The attachments can be secu red by nuts, inserted into tubing, or attached to spring clips.

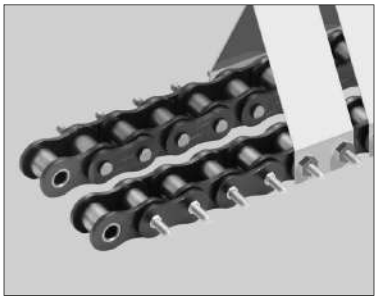
Chain with threaded extended pins

Extended pin chain

Extended pin chain with spring clips

Bar, Slat, and Wire Mesh Conveyor Chain

Special attachment chain to match the shape of attached tools or jigs such as slats with holes, stepped bars, squa re bars, round bars, etc.

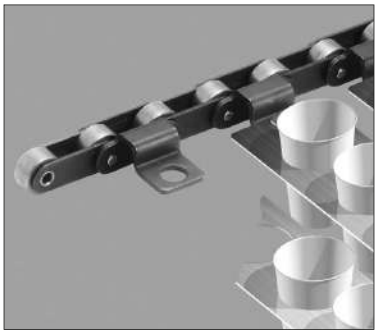
Chain for conveyor with slats with holes
(Chain center and slats are at the same level)

Stepped bar chain (Ends are inserted into holes in attachments)

Square bar chain

Hollow Pin Chain for wire mesh conveyor with guide rollers

Round bar attachment bush chain

Chains That Convey by Sandwiching Workpieces between Chains

These chains form two conveyors that sandwich an object between them using the stay pins of the chain, or a bent-over open-box-shaped attachment.

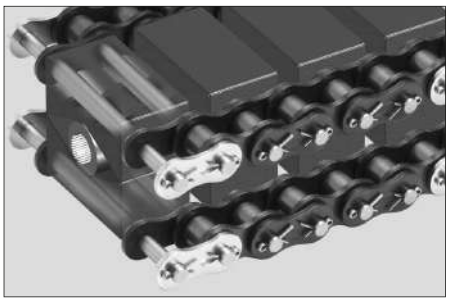
Stay-pin chain
(with blocks attached to the stay pins)

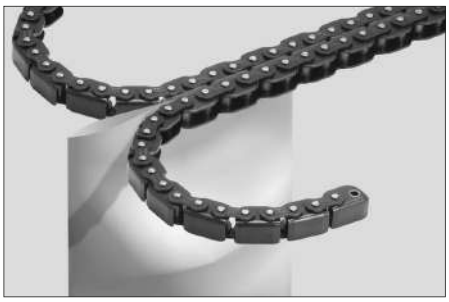
Chain with bent-over attachments

Lambda Snap Cover Chain (for Direct Conveyance)

Lambda Snap Cover Chain

Snap Covers can be attached to steel Lambda Chain for direct loading and conveyance.

- Higher maximum allowable load than RS plastic block chain (RS60-SC approximately seven times higher maximum allowable load than RSP60 chain). Ideal for long, heavy-load conveyors.
- Plastic covers protect goods from scratching.

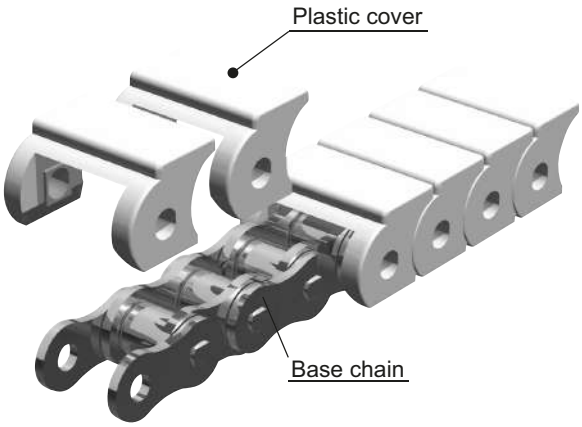

Plan View

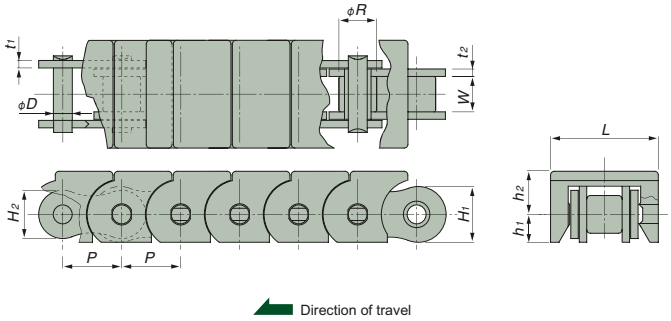

- The above diagram shows RS chain. The link plates for RF06B are flat.
- Offset links are not available

Features

1. High allowable load
   Snap Cover Chain has a higher allowable load than plastic block chain and so can convey heavy loads. It can also be driven by a single motor, even on long conveyors, for cost savings.

2. Plastic covers safe for goods and people
   The plastic covers prevent conveyed items from being scratched. Ideal for conveying cardboard boxes, wooden and plastic products, and so on. The plastic covers also cover the chain, which makes it much safer for workers.

Allowable Load Comparison with Plastic Block Chain

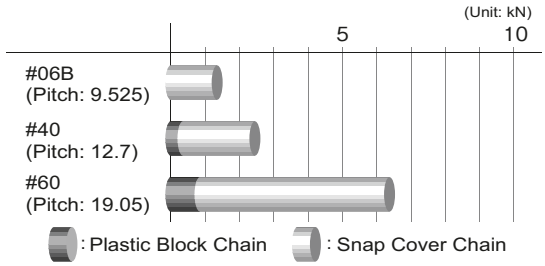

Plastic Cover Material

Standard series:	Polyacetal (white) – Base cover Polyacetal (blue) – Connecting link
Electro-conductive series:	Electro-conductive polyacetal (black) Used in applications where dust build-up from static, electrical noise, and sparks must be avoided. (Volume specific resistance: 1 x 106 Ω•cm)

Operating Temperature Range

-10 to 80°C

Maximum Allowable Speed

60m/min

Sprocket

- Use sprockets with 13T or more.
- RF06B is a BS chain and requires special sprockets.
- RS40 and RS60 chains can use Standard RS sprockets.However, there may be interference between the bottom of the plastic Snap Cover and the sprocket hub, depending on the number of teeth. When using a number of teeth shown in the chart below, further finish the hub outer diameter as indicated. A "-" indicates that no further finishing is needed.
  (No further finishing is needed for sizes not listed.)

Unit: mm

No. of Teeth	13	14	15	16	17	18	19	20	21	22	23
RS40	–	41	45	49	53	–	61	65	69	73	–
RS60	54										

*RF06B sprockets are made-to-order.

Lambda Snap Cover Chain (for Direct Conveyance)

Chain Dimensional Chart

Unit: mm

Tsubaki Chain No.	Pitch *P*	Roller Diameter *R*	Width Between Inner Link Plates *W*	Pin Diameter *D*	Plate				Plastic Cover					
					Thickness *t1*	Thickness *t2*	Height *H1*	Height *H2*	Height *h1*	Height *h2*	Width *L*	Max. Allowable Load kN {kgf}	Approx. Mass (kg/m)	No. of Links per Unit
RF06B-LMC-SC	9.525	6.35	5.72	3.28	1.0	1.27	8.2	8.2	4.2	7.6	17.5	1.47 { 150}	0.55	320
RS40-LMC-SC	12.70	7.92	7.95	3.97	1.5	1.5	12.0	10.4	6.2	9.3	23.5	2.65 { 270}	0.8	240
RS50-LMC-SC	15.875	10.16	9.53	5.09	2.0	2.0	15.0	13.0	7.7	11.8	29.0	4.31 { 440}	1.3	192
RS60-LMC-SC	19.05	11.91	12.70	5.96	2.4	2.4	18.1	15.6	8.5	13.7	35.0	6.28 { 640}	1.9	160
RS80-LMC-SC	25.40	15.88	15.88	7.94	3.2	3.2	24.1	20.8	11.5	18.0	42.5	10.7 {1090}	2.9	120
RS100-LMC-SC	31.75	19.05	19.05	9.54	4.0	4.0	30.1	26.0	14.7	21.3	49.5	17.1 {1740}	4.4	96

*Made-to-order product.

Model Numbering Example

RS40-LMC-SCA-JL

- Applicable chain size
- Lambda Series
- Snap Cover Chain
- Plastic cover material (Snap Cover Chain)
  - A: Standard (white)
  - E: Electro-conductive (black)
- Connecting link

Sample Order

Chain size=RS40
Chain type=Lambda Snap Cover Chain
Plastic cover material=A Qty.=100

Chain No.	Quantity	Unit
RS40-LMC-SCA	99	L
RS40-LMC-SCA-JL	1	K

*See the Tsubaki Top Chain catalog for more information on ordering.

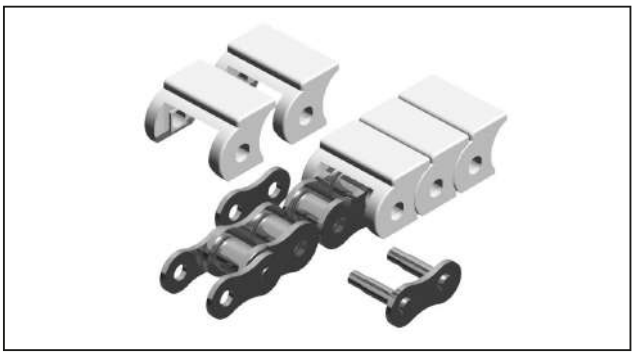

Connecting Link

Uses a special connecting link. Removing the connecting link plate allows the Snap Cover to be attached. Be advised that standard connecting links with cotter pins and spring clips cannot be used.

Lambda TN Snap Top Chain (for Direct Conveyance)

Lambda TN Snap Top Chain

Features top plates on a steel Lambda Chain for directly conveying goods.

- High allowable chain load makes it ideal for conveyors demanding high conveying performance.
- Top plates can be replaced.

Chain Visual Appearance

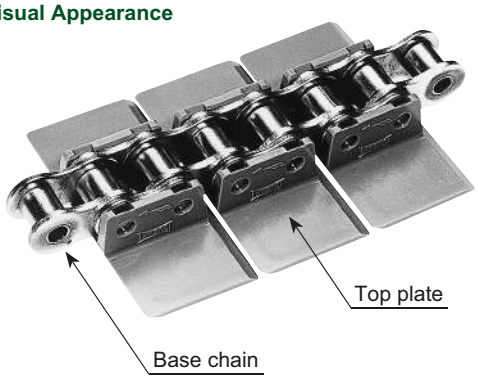

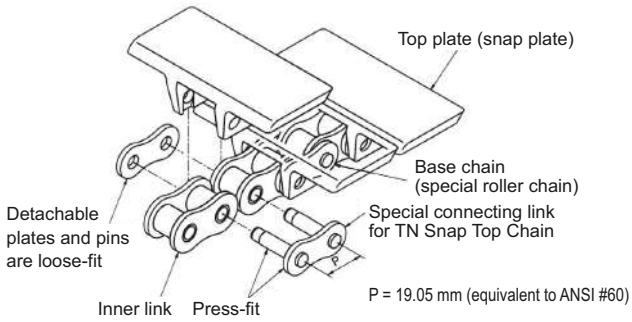

Construction

TN Top Chains consist of a base steel chain (RS60-LMC equivalent) and snap top plates.
The legs of the top plates are used to snap the plates onto the outer links of the base chain.

Top plate: The top plate is a cream-colored plastic.

Base chain: Equivalent to RS60-LMC (pin ends are different from standard drive chains), with the connecting link special to the TN series.

Connecting link: Does not use a cotter pin or clip. A connecting plate is attached to the top plate holes and press fitted.

Plan View

Base Chain

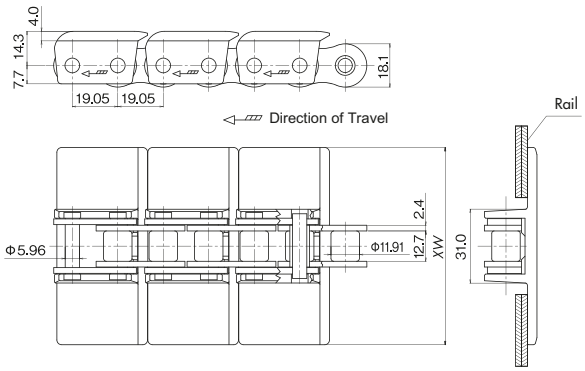

Connecting Link

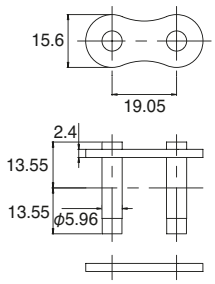

Rail/Sprocket Positioning

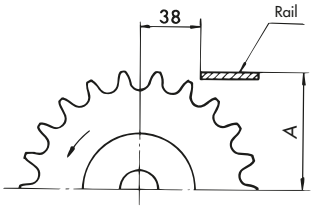

$$A = \frac{\text{Sprocket Pitch Dia.}}{2} + 11$$

Lambda TN Snap Top Chain (for Direct Conveyance)

Base Chain

	LMC-NP
Base chain number	TN-C-LMC-NP
Connecting link number	TN-C-LMC-NP-JL
Max. allowable load kN{kgf}	6.28 {640}

Top Plate

Top plate width *XW*	82.6	101.6	114.3	127.0	190.5
Chain number	TN826P	TN1016P	TN1143P	TN1270P	TN1905P
Approx. mass when connected kg/m	2.1	2.2	2.3	2.4	2.8
Top plate material	Polyacetal (gray)				

Notes: 1. Models in bold are stock items.
2. LFW, LFG, and LFB top plates are available. (Made-to-order products.)

Model Numbering Example

Base chain/connecting link

TN-C-LMC-NP-CL

Chain type

Base chain

"CL" for connecting link

Base chain series
Blank : Standard
NP : NP Series
LMC-NP: Lambda Series
SS: SS Series
K : K Series

Sample Order

When ordering TN Series Snap Top Chain with a Lambda base chain and 50 top plates.

Chain No.	Quantity	Unit
TN-C-LMC-NP	**99**	**L**
TN826P	**50**	**K**
TN-C-LMC-NP-JL	**1**	**K**

*Delivered in no. of units + fractions
No. of top plates=1/2 of base chain quantity
Order the base chain, connecting links, and top plates separately.
Indicate when the top plates do not need to be installed on the chain.
*See the Tsubaki Top Chain catalog for more information on ordering.

Base chain/connecting link

TN826P

Chain type

Top plate width
(826=82.6mm)

Top plate width
P: Standard

Be advised that the shape of top plates for the PC Series is different than for other series.

Specifying Chain Length

Be sure to specify chain length using the number of links in the base chain. TN top plates are attached only to the outer links of the base chain, which means that the number of links in the chain is twice the number of top plates. Also, note that the number of links for standard base chain length is 160. In other words, with a chain pitch of 19.05mm, standard length is 3,048mm.

Sprockets

RS60 sprockets can be used. BS sprockets can be used with 12T or more.

Lambda TS/TSA Stainless Steel Top Chain (for Direct Conveyance)

Lambda TS/TSA Stainless Steel Top Chain (for Direct Conveyance)

- Double Pitch Conveyor Chain with top plates. Can use sprockets for Double Pitch Chain.
- Available in heat-treated, hard chrome plated, and buffed top plates for improved wear resistance to meet your work and environment needs.

3D View

TS Series

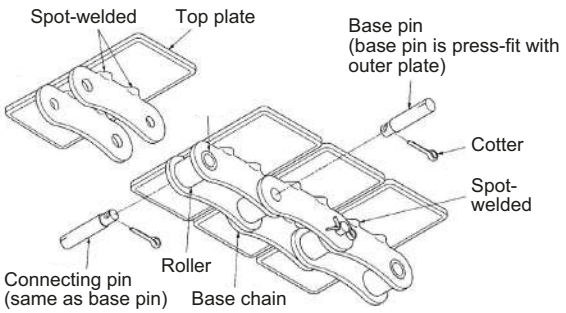

The inner link bushes and rollers have the same construction as a standard roller chain; i.e. they are loose fit. Bushes and inner plates are press fit.

Top plates are SUS430 (18Cr stainless steel), while the base chain is steel (for both TS and TSA Series).
Used mainly in single strands.

TSA Series

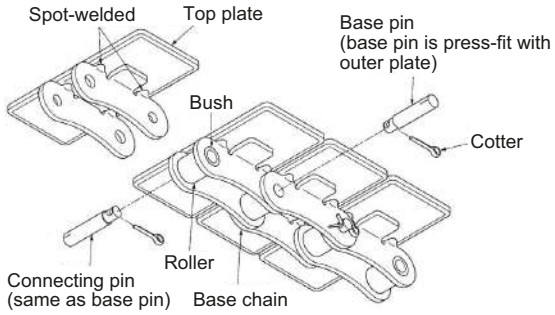

The inner link bushes and rollers have the same construction as a standard roller chain; i.e. they are loose fit. Bushes and inner plates are press fit.

Ideal for several strands to be used simultaneously.
Guides can be used with the attachment ends.

Plan View

TS Series

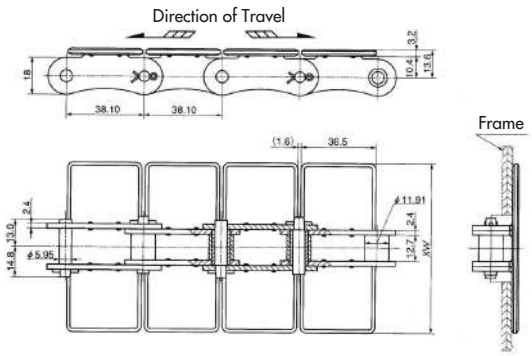

TSA Series

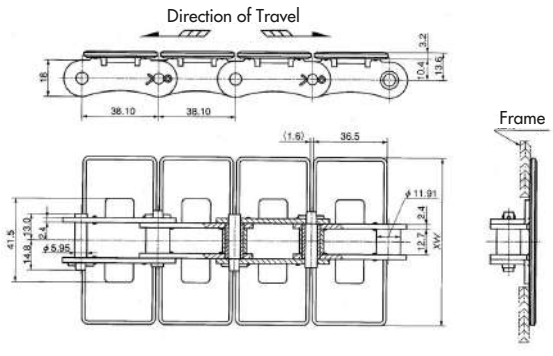

Offset Links (for both TS and TSA Series)

Offset Links

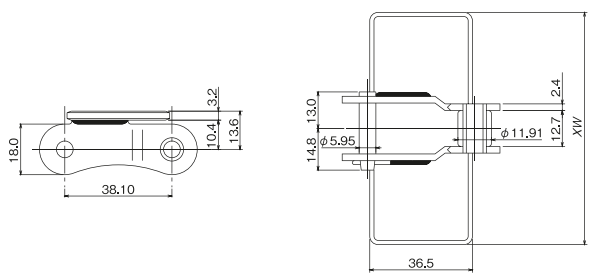

Sprockets

RF2060S sprockets (19T or more) can be used.

Lambda TS/TSA Stainless Steel Top Chain (for Direct Conveyance)

Chain Visual Appearance

TS Series

TSA Series

TS Series		TSA Series		Offset Link (both TS/TSA)	Top Plate Width *XW*
Max. Allowable Load kN{kgf} 2.94{300}	Approx. Mass kg/m	Max. Allowable Load kN{kgf} 2.94{300}	Approx. Mass kg/m		
TS550-LMC-NP	2.5	TSA550-LMC-NP	2.8	TS550-LMC-NP-OL	55.0
TS635-LMC-NP	2.7	TSA635-LMC-NP	3.0	TS635-LMC-NP-OL	63.5
TS762-LMC-NP	3.0	TSA762-LMC-NP	3.3	TS762-LMC-NP-OL	76.2
TS826-LMC-NP	3.2	TSA826-LMC-NP	3.5	TS826-LMC-NP-OL	82.6
TS950-LMC-NP	3.5	TSA950-LMC-NP	3.8	TS950-LMC-NP-OL	95.0
TS1016-LMC-NP	3.7	TSA1016-LMC-NP	4.0	TS1016-LMC-NP-OL	101.6
TS1100-LMC-NP	3.9	TSA1100-LMC-NP	4.2	TS1100-LMC-NP-OL	110.0
TS1143-LMC-NP	4.0	TSA1143-LMC-NP	4.3	TS1143-LMC-NP-OL	114.3
TS1270-LMC-NP	4.3	TSA1270-LMC-NP	4.6	TS1270-LMC-NP-OL	127.0
TS1524-LMC-NP	4.9	TSA1524-LMC-NP	5.2	TS1524-LMC-NP-OL	152.4
TS1905-LMC-NP	5.8	TSA1905-LMC-NP	6.1	TS1905-LMC-NP-OL	190.5

1. Made-to-order product.
2. No. of links per unit: 80

Chain Numbering Example

TS826-LMC-NP

- Chain type
- Top plate width (826=82.6mm)
- Base chain series LMC-NP: Lambda (base chain is NP Series)

Sample Order

Sample order
When ordering 100 links of lube-free TS Series Top Chain (plate width=82.6mm)

Chain No.	Quantity	Unit
TS826-LMC-NP	100	L

*Delivered in no. of units + fractions
*See the Tsubaki Top Chain catalog for more information on ordering.

Lambda Chain Selection

1. Lube Free Drive Chain Selection 48

Lambda Chain
Surface Treated Lambda Chain
X-Lambda Chain
KF Series Lambda Chain

2. Lube Free Small Size Conveyor Chain Selection 49

Lambda Double Pitch Chain
X-Lambda Double Pitch Chain
KF Series Lambda Double Pitch Chain
Lambda RS Attachment Chain
X-Lambda RS Attachment Chain
Lambda RF Roller Chain
Lambda Hollow Pin Chain
Lambda Plastic Roller Conveyor Chain
Lambda Chain with Side Rollers
Lambda Chain with Top Rollers

3. Lube Free Top Chain Selection 52

Lambda TN Snap Top Chain
Lambda TS/TSA Stainless steel Top Chain
Lambda Snap Cover Chain

Lambda Chain Handling

1. Cutting lube free drive chain 54
2. Cutting lube free conveyor chain 54
3. Cutting Lambda Plastic Roller Conveyor Chain 55
4. Cutting Lambda Chain with side rollers 56
5. Cutting Lambda Chain with top rollers 56
6. Cutting lube free Top Chain 57
7. Cutting Lambda Snap Cover Chain 57
8. Installing Curved Lambda Chain 57
9. Guiding Lambda Snap Cover Chain 58
10. Cutting tools 58

Selection (Lube-Free Drive Chain)

1. Lube-Free Drive Chain Selection

Select lube-free drive chain using selection methods based on kW ratings tables.

1-1. Kilowatt Ratings (See page 16 for tables)

Kilowatt ratings are dependent on the following factors:

1) Indoor environment with a temperature range of -10C to 60C and where no wear dust is present.
2) No corrosive gases, high humidity or other harmful elements are present.
3) The two sprocket transmission shafts are maintained parallel to each other and the chains are properly installed.
4) No possibility of exposure to chemicals, water, or cleaning/degreasing.
5) No significant load change during conveyance.

1-2. Operating Factors

As the drive capacity of the chain is subject to various application factors, the following table has been designed to rectify kilowatt changes in relation to load fluctuation.

Table 1: Operating Factors

Type of Impact	Power Source / Type of Machine	Motor or Turbine	Internal Combustion	
			Hydraulic Drive	Non-Hydraulic
Smooth Transmission	Belt conveyors with small load fluctuations, chain conveyors, centrifugal pumps, centrifugal blowers, general textile machinery, general machines with small load fluctuations	1.0	1.0	1.2
Small-impact Transmission	Centrifugal compressors, marine engines, conveyors with some load fluctuations, automatic furnaces, dryers, pulverizers, general machine tools, compressors, general construction machinery, general papermaking machines	1.3	1.2	1.4
Large-impact Transmission	Presses, crushers, construction and mining machines, vibration machines, oil-drilling rigs, rubber mixers, rolls, roll gangs, general machines with reverse or large impact loads	1.5	1.4	1.7

Step 1: Selection Factors

1) Type of machine
2) Type of impact
3) Power source
4) Kilowatt rating
5) Diameter and rpm of high-speed shaft (small sprocket)
6) Diameter and rpm of low-speed shaft (large sprocket)
7) Distance between shafts

Step 2: Determine Operating Factors

Use Table 1 to obtain the appropriate operating factors.

Step 3: Determine Corrected Kilowatt Value

Multiply the kilowatt rating value by the appropriate operating factor to obtain the corrected kilowatt value.

Step 4: Determine Chain and Small procket Teeth Number

Using the Kilowatt Rating Tables and referring to the rpm of the small sprocket, determine the appropriate chain and the number of teeth of the small sprocket that satisfy the corrected kilowatt value. For smoother chain drive, the smallest pitch chain with the required kW is recommended.
For double-strand LMD and LMD-H chain, multiply the multi-strand coefficient 1.4 for LMD and 1.7 for LMD-H by the kW ratings in the Kilowatt Rating Tables to determine the appropriate chain and the number of teeth of the small sprocket that satisfy the corrected kilowatt value and small-sprocket rpm.

Step 5: Determine Large Sprocket Teeth Number

The number of teeth for the large sprocket is determined by multiplying the number of teeth of the small sprocket by the speed ratio. A small sprocket with more than 15 teeth is recommended. However, the number of teeth on the large sprocket should be less than 120. By reducing the number of teeth on the small sprocket, the number of teeth on the large sprocket can be reduced. Even in this case though, the number of teeth on the small sprocket should not be reduced to less than 13.

Step 6: Confirm Shaft Diameter

After determining the number of teeth necessary for the small sprocket, refer to the RS Sprocket Dimension Table (separate catalog) to check if the sprocket diameter satisfies space limitations.

1-3. KF Series Lambda Drive Chain Selection

Corrected kW < kW ratings =
Catalog kW ratings x temperature coefficient

*KF Series is usable if the kW ratings are greater than the corrected kW.

・Select KF Series by multiplying the temperature coefficient of the operating environment found in Table 2 by the kW ratings.
Calculate the temperature coefficient as the maximum operating temperature of the equipment you are using. This selection method allows for strength drops from your operating temperature.

Table 2: Temperature Coefficient of Your Operating Environment

Temperature	RS40～RS80
Ambient temperature to 150°C	Catalog kW ratings x1
150°C～200°C	Catalog kW ratings x3/4
200°C～230°C	Catalog kW ratings x1/2

Notes: The maximum allowable load of double-strand Lambda Conveyor Chain (LMC) is roughly equal to only that of single-strand Lambda Drive Chain (LMD). When using LMC for drive purposes, please contact a Tsubaki representative beforehand.

2. Lube Free Small Size Conveyor Chain Selection

An appropriate chain size and type can be selected based upon the type and capacity of the conveyor. In some cases, it may be difficult to determine the most appropriate chain size and type, since there are a variety of operating conditions for the conveyor. The general procedure for chain selection is as follows:

Step 1: Check conveyance conditions
Step 2: Tentatively determine chain type
Step 3: Check allowable load of rollers and attachments
Step 4: Calculate maximum chain load
Step 5: Determine chain size

In this catalog, values are indicated in both SI and gravimetric units. The weight (kgf) used to calculate the max. load in the gravimetric units is the same value as the mass (kg).

Step 1: Check Conveyance Conditions

1) Type of conveyor (slat conveyor, bucket elevator, etc.)
2) Method of chain travel (horizontal, inclined, or vertical conveyor)
3) Type, mass, and size of materials to be conveyed
4) Conveyor capacity, interval between conveyed objects
5) Conveying speed
6) Conveyor length
7) Lubricated (yes/no)
8) Considerations for special environments (high/low temperature, presence of corrosive substances)

Lambda Chain operating temperature range: –10°C to 150°C
- Lambda Outboard Roller Chain, Lambda Top Roller Chain: –10°C to 80°C
- Lambda Plastic Roller Conveyor Chain: 0°C to 50°C

Step 2: Tentatively Determine Chain Type

SI Units

$$F(\text{kN}) = W \times f_1 \times K_V \times \frac{G}{1000} \qquad G = 9.80665\ \text{m/s}^2$$

{Gravimetric Units}

$$F(\text{kgf}) = W \times f_1 \times K_V$$

W_t : Total mass {weight} of conveyed objects (besides chain) kg {kgf}
f_m : Coefficient of friction (See page 51. For free-flow conveyors, see Table 5 f_2 and Table 6 f_3.)
K_V : Speed coefficient (See page 51)

Tentatively select a chain that has maximum allowable load of F (for two parallel strands, use F × 0.6) or more.

Step 3: Check Allowable Load

The load applied to rollers or attachments should not exceed the allowable loads shown in Table 1 and Table 2.

Table 1: Allowable Load of Base Chain Roller

Unit: kN {kgf}/roller

Chain Size	Steel Roller	
	R Roller	S Roller
RF2040, RF40, RS40	0.64 { 65}	0.15 {15}
RF2050, RF50, RS50	1.98 {100}	0.20 {20}
RF2060, RF60, RS60	1.57 {160}	0.29 {30}
RF2080, RF80, RS80	2.65 {270}	0.54 {55}
RF2100, RF100, RS100	3.92 {400}	0.78 {80}

Chain Size	Plastic Roller (R/F Roller)
RF03	0.49 {50}
RF05	0.83 {85}

Note: The material used for double-pitch R Roller guide rails should be a high-tensile-strength material at least S45C or better.

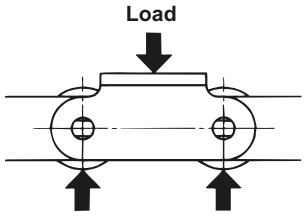

Allowable Roller Load

Table 2: Allowable Roller Load

Unit : kN {kgf}/roller

Chain Size	Engineering Plastic Outboard Roller	Engineering Plastic Top Roller
RF2040, RS40	0.05 { 5}	0.05 { 5}
RF2050, RS50	0.07 { 7}	0.07 { 7}
RF2060, RS60	0.10 {10}	0.10 {10}

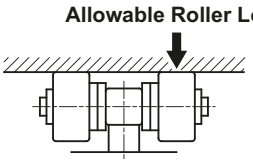

Plastic Outboard Roller

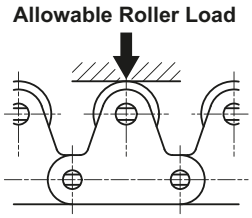

Single-Strand Top Roller

Explanation of Symbols (1)

F	: Max. static load acting on chain	kN {kgf}
V	: Conveying speed (chain speed)	m/min
H	: Center distance between sprockets (vertical direction)	m
L	: Center distance between sprockets (horizontal direction)	m
C	: Center distance between sprockets	m
M	: Mass {weight} of moving parts (chain, bucket, apron, etc.)	kg/m {kgf/m}
W	: Total mass {weight} of conveyed objects on conveyor (max. value)	kg {kgf}

For countable items:

$$W = \frac{C}{\text{Loading interval}} \times \text{Mass \{weight\} of conveyed items}$$

η : Transmission efficiency of drive unit
kW : Power required
f_1 : Coefficient of friction between chain and guide rail (Table 3)
G : Acceleration of gravity: 9.80665 m/s²

Do not use Lambda Chain where there is the possibility of exposure to chemicals, water, or wash down/degreasing.

Selection (Lube Free Small Size Conveyor Chain)

Step 4: Calculate Max. Chain Load (F)

1) Horizontal Conveyance

1-1) Goods are directly loaded on the conveyor

SI Units

$$F = (W+2.1M \cdot C)\ f_1 \times \frac{G}{1000}$$

$$kW = \frac{F \cdot V}{60} \times 1.1 \times \frac{1}{\eta}$$

{Gravimetric Units}

$$F = (W+2.1M \cdot C)\ f_1$$

$$kW = \frac{F \cdot V}{6120} \times 1.1 \times \frac{1}{\eta}$$

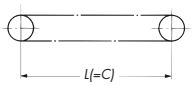

Explanation of symbols (1): Previous page

1-2) Goods are accumulated (free-flow conveyors)

SI Units

$$F = \{(W_1+M)\ L_1 \cdot f_1 + W_2 \cdot L_2 \cdot f_2 + (W_2+M)\ L_2 \cdot f_3 + 1.1M\ (L_1+L_2)\ f_1\} \times \frac{G}{1000}$$

$$kW = \frac{F \cdot V}{54.5} \times 1.1 \times \frac{1}{\eta}$$

{Gravimetric Units}

$$F = (W_1+M)\ L_1 \cdot f_1 + W_2 \cdot L_2 \cdot f_2 + (W_2+M)\ L_2 \cdot f_3 + 1.1M\ (L_1+L_2)\ f_1$$

$$kW = \frac{F \cdot V}{5565} \times 1.1 \times \frac{1}{\eta}$$

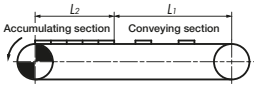

Explanation of symbols (2): Next page

2) Vertical Conveyance

SI Units

$$F = (W+M \cdot C) \times \frac{G}{1000}$$

$$kW = \frac{W \cdot V}{54.5} \cdot \frac{G}{1000} \times 1.1 \times \frac{1}{\eta}$$

{Gravimetric Units}

$$F = W+M \cdot C$$

$$kW = \frac{W \cdot V}{5565} \times 1.1 \times \frac{1}{\eta}$$

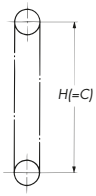

Explanation of symbols (1): Previous page

3) Inclined Conveyance*

3-1) Goods are directly loaded on the conveyor

SI Units

$$F = \left\{(W+M \cdot C)\frac{L \cdot f_1+H}{C} + 1.1M\ (L \cdot f_1-H)\right\} \times \frac{G}{1000}$$

$$kW = \frac{V}{60}\left\{F-M\ (H-L \cdot f_1)\frac{G}{1000}\right\} \times 1.1 \times \frac{1}{\eta}$$

{Gravimetric Units}

$$F = (W+M \cdot C)\frac{L \cdot f_1+H}{C} + 1.1M\ (L \cdot f_1-H)$$

$$kW = \frac{V}{6120}\{F-M\ (H-L \cdot f_1)\} \times 1.1 \times \frac{1}{\eta}$$

Explanation of symbols (1): Previous page

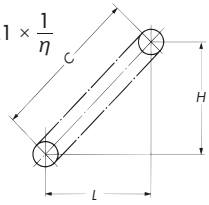

4) Horizontal/Inclined Conveyance*

4-1) Goods are directly loaded on the conveyor

SI Units

$$F = \left\{\left(\frac{W}{C_1+C_2}+2.1M\right) C_1 \cdot f_1 + \left(\frac{W}{C_1+C_2}+M\right)(L_1 \cdot f_1+H) + 1.1M\ (L_1 \cdot f_1-H)\right\} \times \frac{G}{1000}$$

$$kW = \frac{V}{60}\left\{F-M\ (H-L_1 \cdot f_1)\frac{G}{1000}\right\} \times 1.1 \times \frac{1}{\eta}$$

{Gravimetric Units}

$$F = \left(\frac{W}{C_1+C_2}+2.1M\right) C_1 \cdot f_1 + \left(\frac{W}{C_1+C_2}+M\right)(L_1 \cdot f_1+H) + 1.1M\ (L_1 \cdot f_1-H)$$

$$kW = \frac{V}{6120}\{F-M\ (H-L_1 \cdot f_1)\} \times 1.1 \times \frac{1}{\eta}$$

Explanation of symbols (1): Previous page

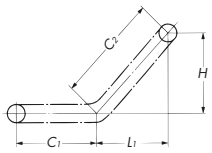

* When calculating the value for F, if $L \cdot f_1-H<0$, make $L \cdot f_1-H=0$. Also when calculating the value for kW, if $H-L \cdot f_1<0$, make $H-L \cdot f_1=0$.

Selection (Lube Free Small Size Conveyor Chain)

Explanation of Symbols (2)

When Accumulating Objects (Free Flow Conveyor)

F	: Max. static load acting on chain	kN {kgf}
V	: Chain speed	m/min
L_1	: Length of conveying section	m
W_1	: Mass of conveyed objects in conveying section	kg/m
L_2	: Length of accumulating section	m
W_2	: Mass of conveyed objects in accumulating section	kg/m
M	: Mass of moving parts	kg/m
η	: Transmission efficiency of drive unit	
kW	: Power required	
f_1	: Coefficient of friction between chain and rail during conveyance (Table 4)	
f_2	: Coefficient of friction between chain and conveyed objects during accumulation (Table 5)	
f_3	: Coefficient of friction between chain and rail during accumulation (Table 6)	

Table 3-1: f_1: Coefficient of Rolling Friction

Roller Type	Steel Roller
R Roller	0.08
S Roller	0.14

Table 3-2: f_1: Coefficient of Sliding Friction

Steel Plate	
Dry	Lubricated
0.3	0.2

Table 3-3: f_1: Coefficient of Rolling Friction (Lambda Plastic Roller Conveyor Chain)

Roller Type	Plastic Roller
R Roller	0.07
S Roller	

Table 4: f_1: Coefficient of Friction Between Chain and Rail During Conveyance

Chain Type	Base Chain Roller Type		f_1
Lambda Outboard Roller Chain	Steel Roller	R Roller	0.08
Lambda Top Roller Chain		S Roller	0.14

Table 5: f_2: Coefficient of Friction Between Chain and Conveyed Objects During Accumulation

Chain Type	Transfer Roller Type	f_2
Lambda Outboard Roller Chain	Plastic Outboard Roller	0.06
	Outboard Roller with Plastic Brake	0.10
Lambda Top Roller Chain	Plastic Top Roller	0.06

Table 6: f_3: Coefficient of Friction Between Chain and Rail During Accumulation

f_3	Same as f_1

Step 5: Determine Chain Size

Multiply the maximum load (F) acting on the chain by the speed coefficient (K) given in Table 7 to select a chain that satisfies the following formula:

$$F \times K \leqq \text{Max. Allowable Load}$$

For two parallel strands, use max. load of 0.6F.

Table 7: Speed Coefficient (K)

Chain Speed (m/min)	Speed Coefficient (K)
15 or less	1.0
15 to 30	1.2
30 to 50	1.4
50 to 70	1.6
70 to 90	2.2
90 to 110	2.8
110 to 120	3.2

Table 8-1: Max. Allowable Load Unit: kN {kgf}

Chain Type	RS35	RS40 RF2040 RF40	RS50 RF2050 RF50	RS60 RF2060 RF60	RS80 RF2080 RF80	RS100 RF2100 RF100
Lambda RS Attachment Chain Lambda Double Pitch Chain Lambda RF Roller Chain	1.52 {155}	2.65 {270}	4.31 {440}	6.28 {640}	10.7 {1090}	17.1 {1740}
Lambda Hollow Pin Chain	—	1.47 {150}	2.55 {260}	3.43 {350}	6.18 {630}	—

Table 8-2: Max. Allowable Load of Free Flow Chain Unit: kN {kgf}

Chain Type	Type of Base Chain Roller	RS40 RF2040	RS50 RF2050	RS60 RF2060
Lambda Outboard Roller Chain	Steel Roller	2.65 {270}	4.31 {440}	6.28 {640}
Lambda Top Roller Chain	Steel Roller			

Table 8-3: Max. Allowable Load of Lambda Plastic Roller Conveyor Chain Unit: kN {kgf}

Tsubaki Chain No. \ No. of Sprocket Teeth	6	7	8	9	10
RF03075	1.47{150}	1.86{190}	1.96{200}	1.96{200}	1.96{200}
RF03100	1.86{190}	1.96{200}	1.96{200}	1.96{200}	1.96{200}
RF05100	2.65{270}	3.33{340}	4.21{430}	5.20{530}	5.20{530}
RF05125	3.74{380}	4.71{480}	5.20{530}	5.20{530}	5.20{530}
RF05150	4.90{500}	5.20{530}	5.20{530}	5.20{530}	5.20{530}

Note: The table above shows max. allowable load for R Rollers with a chain speed of 25 m/min or less. Max. allowable load for F Rollers is 70% of the above values.

Selecting KF Series Lambda Small Size Conveyor Chain

- Select lube-free small size conveyor chain by comparing the load acting on the chain to the maximum allowable load.

Chain load < chain max. allowable load =
Catalog max. allowable load x temperature coefficient

*KF Series is usable if the kW ratings are greater than the chain max. allowable load.

- Select KF Series by multiplying the temperature coefficient of the operating environment found in Table 9 by the max. allowable load.Calculate the temperature coefficient as the maximum operating temperature of the equipment you are using. This selection method allows for strength drops from your operating temperature.
- Chain speed should be less than the allowable speed.
- See the section on selection in the Tsubaki Small Size Conveyor Chain catalog for more information.

Table 9 Temperature Coefficient of Your Operating Environment

Temperature	RS40～RS80・RF2040～RF2080
Ambient temperature to 150℃	Catalog kW ratings x1
150℃～200℃	Catalog kW ratings x3/4
200℃～230℃	Catalog kW ratings x1/2

3. Lube Free Top Chain Selection

3-1. TN/TS Series Top Chain Selection

Follow the procedure below to select the top chain and wearstrip that are most economical and suitable for your application.

Step 1: Establish operating conditions
Step 2: Select top plate material
Step 3: Select wearstrip material
Step 4: Determine coefficients
Step 5: Select top plate width
Step 6: Calculate chain load
Step 7: Determine chain size

In this catalog, values are indicated in both SI and gravimetric units. The weight (kgf) used to calculate the max. load in the gravimetric units is the same value as the mass (kg).

Step 1: Establish Operating Conditions

A) Conveyed Objects
1) Container material
2) Mass
3) Dimensions

B) Conveyor Arrangement
1) Straight or side flexing
2) Conveyor length
3) Conveyor layout
4) Space limitations

C) Conveying Conditions
1) Conveying capacity
2) Interval/spacing between objects to be conveyed
3) Conveying speed
4) Lubrication
5) Whether objects are kept in accumulation or not

D) Environment
1) Temperature Range
TS: -10°C to 150°C
TN: -10°C to 80°C
2) Avoid exposure to chemicals, water, or cleaning/degreasing
3) Avoid abrasive conditions including the presence of glass fragments, paint chips, metal powder, sand, etc.

Step 2: Select Top Plate Material

Choose a suitable top plate material according to the type of objects to be conveyed.

Table1: Plate Material Selection Guide

Conveyed Objects	Top Plate Material	No Lube Abrasives No	No Lube Abrasives Yes
Tin cans, aluminum cans, steel cans, metallic foil containers (beer cans, soft drink cans, cans having metal tops and bottoms and fiber sides, etc.)	Polyacetal	A	×
Industrial parts (machine parts, dies, castings, forgings, metals, bearings, bolts, nuts, etc.)	Stainless Steel	B	A
Plastics and plastic-covered containers, paper containers (for candies, confections, milk products such as milk, cheese and ice cream, etc.; includes paper board containers and those with paper bottoms such as those for soap and cereal)	Polyacetal	B	×
	Stainless Steel	A	A
Glass bottles, glass products, ceramics (glass bottles and glass containers for liquors, foodstuffs, pharmaceuticals, cosmetics, etc.)	Polyacetal	B	×
	Stainless Steel	A	A

A: Most Recommended B: Acceptable ×: Inappropriate

Step 3: Select Wearstrip Material

Choose a suitable wearstrip material according to the type of top plate material.

Table 2: Wearstrip Material Selection Guide

Top Plate Material (Chain Type)	Wearstrip Material	No Lube Abrasives No	No Lube Abrasives Yes
Stainless Steel (straight-running TS)	Stainless Steel	B	B
	Steel	B	A
	UHMWPE	A	×
Polyacetal (straight-running TN)	Stainless Steel	B	B
	Steel	A	×
	UHMWPE	B	A

A: Most Recommended B: Acceptable ×: Inappropriate

Step 4: Determine Coefficients (f_1, f_2)

Table 3: Coefficient of Friction Between Top Plate and Wearstrip (f_1)

Top Plate Material	Lubrication	Wearstrip Material and Coefficient of Dynamic Friction: Stainless Steel	Steel	UHMWPE
Stainless Steel	No lube	0.35	0.35	0.25
Polyacetal	No lube	0.25	0.25	0.25

Table 4: Coefficient of Friction Between Conveyed Objects and Top Plate (f_2)

Conveyed Material	Lubrication	Top Plate Material and Coefficient of Dynamic Friction: Stainless Steel	Polyacetal
Plastics, paper containers, film-wrapped goods	No lube	0.35	0.25
Cans (with metal top and bottom)	No lube	0.35	0.25
Glass bottles, ceramics	No lube	0.25	0.22
Industrial parts (metal)	No lube	0.35	0.25

Step 5: Select Top Plate Width

Generally, the top plate must be slightly wider than the objects being conveyed. When objects are very wide and none of the top plate widths are satisfactory, top plates of the same width may be used in multi-strand arrangement.

Step 6: Calculate Max. Chain Load (F)

1) Calculating F

SI Units $F = \{(W + 2.1M)\,Lf_1 + WL'\,f_2 \times \frac{G}{1000}$

{Gravimetric Units} $F = (W + 2.1M)\,Lf_1 + WL'\,f_2$

2) Calculating Power Required

SI Units $kW = \frac{F \cdot V}{54.5} \times 1.1 \times \frac{1}{\eta}$

{Gravimetric Units} $kW = \frac{F \cdot V}{5565} \times 1.1 \times \frac{1}{\eta}$

F	: Max. load acting on chain	kN {kgf}
W	: Mass of conveyed objects	kg/m
M	: Chain mass	kg/m
L	: Length of conveyance (center distance between sprockets)	m
L'	: Length of accumulating section (zero when no slipping between conveyed objects and chain)	m
f_1	: Coefficient of friction between top plate and wearstrip	(Table 3)
f_2	: Coefficient of friction between conveyed objects and top plate	(Table 4)
K	: Speed coefficient	(Table 5)
V	: Chain speed	m/min
η	: Transmission efficiency of drive unit	
kW	: Power required	
G	: Acceleration of gravity : 9.80665 m/s^2	

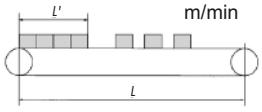

Selection (Lube Free Top Chain)

Step 7: Determine Chain Size

Multiply the maximum load (F) acting on the chain by the speed coefficient (K) given in Table 5 for a chain that satisfies the following formula:

$$F \times K \leqq \text{Max. Allowable Load}$$

When the maximum allowable load is insufficient, it can be corrected by using top plates with narrower width and increasing the number of chain strands, or by splitting it into several shorter conveyors.

Table 5: Speed Coefficient (K)

Chain Speed (m/min)	Speed Coefficient (K)
15 or less	1.0
15 to 30	1.2
30 to 50	1.4
50 to 70	1.6
70 to 90	2.2
90 to 110	2.8
110 to 120	3.2

3-2. Selecting Lambda Snap Cover Chain

Step 1: Check Maximum Allowable Load of Snap Covers

Make certain that the load applied per link is within the maximum allowable load indicated in Table 1.

Table 1: Allowable Load of Snap Cover

Unit: kN {kgf}/pitch

	RF06B-SC-LMC	RS40-SC-LMC	RS50-SC-LMC	RS60-SC-LMC	RS80-SC-LMC	RS100-SC-LMC
Allowable Load	0.03{3}	0.05{5}	0.07{7}	0.1{10}	0.15{15}	0.25{25}

Step 2: Calculate Chain Load

F	: Max. load acting on chain	kN {kgf}
$m1$	: Mass of conveyed objects	kg/m
$m2$	: Chain mass	kg/m
S	: Length of conveyance (center distance between sprockets)	m
S'	: Length of accumulating section	m
$\mu 1$	: Coefficient of friction between chain and guide rail (carry way)	(Table 2)
$\mu 2$	: Coefficient of friction between chain and guide rail (return way)	(Table 3)
$\mu 3$	: Coefficient of friction between conveyed objects and chain (carry way)	(Table 4)
P	: Power required	kW
V	: Chain speed	m/min
K	: Speed coefficient	(Table 5)
η	: Transmission efficiency of drive unit	
G	: Acceleration of gravity: 9.80665 m/s^2	

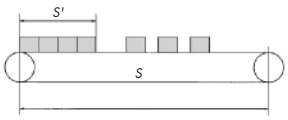

Table 2: $\mu 1$=Coefficient of Rolling Friction Between Chain and Guide Rail (Carry Way)

μ=0.14
(Confficient of rolling friction)

Table 3: $\mu 2$=Coefficient of Sliding Friction Between Chain (Plastic Cover) and Guide Rail (Return Way)

Plastic Cover Material	Guide Rail Material	
	Stainless Steel, Steel	UHMWPE
Standard Type, Electroconductive Type	0.25	0.25

Note: Without lubrication

Table 4: Coefficient of Sliding Friction Between Conveyed Goods and Chain (Plastic Cover) ($\mu 3$)

Plastic Cover Material	Conveyed Material					
	Steel Cans, Aluminum Cans	Paper Packages	Glass Bottles	Plastic Containers	Industrial Parts (Metal)	Industrial Parts (Metal)
Standard Type, Electroconductive Type	0.25	0.30	0.22	0.25	0.25	0.25

Note: Without lubrication

Table 5: Speed Coefficient (K)

Chain Speed (m/min)	Speed Coefficient (K)
15 or less	1.0
15 to 30	1.2
30 to 50	1.4
50 to 60	1.6

SI Units

$$F = \{ (m1 + m2)\, S\mu 1 + 1.1m2 \cdot S\mu 2 + m1 \cdot S'\mu 3 \} \cdot G/1000$$

{Gravimetric Units}

$$F = \{ (m1 + m2)\, S\mu 1 + 1.1m2 \cdot S\mu 2 + m1 \cdot S'\mu 3 \}$$

Step 3: Determine Usability

Multiply the maximum load (F) acting on the chain by the speed coefficient (K) given in Table 5 for a chain that satisfies the following formulas:

One strand of chain: $F \cdot K \leqq$ Max. Allowable Load
Two strands of chain: $0.6F \cdot K \leqq$ Max. Allowable Load

Step 4: Calculate Power Required

SI Units

$$P = F \cdot V / (54.5 \cdot \eta)$$

{Gravimetric Units}

$$P = F \cdot V / (5565 \cdot \eta)$$

*See pg. 58 for installation and guide methods.

Lambda Chain Handling

1. How to Disassemble Lube Free Roller Chain

Roller Chains are generally sold in one unit sections (1 unit = 3,048 mm). Configuring chain to a specific length will require disassembling units.

1.1 Firmly lock the chain in a chain vise. Using a grinder, grind down the ends of the two pins on the outer link (on the same side) until they are level with the link plate. Take care that the grinder does not overheat.

1.2 Use a dedicated cradle and an RS Roller Chain punch to disassemble the chain. Using a primary punch suitable for the chain size, place the punch on the head of the pin that was ground down and strike with a hammer. Be sure to strike the pins on the outer link alternately to remove them evenly and at the same time. Strike the pins until they are just about to release from the outer plate.

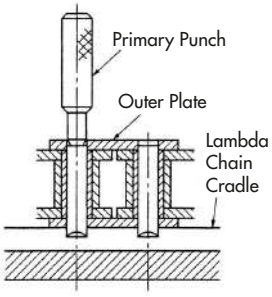

Figure 1: Tapping Pin with Primary Punch

1.3 Using a secondary punch and a hammer, completely remove the pair of pins from the outer plate. Check that the bush of the removed pins has not come loose from the inner plate. If the bush has come loose, do not continue to use it.

1.4 When removing the pins, lightly tap them alternately, taking due care not to damage the bush.

⚠ Safety Points

1. Use the grinder to grind down only the riveted portion of the pin head. Removing the pin without grinding the riveted head off will require additional time and effort, and may damage the chain.
2. Do not re-use pins and plates removed from the chain.
3. Wear clothing appropriate for cutting chain.

2. How to Disassemble Lube Free Small Size Conveyor Chain

2.1 Grind the Riveted Pin

Using a grinder, grind down the ends of the two pins on the outer link (on the attachment side) until they are level with the outer plate. Take care that the grinder does not overheat (see Figures 2 and 3). Particularly in the case of Lambda Chain, work on the chain slowly so that the oil-impregnated bushes do not become too hot.

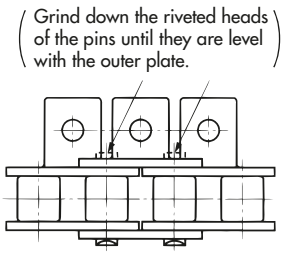

Figure 2: Attachment Chain

Figure 3: Grinding Down Pin Ends

2.1 Set the Chain on a Vise and Cradle

2.2.1 S Roller (A, SA, EP, GNK1 Attachments)

Place the chain in the jaws of the vise with the attachment side facing up and gently tighten the vise to secure the chain (Figures 4 and 5).

Figure 4: Setting Chain in Chain Vise

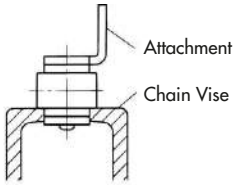

Figure 5: Cross Section of Chain Set in Chain Vise

2.2.2 S Roller (K, SK Attachments), R Roller (K, SK Attachments)

For these types, the chain is set in a cradle (Figure 6-1). Another method, used only for steel S Rollers (Figure 6-2), is to set the pin to be removed on the edge of the chain vise.

Whichever method is used, support blocks should be placed under the chain on either side of the vise to ensure that the chain remains stable (Figure 7).

Any attachment can be disassembled using this method. However, more force will be required to remove the pin as mentioned in “2.3 Pin Removal” on the next page.

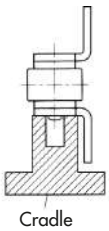

Figure 6-1: Cradle Cross Section

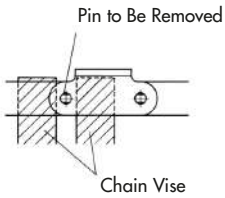

Figure 6-2: Chain Vise Usage

Lambda Chain Handling

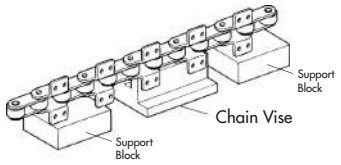

Figure 7: Cradle and Support Blocks

2.2.3 R Roller (A, SA, EP Attachments)

Secure the non-attachment side plate of the chain in the vise and support the R Rollers on the vise (Figure 9). Ensure that the chain is supported on both sides of the vise (Figure 8).

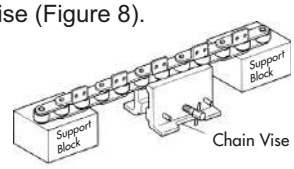

Figure 8: Chain Vise and Support Blocks

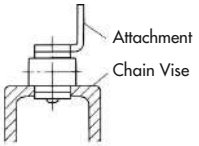

Figure 9: Cross Section of Chain Set in Chain Vise

2.3 Pin Removal

1) Using a primary punch suitable for the chain size, place the punch on the head of the pin that was ground down and strike with a hammer. Be sure to strike the pins on the outer link alternately to remove them evenly and at the same time. Strike the pins until they are just about to release from the outer plate (Figure 10).

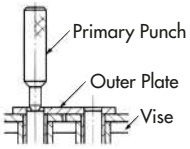

Figure 10: Tapping Pin with Primary Punch

2) Using a secondary punch and a hammer, completely remove the pair of pins from the outer link. Check that the bush of the removed pins has not come loose from the inner plate. If the bush has come loose, do not continue to use it.

3. How to Disassemble Lambda Plastic Roller Conveyor Chain

3.1 T-Pin Removal

Using the T-Pin Bending Tool, straighten the T-pin and remove it.

Figure 11: Straightening T-Pin

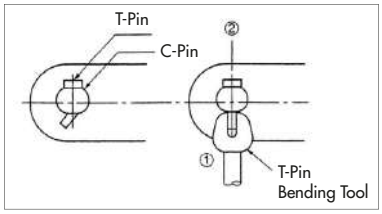

In the case of small-size chain, a monkey wrench can be used to straighten the pin.

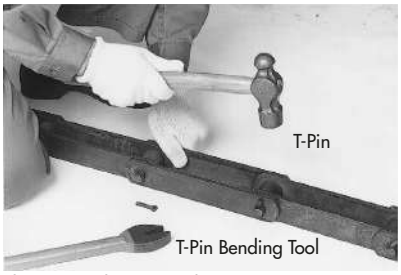

Photo: Straightening and removing T-pins

3.2 Alternately Striking C-Pins

1) These instructions are for removing the plate on the T-pin side.
2) The two C-pins remain inserted in the other outer plate.
3) As shown in the photo, using a tool to hold and support the inner link, alternately strike the C-pins on the T-pin side with a hammer.

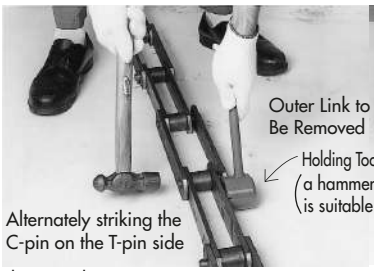

Photo: Striking one pin

Photo: Striking the other pin

3.3 Outer Link Removal

Remove the outer plate and the outer link with the two C-pins connected.

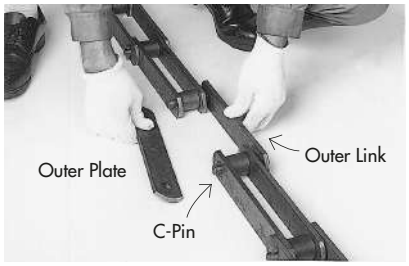

Note: The chain in the above photos is not the actual Lambda Plastic Roller Conveyor Chain.
Caution: When working on the chain, make sure that the plastic rollers suffer no shocks or impact, as these could lead to roller breakage.

⚠ Safety Points

- Work on the chain only in conditions where there is no load on the chain. For any chain set-up, vertical, horizontal or diagonal, the chain must be kept so as to have no tension around the area to be cut (using chain blocks or wire).
- To prevent any problems arising with the chain, do not perform any additional processing on the chain, especially around the plate holes and pins.
- Be sure to wear safety glasses when striking the C-pins with a hammer so as to prevent injury from flying metal fragments.

Lambda Chain Handling

4. How to Disassemble Lambda Outboard Roller Chain

4.1 When the Base Chain Roller Is an S Roller

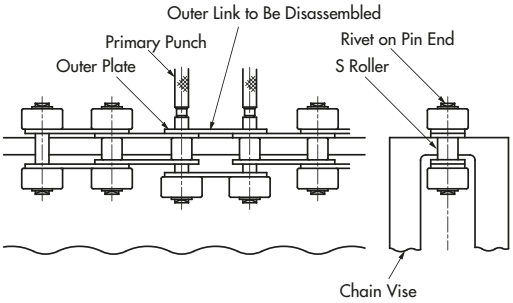

Figure 12: Setting S Roller Chain

1) Determine the outer link to be disassembled and mark the link for identification.
2) Set the chain on a chain vise (sold separately) as shown in Figure 12 and shear off the rivets on the pin ends (two rivets on one side) using a hand grinder. Take care that the grinder does not overheat.
3) Remove the two pins using a pin with a diameter slightly smaller than the pin diameter of the chain (using a Tsubaki Primary Punch or its equivalent). When the pins are pulled out a little, the two outboard rollers on the upper side can be removed. (Figure 12 shows the outboard rollers being removed.)
4) Directly tap the pin with a small hammer until the end of the pin reaches the upper face of the outer plate to remove. Tap the two pins alternately to ensure they come off evenly. Use caution not to damage the outboard rollers on the right and left.
5) Tap and pull out the two pins using a primary punch until the outer plate on the upper side can be removed.

4.2 When the Base Chain Roller Is an R Roller

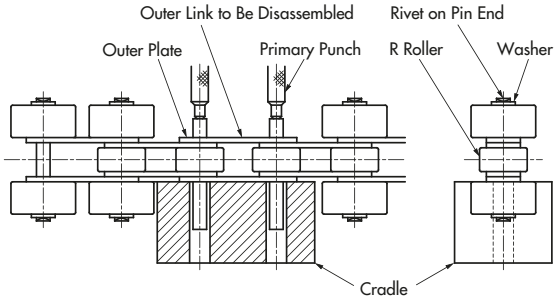

Figure 13: Setting R Roller Chain

1) Determine the outer link to be disassembled and mark the link for identification.
2) Shear off the rivets on the pin ends (four rivets) using a hand grinder so as to remove the four outboard rollers. In doing so, shear down to the washers with the grinder to remove the washers. Take care that the grinder does not overheat.
3) Remove the four outboard rollers. (Receive the outboard roller on the cradle, apply the punch on the pin end face, and tap the pin out until the washer is removed. Follow the same procedure to remove the washers on the other side.)
4) Set the chain on the cradle as shown above and remove the two pins by tapping the punch with a hammer. Prepare a cradle yourself as appropriate.
5) Follow steps 4) and 5) of 4. 1.
6) If outboard rollers are spaced every two or more links, the rivet parts to be sheared off will differ from those shown in the above diagram. (See Figure 14.)

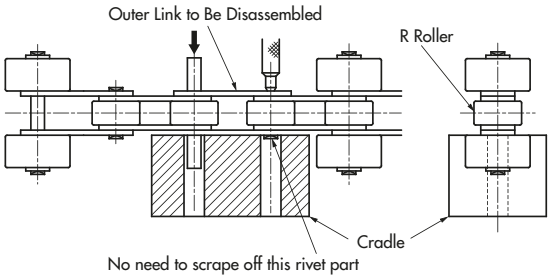

Figure 14: Removing the Pins

5. How to Disassemble Lambda Top Roller Chain

1) Mark the outer link to be disassembled for identification.

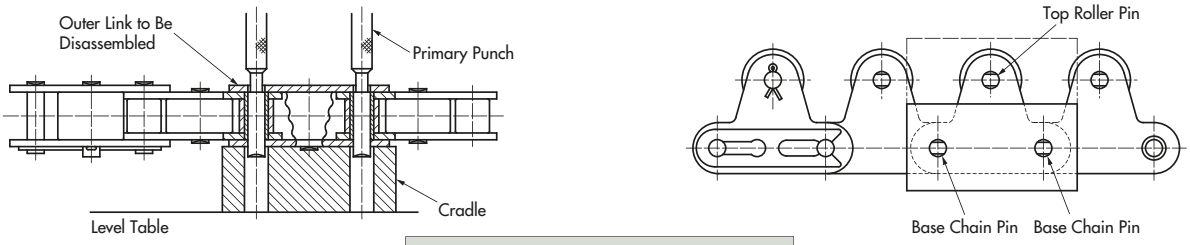

Figure 15: Removing Base Chain Pins

Lambda Chain Handling

2) Shear off the rivets on the base chain pin ends and top roller pin ends using a hand grinder or other means (three rivets on one side of the chain). Take care that the grinder does not overheat.
3) Turn the chain side that was grounded by the grinder upward and set the chain on a cradle, as shown in Figure 15. Prepare a cradle yourself as appropriate. To remove the three pins including the top roller pin at the same time, prepare a cradle integrating the part shown by the phantom line.
4) Tap the primary punch (or its equivalent) with a hammer until the two (three) pins are removed from the outer plate (up to the position shown in Figure 15.)
5) Change the setting of the cradle as shown in Figure 16 to remove the top roller pin. (When top rollers are not attached to the outer link, this procedure is not necessary.)
6) Remove the top roller pin by repeating step 4).

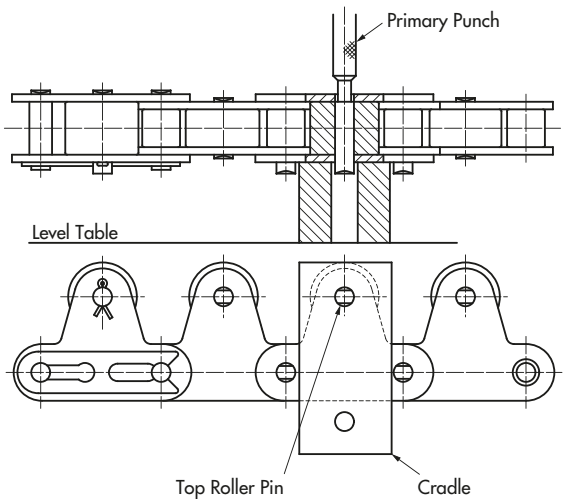

Figure 16: Removing Top Roller Pins

6. How to Disassemble Lube Free Top Chain

6.1 TS/TSA Series Lambda Stainless Steel Top Chain

The chain can be disassembled from anywhere on the chain. The pins should be removed from the cotter pin side.

6.2 TN Series Lambda Stainless Steel Top Chain

The pin of the connecting link is loosely fitted in the connecting plate. For sections other than the connecting parts, push out the pair of pins parallel to one another by means of a punch and a hammer. (The pins are not riveted.)

7. How to Disassemble Lambda Snap Cover Chain

7.1 Plastic Covers

The plastic cover can be detached using a screwdriver. When attaching the plastic cover, attach the cover in the base chain firmly.

7.2 Disassembling the Base Chain

For riveted roller chain, use a hand grinder to remove the riveted ends of the two pins (on the same side) of the outer link to be disassembled. Be careful not to overheat the chain when performing the grinding operation. For Lambda Chain, work especially slowly so as not to heat the oil-impregnated bushes.

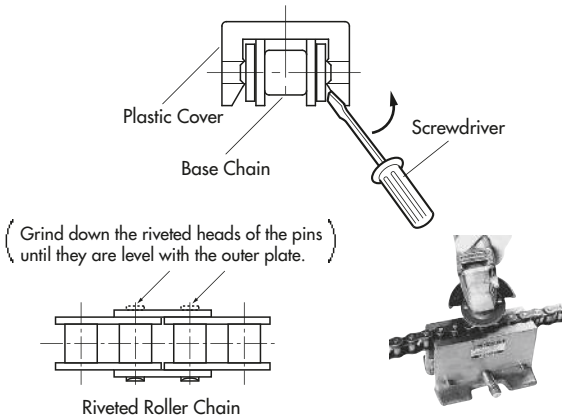

8. Installing Curved Lambda Chain

8.1 Installing the Guide

Compared to RS Roller Chain, Curved Lambda Chain has larger play between the pins and bushes, providing a greater degree of freedom. Be sure to install a guide on the chain so that it engages straight onto the sprocket.

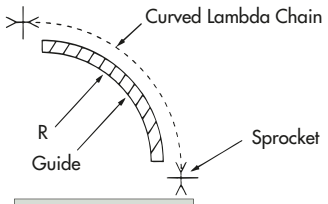

Figure 19: Guide

8.2 Minimum Horizontal Bending Radius (r)

Manufacture the guide so that its curve radius is equal to or greater than the minimum horizontal bending radius shown below.

Unit: mm

	Min. Horizontal Bending Radius (r)
RS40-LMC-CU-1	400
RS50-LMC-CU-1	500
RS60-LMC-CU-1	600

Lambda Chain Handling

9. Conveyor Design for Lambda Snap Cover Chain

9.1 Wearstrip

Conveyance should be effectuated on the tension side and the conveyor on the slack side should be supported by the wearstrip, both ends of which should be slightly curved to prevent vibrations and pulsation of the chain.

9.2 Chain Slack

The necessary slack in the chain during conveyor operation is 90 to 140 mm below the drive sprocket.

9.3 Curve at End of Wearstrip

The curve radius of the wearstrip should be larger than the back-flex radius of the chain (see table below).

Unit: mm

	RS40-SC	RS50-SC	RS60-SC	RS80-SC	RS100-SC
Min. Back-Flex Radius R	380	480	560	740	880

9.4 Ways to Support Chain

- Carry way: Make sure the chain is supported by the rollers. If supported by the plastic cover, the cover will quickly wear down.
- Return way: The whole surface of the plastic cover should be supported.

9.5 Wearstrip Height

A = Sprocket PCD - roller diameter / 2

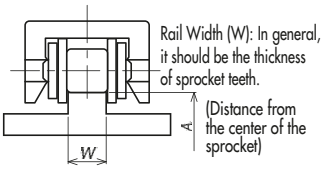

Figure 20: Carry Way

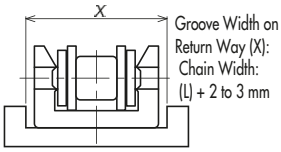

Figure 21: Return Way

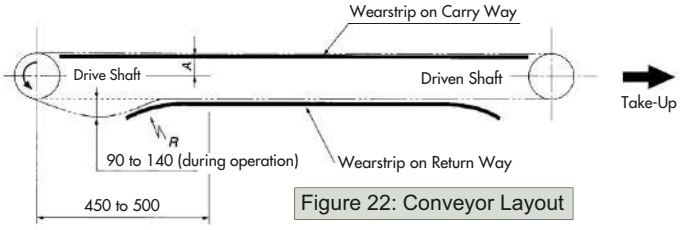

Figure 22: Conveyor Layout

10. Tools for Chain Disassembly

For Use with Roller Chain and Small Size Conveyor Chain

10.1 Cradles for Lambda Roller Chain

You will need a special chain cradle and primary and secondary punches to disassemble Lambda Chain.

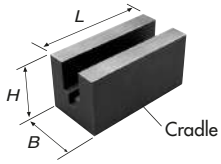

Model No.	L	H	B	Applicable Chains
RS-LMD01-AST	65	32	32	RS40-LMD-1
RS-LMD02-AST	80	40	40	RS50-LMD-1
RS-LMD03-AST	95	48	48	RS60-LMD-1
RS-LMD04-AST	130	60	60	RS80-LMD-1
RS-LMD05-AST	160	73	73	RS100-LMD-1
RS-LMD06-AST	160	88	88	RS120-LMD-1
RS-LMD07-AST	180	98	98	RS140-LMD-1

Notes: 1. All models stocked.
2. The special punches and cradle come as a set. Punch dimensions are the same as those found in 10.2.

10.2 Punches

Primary Punch		Secondary Punch		Applicable Chains
Model No.	L	Model No.	L	
RS-P14	60	RS-P24	80	RS40～60 · RF2040～RF2060
RS-P15	70	RS-P25	90	RS80～120 · RF2080～RF2120
RS-P16	80	RS-P26	120	RS140 · RF2140

Note: All models stocked.

Primary Punch

Secondary Punch

10.3 Chain Vises

The vise that can be used is restricted to certain chains depending on the chain's attachment type and roller type.

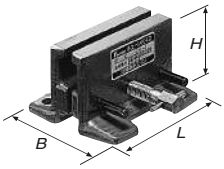

CV-1 Type

CV-2 Type

Model No.	Applicable Chain	Dimensions		
		L	H	B
RS-CV1	RS40～80	100	65	94～115
RS-CV2	RS40～160	180	110	120～151
RS-CV3	RS80～240	200	170	180～220

Note: All models stocked.

Sample Order

Chain No.	Quantity	Unit
RS-CV1	1	K

For Use with Large Size Conveyor Chain

10.4 T-pin Bending Tools

Include chain size in your order.
Made-to-order product.

Reference

Chain T-Pin Nominal Diameter	Applicable Chain
ϕ3 (2.6) x 15R	RF03
ϕ 4 (3.6) x 20R	RF05

Note: Nominal diameters are shown in ( ).

10.5 Holding Tools

Include chain size in your order. Made-to-order product.

MEMO

For Your Safety When Using the Chain

Warning To avoid danger, observe the following rules.

- Do not use chain or chain accessories for any purpose other than their originally intended use.
- Never perform additional work on chain.
  - ・Do not anneal any chain parts.
  - ・Do not clean chain with acids or alkalis. These may cause cracking.
  - ・Never attempt to electroplate chain or chain parts. This may cause hydrogen embrittlement.
  - ・Do not weld chain. Heating effects will cause weakening and cracking.
  - ・When a torch is used to heat or cut chain, remove the links on each side and do not reuse them.
- When replacing a worn or damaged part, do not replace just the worn or damaged part. Replace all parts with new parts.
- If a material that causes hydrogen embrittlement (acid, strong alkali, battery fluid, etc.) comes in contact with the chain, immediately stop using the chain and replace it with new chain.
- When using chain in a lifting device, set up a safety barrier and do not allow anyone to go under the equipment.
- Always install safety equipment (safety covers, etc.) on chain and sprockets.
- Strictly observe the general guidelines listed in Section 1, Chapter 1, 2nd Edition of the Japanese Occupational Safety and Health Regulations as well as rules and regulations concerning occupational safety and health in your region/country.
- When installing, removing, inspecting, maintaining and oiling chain,
  - ・Perform the work as instructed in the manual, catalog or other documentation that was provided with the product.
  - ・Before starting work, turn off the power switch and take measures to prevent it from being turned on accidentally.
  - ・Secure the chain and parts to prevent them from moving freely.
  - ・Use a press tool or other special tools to separate or connect chain, and follow the correct procedures.
  - ・Remove and insert pins and rivets in the correct direction.
  - ・Wear clothing and protective gear (safety glasses, gloves, safety shoes, etc.) that are appropriate for the work.
  - ・Only experienced personnel should perform chain replacement.

Caution To prevent accidents, observe the following rules.

- Understand the structure and specifications of the chain that you are handling.
- Before installing chain, inspect it to make sure no damage occurred during delivery.
- Inspect and maintain chain and sprockets at regular intervals.
- Chain strength varies by manufacturer. Only Tsubaki products should be used when chain is selected using Tsubaki catalogs.
- Minimum tensile strength refers to the failure point when the corresponding load is applied to the chain once and does not refer to the allowable operational load.

Warranty

1. LIMITED WARRANTY

Products manufactured by Seller: (a) conform to the design and specifications, if any, expressly agreed to in writing by Seller; and (b) are free of defects in workmanship and materials at the time of shipment. The warranties set forth in the preceding sentence are exclusive of all other warranties, express or implied, and extend only to Buyer and to no other person. ALL WARRANTIES OF MERCHANTABILITY OR FITNESS FOR A PARTICULAR PURPOSE ARE HEREBY EXCLUDED.

2. NON-RELIANCE

Buyer is not relying upon any advice, representations or warranties (except the warranties expressly set forth above) of Seller, or upon Seller's skill or judgment regarding the Seller's products.

Buyer is solely responsible for the design and specifications of the products, including without limitation, the determination of suitability for Buyer's application of the products.

3. CLAIMS

(a) Any claim relating to quantity or type shall be made to Seller in writing within 7 days after receipt of the products; any such claim made thereafter shall be barred.

(b) Any claim under the above-stated Limited Warranty shall be made to Seller in writing within three (3) months after receipt of the products; any such claim made thereafter shall be barred.

(c) Seller's liability for breach of warranty or otherwise is limited to repair or replacement, at Seller's option, of non-conforming or defective products. Buyer waives all other remedies, including, but not limited to, all rights to consequential, special or incidental damages, including, but not limited to, damages resulting from personal injury, death or damage to or loss of use of property.

(d) Repair, alteration, neglect or misuse of the products shall void all applicable warranties.

4. INDEMNIFICATION

Buyer will indemnify, defend and hold Seller harmless from all loss, liability, damage and expense, including attorneys' fees, arising out of any claim (a) for infringement of any patent, trademark, copyright, misappropriation of trade secrets, unfair competition or similar charge by any products supplied by Seller in accordance with the design or specifications furnished by Buyer, or (b) arising out of or connected with the products or any items into which the products are incorporated, including, but not limited to, any claim for product liability (whether or not based on negligence or strict liability of Seller), breach of warranty, breach of contract or otherwise.

5. ENTIRE AGREEMENT

These terms and conditions constitute the entire agreement between Buyer and Seller and supersede any inconsistent terms and conditions, whether contained in Buyer's purchase order or otherwise, and whether made heretofore or hereafter.

No statement or writing subsequent to the date hereof which purports to modify or add to the terms and conditions hereof shall be binding unless consented to in writing, which makes specific reference hereto, and which has been signed by the party against which enforcement thereof is sought. Seller reserves the right to change these terms and conditions without prior notice.

Note: The logos, brand names, or product names in this catalog are trademarks or registered trademarks of Tsubakimoto Chain Co. in Japan and other countries.

TSUBAKIMOTO CHAIN CO.

Japan	Headquarters	+81 6-6441-0011	http://tsubakimoto.com

Global Group Companies

AMERICAS

United States of America	U.S. TSUBAKI POWER TRANSMISSION, LLC	+1 847-459-9500	http://www.ustsubaki.com/
Brazil	TSUBAKI BRASIL EQUIPAMENTOS INDUSTRIAIS LTDA.	+55 11-3253-5656	http://tsubaki.ind.br/
Canada	TSUBAKI of CANADA LIMITED	+1 905-676-0400	http://tsubaki.ca/

EUROPE

Netherlands	TSUBAKI EUROPE B.V.	+31 78-6204000	http://tsubaki.eu/
France	KABELSCHLEPP FRANCE S.A.R.L.	+33 1-34846365	http://kabelschlepp.fr/
Germany	TSUBAKI DEUTSCHLAND GmbH	+49 8105-7307100	http://tsubaki.de/
	TSUBAKI KABELSCHLEPP GmbH	+49 2762-4003-0	http://kabelschlepp.de/
Italy	KABELSCHLEPP ITALIA S.R.L.	+39 0331-350962	http://kabelschlepp.it/
Russia	OOO TSUBAKI KABELSCHLEPP	+7 499-4180212	http://kabelschlepp.ru/
United Kingdom	TSUBAKIMOTO U.K. LTD.	+44 1623-688-700	http://tsubaki.eu/

INDIAN OCEAN RIM

Singapore	TSUBAKIMOTO SINGAPORE PTE. LTD.	+65 6861-0422/3/4	http://tsubaki.sg/
Australia	TSUBAKI AUSTRALIA PTY. LTD.	+61 2-9704-2500	http://tsubaki.com.au/
India	TSUBAKI INDIA POWER TRANSMISSION PTE. LTD.	+91 44-4231-5251	http://tsubaki.sg/
Indonesia	PT. TSUBAKI INDONESIA TRADING	+62 21-571-4230/1	http://tsubakimoto.co.id/
Malaysia	TSUBAKI POWER TRANSMISSION (MALAYSIA) SDN. BHD.	+60 3-7859-8585	http://tsubaki.sg/
New Zealand	TSUBAKI AUSTRALIA PTY LIMITED - NEW ZEALAND BRANCH	+64 275-082-726	http://tsubaki.com.au/
Philippines	TSUBAKIMOTO SINGAPORE PTE. LTD. - PHILIPPINES REPRESENTATIVE OFFICE	+63 2-464-7129	http://tsubaki.ph/
Thailand	TSUBAKIMOTO (THAILAND) CO., LTD.	+66 2-262-0667	http://tsubaki.co.th/
Vietnam	TSUBAKIMOTO SINGAPORE PTE. LTD. - VIETNAM REPRESENTATIVE OFFICE	+84 8-3999-0131/2	http://tsubaki.net.vn/

EAST ASIA

Korea	TSUBAKIMOTO KOREA CO., LTD.	+82 2-2183-0311	http://tsubakimoto-tck.co.kr/
Taiwan	TAIWAN TSUBAKIMOTO CO.	+886 33-293827/8/9	http://tsubakimoto.com.tw/

CHINA

China	TSUBAKIMOTO CHAIN (SHANGHAI) CO., LTD.	+86 215396-6651/2	http://tsubaki.cn/

Note: In accordance with the policy of TSUBAKIMOTO CHAIN CO. to constantly improve its products, the specifications in this catalog are subject to change without notice.
The logos, brand names, or product names in this catalog are trademarks or registered trademarks of Tsubakimoto Chain Co. in Japan and other countries.
Catalog No.ME1507 ©2015/11 TSUBAKIMOTO CHAIN CO. Printed in Japan 3,000