Innovation in Motion
TSUBAKI

TSUBAKI
SMALL SIZE CONVEYOR CHAINS & SPROCKETS

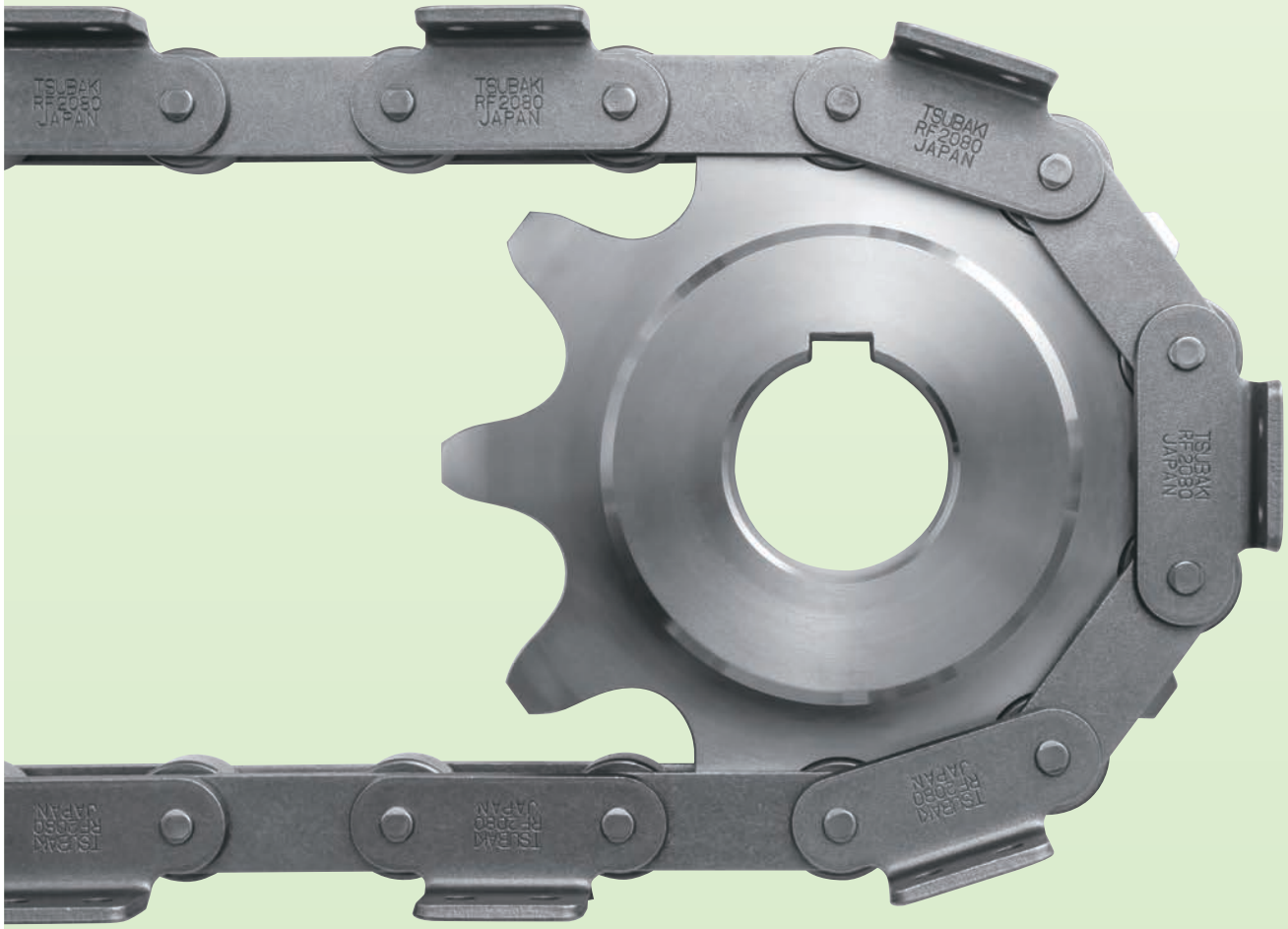

Catalog ver. 2

TSUBAKI ECO LINK

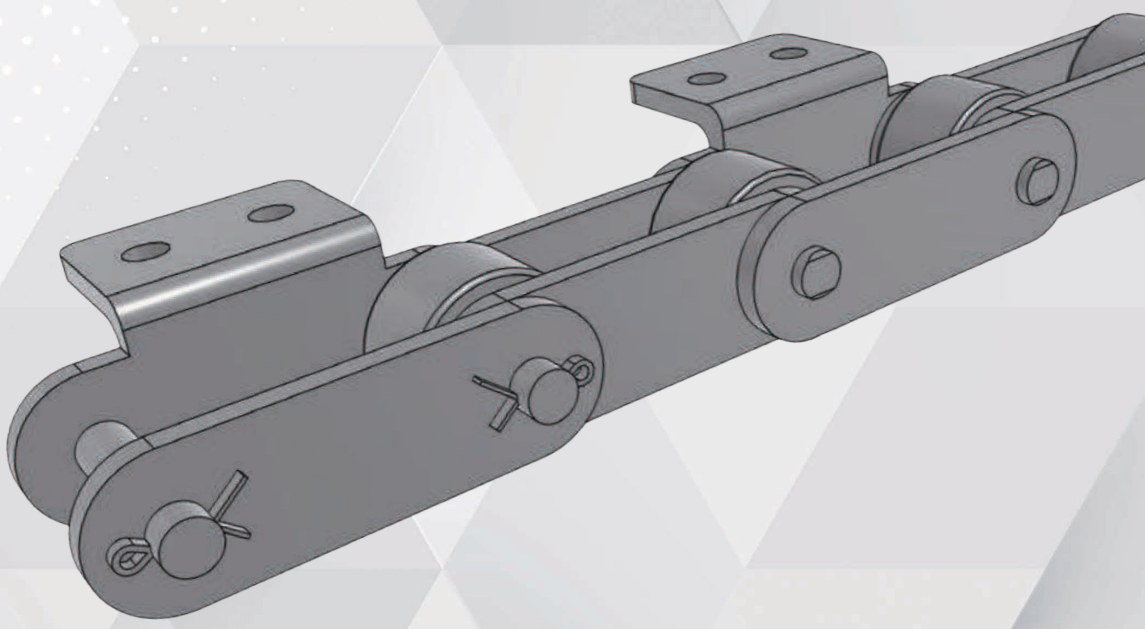

3D CAD

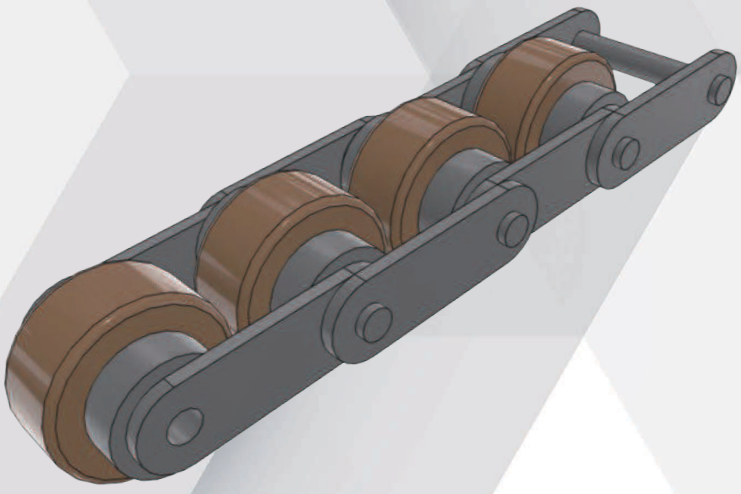

Tsubaki Power Transmission Products Information Site

https://tt-net.tsubakimoto.co.jp/tecs/top/index.asp

Please make use of our engineering support, which includes detailed product information, selection software, usage examples, 2D/3D CAD data, instruction manuals, and various data downloads.

HOME ▶ Download drawing ▶ Select product ▶ Download drawing via CADENAS (external site)

Note: The CAD data here is made available to you via the CAD drawing library, PARTcommunity, provided by CADENAS WEB2CAD Inc.
Please direct your inquiries regarding the CAD data service or PARTcommunity to:
CADENAS WEB2CAD Inc. TEL: +81-3-5961-5031 FAX: +81-3-5961-5032

UPGRADED 2023/01

Surface-Treated Chain

NEP Series Neptune™

Page 25–

NEPTUNE

Neptune™—Tsubaki's unique corrosion-resistant chain

NEP Series

Combining our newly developed special coating and special resin coating gives superb resistance to corrosion, rust, and chemicals

Superb resistance to corrosion by water and alkaline chemicals

Greatly improved resistance to salt water

The upgraded chain has improved resistance to corrosion from salt water. It can withstand 1,000 hours of exposure to salt water, compared to 700 hours with the previous series (based on in-house testing).
It also has excellent resistance to alkaline chemicals, such as those commonly used to clean food-processing equipment.

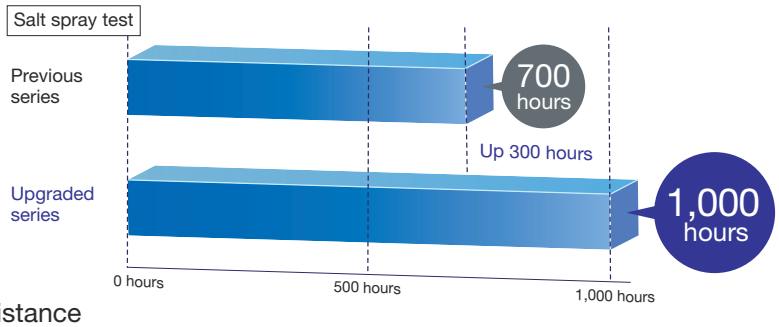

● Superb Corrosion and Chemical Resistance

	Salt spray test		
	General-use roller chain	Previous Neptune™	Upgraded Neptune™
Corrosion resistance	After 10 hours	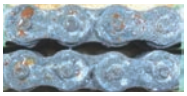 After 1,000 hours	After 1,000 hours

- The upgraded chain has extra corrosion resistance. (Highly corrosive environment testing carried out in accordance with JIS-Z-2371 salt spray test.)
- The rollers have the same coating as the plates, pins, and bushes.

	Immersed in 1,000 ppm sodium hypochlorite solution	Salt spray test after being immersed in 5% sodium hydroxide solution
	Upgraded Neptune™	Upgraded Neptune™
Chemical resistance	After 2,000 hours	

- Corrosion resistance to sodium hypochlorite solution is on a par with the previous Neptune chain. (The above shows the result of an immersion test in sodium hypochlorite solution.)
- We used a proprietary method to evaluate chemical resistance to a sodium hydroxide solution.
- Chemical resistance is equal to or better than the previous Neptune chain. (The above shows the result of undergoing 65 hours of a salt spray test after being immersed in a chemical solution for 45 hours.)

● New Surface Treatment

\ Newly developed by Tsubaki /

A new surface treatment combining a special coating and a special resin coating gives superb resistance to corrosion, rust, and chemicals.

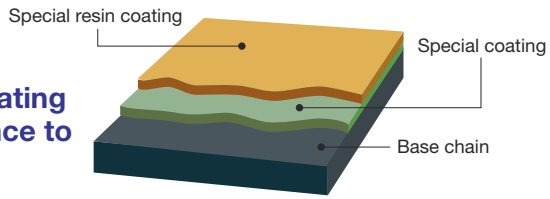

Stainless Steel Chain

SS Series / HS Series

Page 25–

SS Series

UPGRADED 2023/01

Seamless bushes improve wear life and maximum allowable load

Note: RS80, RS100, and RF2080 were launched in October 2021.

HS Series

NEW 2022/4

13Cr stainless steel pins, bushes, and S rollers give the chain longer life and higher strength

■Comparing Wear Elongation

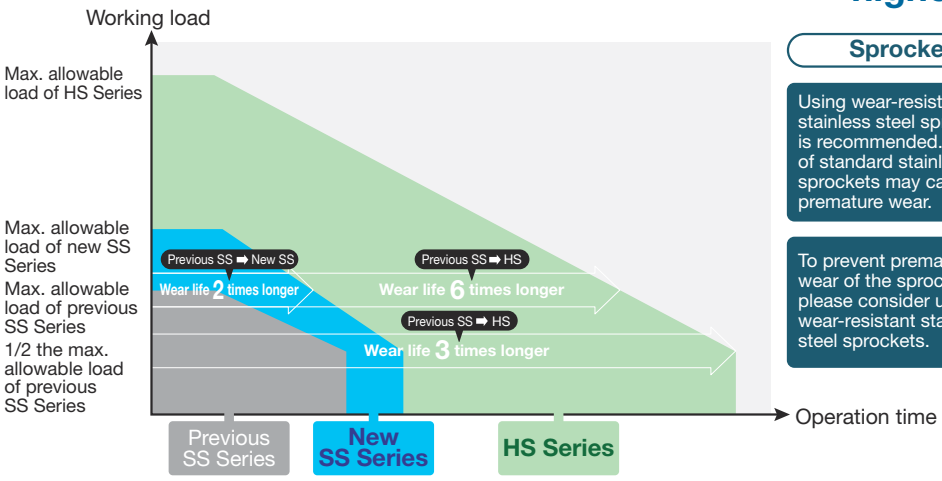

Sprockets

Using wear-resistant stainless steel sprockets is recommended. The use of standard stainless steel sprockets may cause premature wear.

To prevent premature wear of the sprockets, please consider using wear-resistant stainless steel sprockets.

In-house test conditions

Size: RS50
No. of links: 66
Sprockets: 17 teeth (drive/driven)
RPM: 185 r/min
Environment: Ambient temperature, dry condition*

* What is "dry condition"?

When the chain is not lubricated and is not exposed to water during operation.

Example: When a chain is washed after a day of operation and run the next day in an almost dry state, it is considered to be in a "dry condition."

Sprockets for HS Series Stainless Steel Chain

Stainless Steel Sprockets Wear-Resistant Series

Page 131–

A special surface treatment boosts wear resistance

Wear life 2.5 times the previous stainless steel sprocket

Comparing sprocket wear life

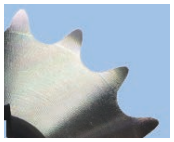

Wear-resistant stainless steel sprocket after use

Standard stainless steel sprocket after use

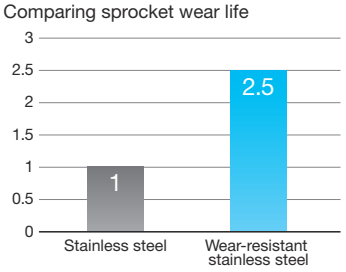

In-house test conditions

Size: RS50 No. of links: 66 Working load: 1.85 kN
Sprockets: 17 teeth (drive/driven) RPM: 185 r/min
Environment: Ambient temperature, dry condition

LAMBDA Small Size Conveyor Chain

Page 39–

Oil impregnated sintered bushes use NSF-H1 certified oil

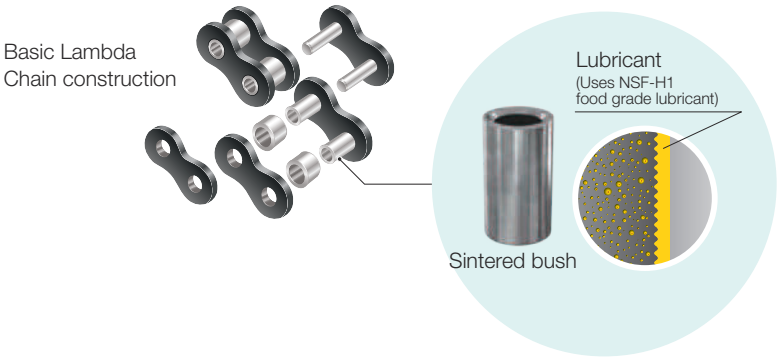

Long life without additional lubrication

Lambda Chain can offer up to twice the wear life* of previous models under certain conditions.

*In-house test results; actual results will vary depending on operating conditions.

Integrated Attachment Chain

Page 74–

Integrated Attachment Chain is Tsubaki's special customized attachment chain that integrates chains with jigs that the customer would normally attach. The jigs (attachments) are incorporated into the chains in advance.

Before introducing integrated attachment chain

Manufacturing the chain and jigs and mounting the jigs were handled by separate contractors. Process management was complicated and costly.

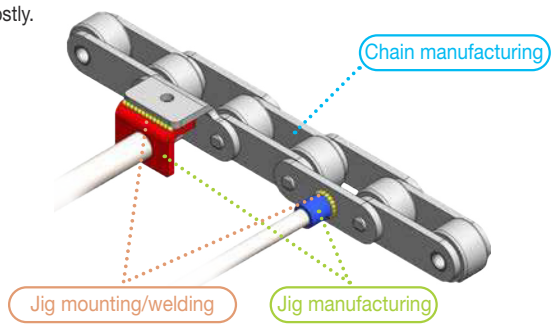

After introducing integrated attachment chain

Everything is integrated into Tsubaki

The best solution for all processes, cost, and design.

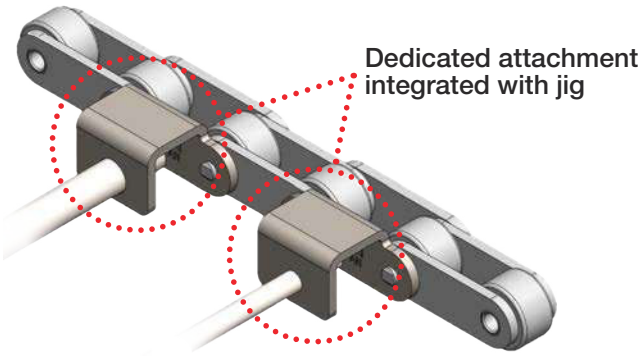

Significant reduction in time and cost

All manufacturing and mounting of jigs is handled by Tsubaki, thereby reducing costs. We centrally manage all drawings using drawing numbers, making it easy to place your next order. We also handle all inquiries regarding delivery dates and specifications.

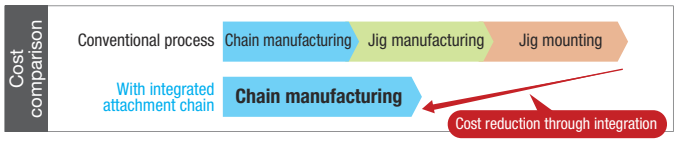

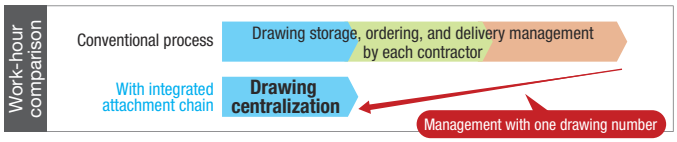

See the **Tsubaki Power Transmission Products Information Site** for usage examples.

https://tt-net.tsubakimoto.co.jp/tecs/top/index.asp

HOME ▶ Product info ▶ Small size conveyor chain ▶ Integrated attachment chain

Table of Contents

Product Introduction 2

Precautions before Use 7

Construction 9

Sprocket Categories and Variations 13

Product Lineup 15

Ordering Small Size Conveyor Chains 17

Attachment Spacing and Description 21

Ordering Sprockets 24

General Use Small Size Conveyor Chain P25

Double Pitch Chain 27

RS Attachment Chain 29

Additional RS Attachment Chains 31

RF Roller Chain 32

BS Attachment Chain 33

2-Strand Double Pitch Chain 35

2-Strand RS Attachment Chain 36

Corrosion Resistant Small Size Conveyor Chain P25

Double Pitch Chain 27

RS Attachment Chain 29

Additional RS Attachment Chains 31

RF Roller Chain 32

BS Attachment Chain 33

2-Strand Double Pitch Chain 35

2-Strand RS Attachment Chain 36

Poly Steel Attachment Chain 37

Lube Free Small Size Conveyor Chain P39

Lambda Double Pitch Chain 41

Long Life Lambda Double Pitch Chain (X-Λ [X-Lambda]) 43

Lambda RS Attachment Chain 45

Long Life Lambda RS Attachment Chain (X-Λ) 47

Lambda BS Attachment Chain 49

Lambda RF Roller Chain 51

Special Small Size Conveyor Chain P52

Hollow Pin Double Pitch Chain 52

Hollow Pin RS Chain 52

Curved Double Pitch Chain 53

Curved RS Attachment Chain 54

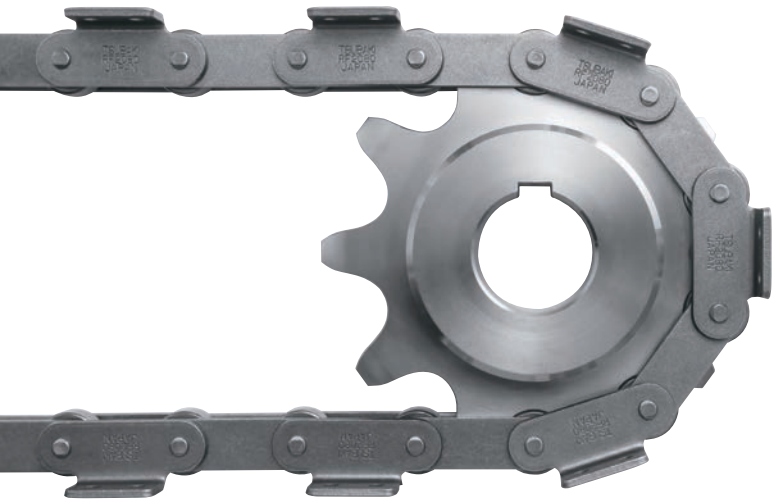

Plus α Attachment Chain P55

Speedy Delivery ---------- 56

Stock Designs ---------- 61

Film Gripper Chain ---------- 73

Integrated Attachment Chain ---------- 74

Indexing Conveyor Chain P79

Bearing Bush Chain ---------- 81

Bearing Cage Chain ---------- 82

Mini Tact Chain and Sprockets ---------- 84

Indexing Table Chain and Sprockets ---------- 85

Free Flow Chain P87

Double Plus Chain ---------- 89

Center Roller Chain ---------- 95

Accessories for Double Plus Chain ---------- 96

Outboard Roller Chain ---------- 101

Top Roller Chain ---------- 111

Sprockets P119

Applicable Sprockets ---------- 119

Double Pitch Sprockets ---------- 121

Sprockets for RS Attachment Chain ---------- 125

Sprockets for BS/DIN Standard RS Roller Chain ---------- 128

RS Sprockets for 2-Strand Chain ---------- 129

Stainless Steel RS Sprockets ---------- 131

Engineering Plastic RS Sprockets ---------- 134

Sprockets for Double Plus Chain ---------- 135

Sprockets for Double Pitch Top Roller Chain ---------- 135

Sprockets for Outboard Roller RS Chain ---------- 136

Fit Bore ---------- 137

Fit Bore BR Type ---------- 138

Engineering Manual P141

Selection ---------- 142

Handling ---------- 162

Inquiry Sheet ---------- 179

For Safe Use, Warranty ---------- 180

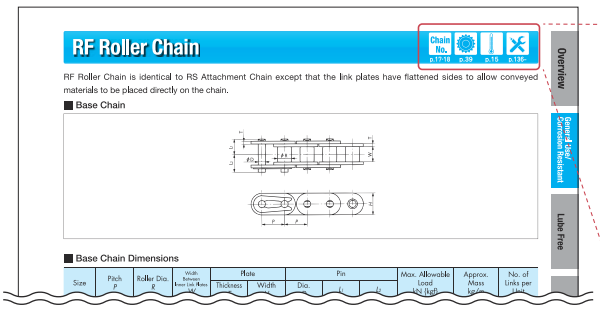

What the pictograms mean

Chain number
Indicates the page explaining the chain number.

Sprockets
Indicates the page showing the corresponding sprockets.

Operating temperature range
Indicates the page showing the corresponding operating temperature range.

Engineering
Indicates the pages on selection, handling, troubleshooting, and more.

Tsubaki Eco Link
The Tsubaki Group cares about the environment. That is why we have established standards for evaluating the environmental friendliness of our products. Only products that meet our exacting guidelines are recognized as eco-products and certified with the Tsubaki Eco Link logo.

Precautions Before Use

Be sure to read this entire Small Size Conveyor Chain catalog to make the proper chain selection for your application.
In addition, be sure to indicate the relevant section to the persons who will actually be maintaining the conveyor chain.
The dimensions shown in this catalog are nominal dimensions and may differ from actual dimensions.

Read the Following before Use

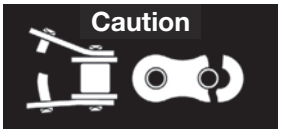

Small Size Conveyor Chain is a convenient, compact mechanical device that can transport goods and materials while taking up a minimal amount of space. However, it does not have an unlimited service life.

1. Conveyor chain must be inspected on a regular basis and replaced as necessary. It is subject to wear and should be regarded as an expendable item.
2. Elongation resulting from wear may cause conveyor chain to ride up on a sprocket or break. Proper lubrication or the use of a lube free chain such as the Lambda Series can minimize chain elongation and extend service life.
3. Wear between the bushes and the rollers will cause interference between the link plates and guide rails, increasing tension on the chain. This may lead to an increase in motor power consumption, or may cause chain breakage. This situation can be avoided with proper lubrication or by using Lambda Chain or plastic roller chain.
4. Excessive tension may cause chain breakage. This can be avoided through proper selection that anticipates the inertial force the chain will be subject to.
5. Environmental conditions, such as the presence of corrosive liquids or gases, may cause chain breakage. This can be avoided by selecting a chain material appropriate to the usage conditions.
6. Improper centering, or problems with layout or design, can shorten chain life or cause chain breakage.
   This can be avoided by proper positioning and alignment.
7. Wear on chain parts will generate debris (wear debris).
8. When restrictions by law or guidelines exist in selecting chain, select the chain based on those laws and guidelines, and on allowable tension. Choose a chain with an ample margin.
9. When link plate holes are enlarged or pin diameters made smaller to make it easier to insert and remove the pin, chain performance may decrease and cause accidents.
10. Contact a Tsubaki representative regarding whether a product contains substances restricted for use in specific industries and applications.

Features and Important Points of Conveyor Chains

Features

1. Can move conveyed goods or materials with almost any shape or form.
2. Wide operational range, including conveyor length, transport direction, usage environment, etc.
3. Can reliably convey goods or materials with no slippage.
4. Highly durable, highly efficient.

Important Points

1. No slippage is a strong advantage of conveyor chain, but consideration must be given in selection when impact resistance is considered.
2. The mechanical nature of the chain engaging the sprocket will cause speed variations.

Handling Precautions

1. Mishandling the chain may cause a loss of accuracy. Never handle the chain as shown in photographs 2 and 3.
2. Rough handling such as throwing or dropping the chain will cause twisting deformation and/or a loss of accuracy.
3. Stainless steel chain, in particular, must be handled with care.

Chain Handling

①

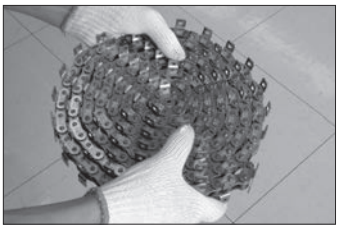

Hold the chain so that it does not become tangled or twisted.

②

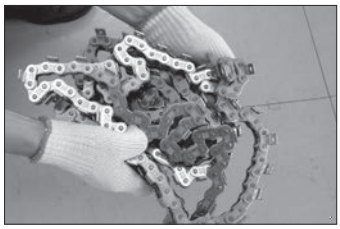

Handling the chain in such a way that it becomes tangled or looped around itself will cause it to become twisted and lead to a loss of accuracy.

③

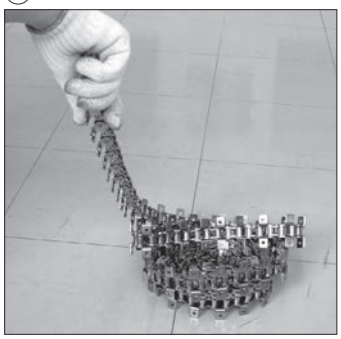

Applying excessive load in the direction that the chain is twisted will cause torsion and lead to a loss of accuracy.

Glossary

1. Maximum Allowable Load

The maximum allowable load of small size conveyor chain (excluding stainless steel chain and engineering plastic chain*) is the value derived from the lowest fatigue limit. When a load lower than this value is repetitively applied to the chain, fatigue failure will never occur.

*Stainless steel and engineered plastic chains: Maximum allowable load is determined from specifying the surface pressure between pins and bushes based on wear performance.

2. Minimum Tensile Strength

Minimum value determined by taking into account past breakage results. When a given chain breaks under tension, it does not pass Tsubaki standards if it breaks under a load lower than this value.

3. Average Tensile Strength

Tensile strength determined from the calculated strengths of each component, taking into account past results. When tensile tests are performed, the value at failure may be higher or lower than this number, and thus, this value is not guaranteed.

4. Roller Allowable Load

Typical value that will not cause roller rotational failure, assuming use under lubricated conditions.

5. Attachment Allowable Load

Vertical load that an “A” attachment can accept. Depending on the shape and structure of attachments to be installed by the customer, force may be generated that will cause A attachments to twist. Contact a Tsubaki representative if you have any concerns.

6. Total Length Tolerance of Conveyor Chain

Length test method and length tolerance are specified as below:

JIS B 1801：2014

RS attachment chain……–0.05% to 0.25%

JIS B 1803：2018

Double pitch chain (without attachments)……0% to 0.15%

Double pitch chain (with attachments)……–0.05% to 0.25%

The length tolerance of any individual size when subjected to a measured load (e.g. 500 N [50.99 kgf] for RS80) specified in JIS is 0 to +0.15% of the reference length. The reference length is calculated by multiplying the reference pitch by the number of links.

7. Pitch Circle Diameter (PCD)

Diameter of the circle circumscribing the tooth profile pitch of the sprocket. (JIS B 1812:2015)

Construction

Double Pitch Chain Construction

- Double Pitch Roller Chain has the same basic construction as standard roller chain, but chain pitch is twice as long, and the chain has flat-shaped link plates.
- R rollers and S rollers are available, with usage depending on application. (See “Roller Type” on page 11.)
- Can be used with double pitch sprockets or RS Roller Chain sprockets (with S rollers, when the number of sprocket teeth is 30 or more).
- Ideal for applications where the conveying distance is relatively long or the speed is low.

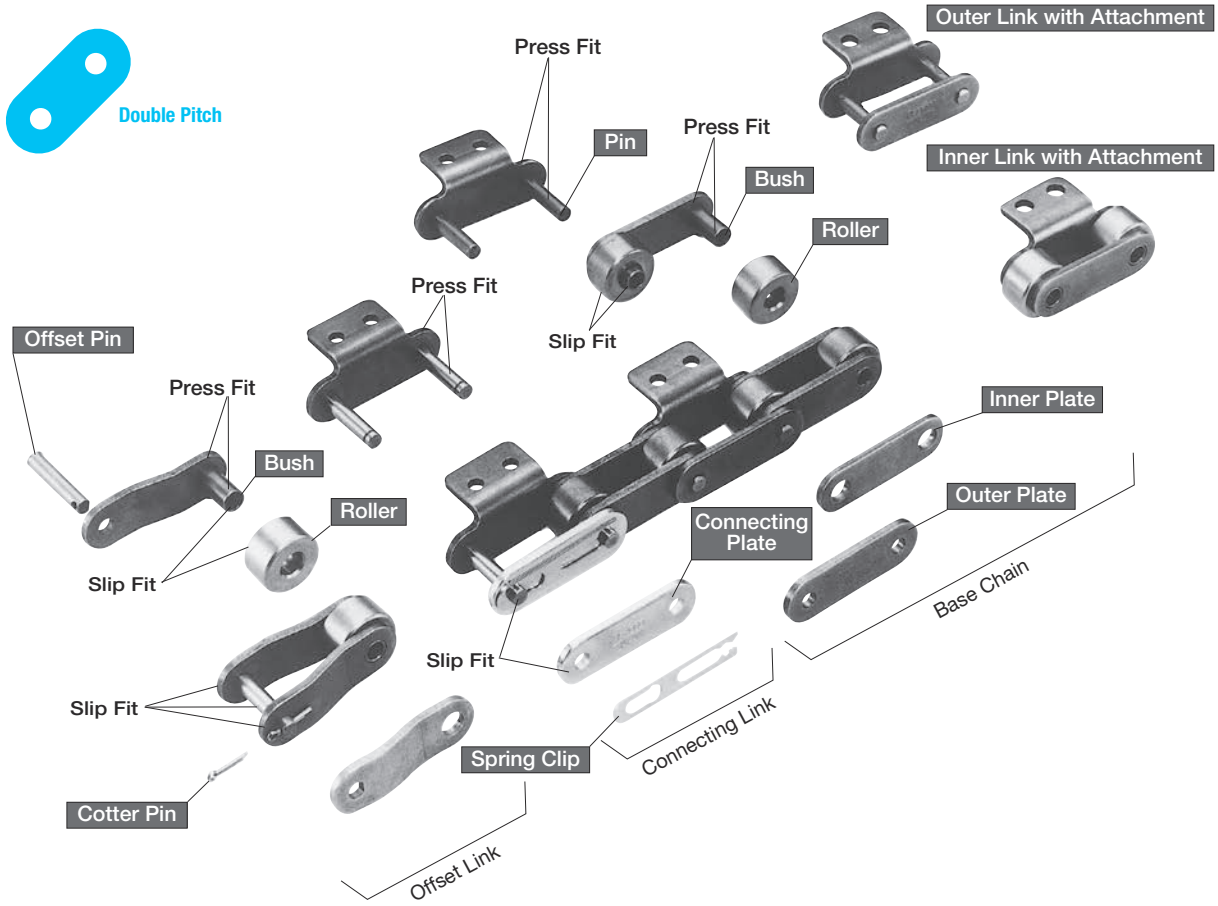

The pitch, roller diameter, and inner width of the inner link are considered the basic three dimensions of a roller chain. When these dimensions are identical, a roller chain and sprocket are dimensionally compatible.

Slip Fit
When the shafts and holes are fitted together, there is a continuous loose fit. This is a fit where the range of tolerance for the hole is larger than the range of tolerance for the shaft (pin or bush).

Press Fit
When the shafts and holes are fitted together, there is a continuous interferential fit. This is a fit where the range of tolerance for the hole is smaller than the range of tolerance for the shaft (pin or bush).

The dimensions shown in this catalog are nominal dimensions and may differ from actual dimensions.

1. Plate

The plate bears the tension placed on the chain. Because the accuracy of the holes into which pins or bushes are fit affects chain quality, plates are manufactured with particular precision and finished into tough plates with high fatigue strength and impact resistance.

2. Pin

The two ends of the pin are inserted into holes in the outer plates and riveted in place. For Hollow Pin Chain and Poly Steel Chain, they are inserted only. Because the pins are subject to shearing and bending forces via the plates, and because the bushes rotate and slide along the pins as the chain articulates, they are manufactured with an emphasis on strength and wear resistance.

RS Attachment Chain Construction

- This chain is a standard RS Roller Chain with added attachments.
- Because the chain pitch is smaller, it can transport small objects using a small pitch, and is ideal for general applications where conveying distance is short.
- Runs quietly, smoothly and can travel at high speeds.
- RS Roller Chain sprockets can be used in almost all cases.

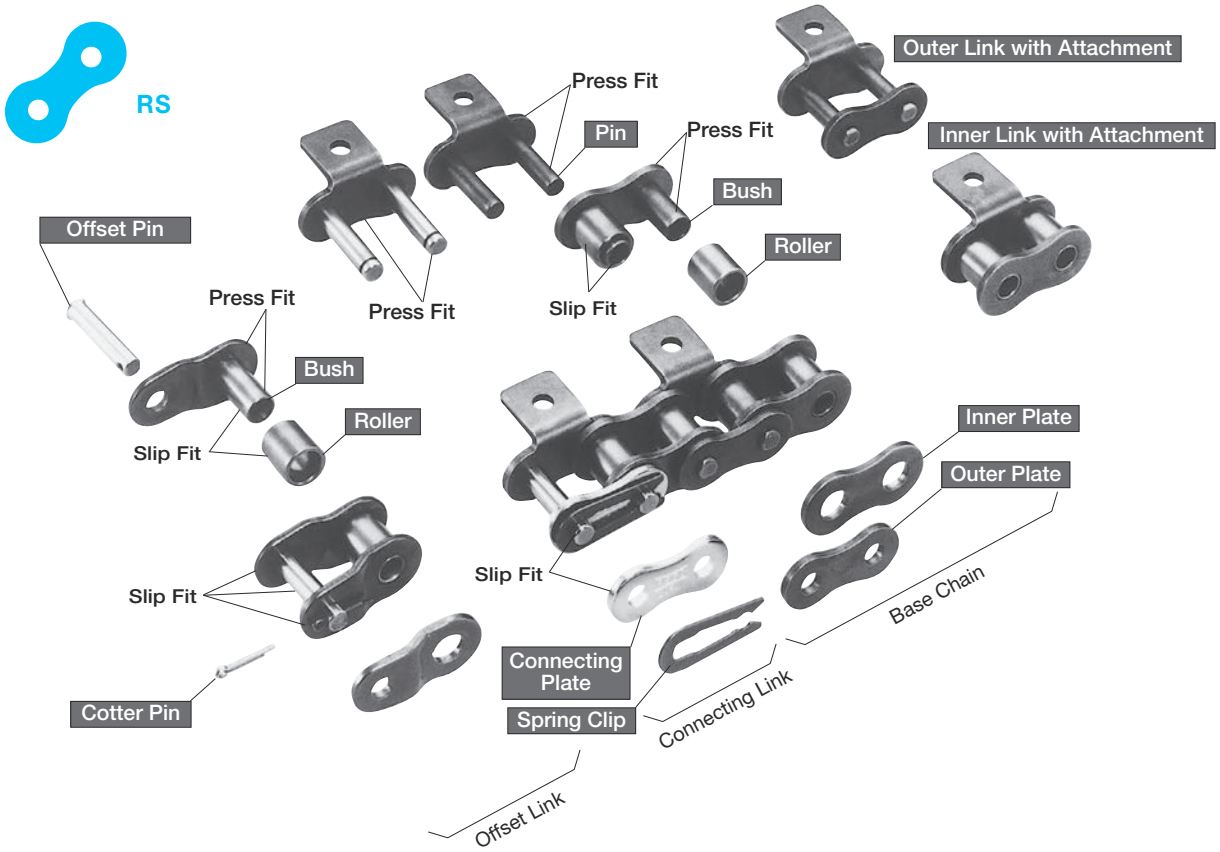

3. Bush

The two ends of the bushes are inserted into the inner plate and function as bearings for the pins and rollers. They are subject to complex forces through the various parts, and are finished to specifications having high wear resistance.

4. Roller

Rollers are slip fit onto the bushes, and lighten mechanical shock when the chain engages the sprocket. In addition, they serve to reduce running resistance by turning while the chain is in motion, making the chain run smoothly. Wear resistance is important.

5. Attachment

Bolt holes are drilled for attachments. (For details, see page 12: “Standard Attachments”.)

6. Spring Clip/Cotter Pin

Spring clips and cotter pins prevent the connecting plates from detaching and are important components to maintain the intrinsic strength of the chain. Always install these parts.

7. Inner Link

The ends of the two bushes are inserted into the inner plate to form the inner link. Rollers are slip fit over the outside of the bushes.

8. Outer Link

The ends of the two pins are inserted into the outer plate. The ends of the pins other than those on the connecting links are riveted in place to prevent detachment. For Hollow Pin Chain and Poly Steel Chain, they are inserted only.

Construction

Connecting Parts

1. Connecting Links (Code: JL, PJL)

1) A chain normally consists of multiple interconnected links and so requires a connecting link.
2) Connecting links are available with attachments (abbreviated: Attachment JL) or without attachments (abbreviated: Plain JL).
   Connecting links for small size conveyor chain (Plain JL) differ in specifications from drive chain (RS roller chain) connecting links. They cannot be used for drive chains.
3) Connecting links are available with either spring clips or cotter pins to prevent the connecting plate from detaching. See chart at right.
4) The connecting plates may be plated for identification purposes. Please contact us for the details of applicable products.

2. Offset Links (Code: OL)

1) An offset link is used when a strand of chain has an odd number of links.
2) Attachment offset links are not available.

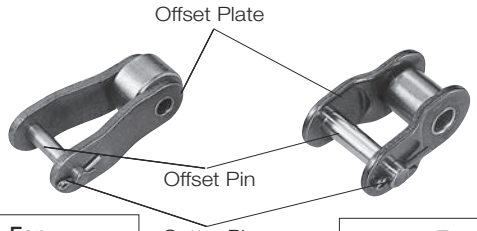

For Double Pitch Chain

For RS Attachment Chain

■ Connecting Link Application Table

Form		Clip Type	Cotter Pin Type
Chain Size		RF2060 or Smaller R60 or Smaller	RF2080 or Larger R80 or Larger
Double Pitch	Plain JL	Spring Clip Connecting Plate Code: JL	Cotter Pin Connecting Plate Code: JL
	Attachment JL	Spring Clip Code: JL	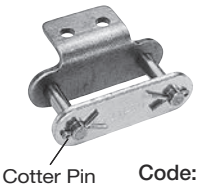 Cotter Pin Code: JL
RS	Plain JL	Spring Clip Code: PJL	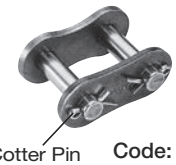 Cotter Pin Code: PJL
	Attachment JL	Spring Clip Code: JL	Cotter Pin Code: JL

Note: NS specifications use a cotter pin on the connecting link regardless of size. Please contact a Tsubaki representative if a clip is needed.

Roller Type

1. R Roller

The roller diameter is larger than the plate width, and the roller is used in Double Pitch Chain. R rollers are the most basic and feature high load carrying capacity and low frictional resistance.

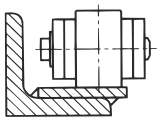

Roller support example

2. S Roller

The roller diameter is smaller than the plate width. Effectively reduces shock and wear when the chain engages the sprocket.

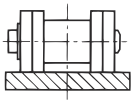

Roller support example

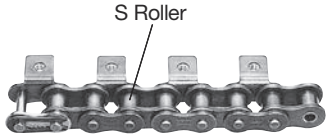

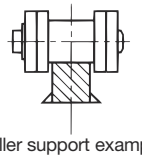

Roller support example

3. RP Roller

Plastic R roller. Lightweight and low noise. Used in plastic roller double pitch chain.

4. RPKV Roller

Higher heat resistance than RP rollers. Used in KV Series plastic roller double pitch chain.

5. RPSN Roller

A lower-noise version of RP rollers. Used in low-noise plastic roller double pitch chain.

6. SP Roller

Plastic S roller. Lightweight and low noise.

Standard Attachments

1. A1, A2 Attachments

An A attachment has a bent link plate that extends out on one side of the chain, forming an L-shape. The attachment comes with one or two bolt holes and is designated as A1 or A2, respectively (A1 only for RS type).

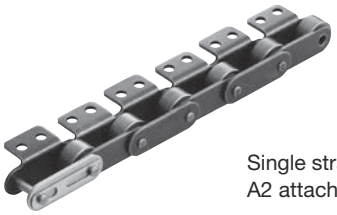

Single strand with
A2 attachment every link

2. K1, K2 Attachments

A K attachment has a bent link plate that extends out on both sides of the chain. The attachment comes with one or two bolt holes and is designated as K1 or K2, respectively (K1 only for RS type).

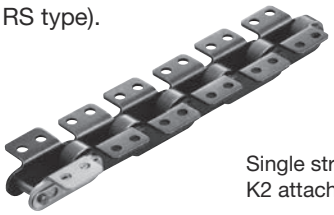

Single strand with
K2 attachment every link

3. SA1, SA2 Attachments

With an SA attachment, the link plate is extended vertically on one side of the chain. The attachment comes with one or two bolt holes and is designated as SA1 or SA2, respectively (SA1 only for RS type).

Single strand with
SA2 attachment every link

4. SK1, SK2 Attachments

With an SK attachment, the link plate is extended vertically on both sides of the chain. The attachment comes with one or two bolt holes and is designated as SK1 or SK2, respectively (SK1 only for RS type).

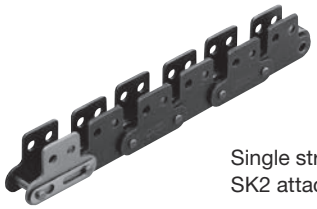

Single strand with
SK2 attachment every link

5. GNK1 Attachment

The GNK1 attachment indicates a chain with a bolt hole drilled into the center of the link plates on both sides of the chain. (Available only for S rollers on Double Pitch Chains.)

Single strand with
GNK1 attachment every link

6. EP Attachment (Extended Pin)

One end of the pins is extended on one side of the chain.

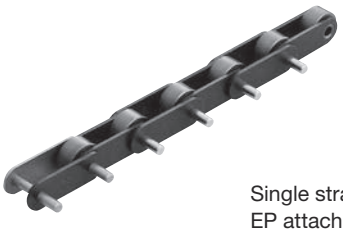

Single strand with
EP attachment every link

7. Hollow Pin Chain

In Hollow Pin Chain, the pins have a hole, allowing for installation of various attachments.

Attachment Positioning

Chains can be assembled with an attachment on every link plate or at intervals of two or more links. However, placing an attachment on an outside link at an interval of an even number of links is convenient for maintenance purposes.

Single strand with
A2 attachment
every second link

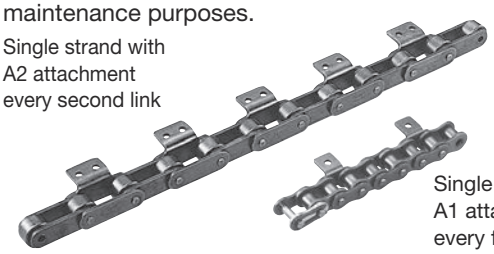

Single strand with
A1 attachment
every fourth link

Note: AA1, SAA1, WA1, and other attachments are also available for RS attachment chains. (See page 31.)

Plus α Attachments

Speedy Delivery

Tsubakimoto maintains a stock of parts with special dimensions and a proven track record of performance, and can handle stock orders and quick deliveries.

- Speedy delivery service is ideal for situations in which standard dimension products do not fit exactly.
- Lube Free Lambda Chain is also available. (See pages 56 to 60.)

Stock Designs

Tsubakimoto has a portfolio of reliable designs with a track record of success. Selecting from among these designs will lead to better design efficiency for your application as a whole. (See pages 61 to 73.)

Sprocket Categories and Variations

Sprocket Categories

Double Pitch

Special sprockets are required for R rollers.
If the base chain roller is an S roller, RS sprockets can be used when the number of sprocket teeth is 30 or more. Special sprockets are required when the number of sprocket teeth is 29 or fewer.

RS Attachment Chain

In most cases, standard RS sprockets can be used.
A special sprocket may be required when the sprocket diameter is small or when special attachments are installed.

Double Pitch Sprocket Engagement

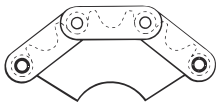

RF chain (for S rollers)
(multi-engagement sprocket)

S roller sprocket

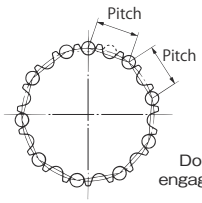

Double engagement

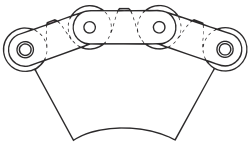

RF chain (for R rollers)

R roller sprocket

1) Among double pitch sprockets, if the base chain rollers are S rollers, it is a multi-engagement sprocket, and the chain engages with every other tooth.
2) The number of teeth that actually engage is called the number of effective teeth, as opposed to the number of actual teeth. For S rollers, when the number of actual teeth is odd, the roller engages with different teeth for each rotation of the sprocket. Consequently, the sprocket wears less and has a longer service life.

Applicable Sprockets

Double Pitch	R rollers	Use double pitch sprockets
	S rollers	Use double pitch sprockets. RS sprockets can be used when the number of sprocket teeth is 30 or more.
RS Attachment Chain		RS sprockets can be used.

Sprocket Variations

Pilot Bore Series

Wide selection of products. Conforms to JIS standards. Models in frequently used sizes and with frequently used number of teeth are stock items. Available with pilot bore, or in stainless steel or engineering plastic. Pilot Bore Series' shaft holes need to be machined prior to use.

Fit Bore Sprockets with Bore Finishing

Applicable products: Double pitch sprockets (steel, stainless steel)
Sprockets for Double Plus chain
RS sprockets (steel, stainless steel)

◆ Features

Smart	There are codes for the types of finishing, making ordering by model number accurate.
Smooth	The customer does not need to create a drawing or attach one when ordering. We can also provide drawings for checking specifications.
Speedy	Can be used as-is when received.

S Type Lock Sprockets

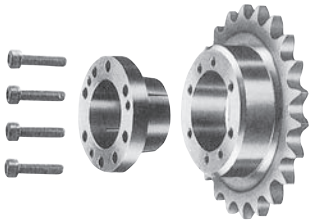

Applicable products: Double pitch sprocket S rollers/R rollers
RS sprockets

S type Lock Sprockets have friction-type locking devices that enable keyless mounting of sprockets on shafts.

◆ Features

1. No wobbling after mounting (tightening)
2. Easy phase alignment
3. Easy mounting and dismounting
4. No retainers required

◆ Tightening Principle

The inner diameter of the sprocket and the outer diameter of the lock sleeve are tapered. When the mounting bolts are tightened, the sprocket will slide and move up on the tapered surface. A wedge action will generate force P and force P' in the radial direction to press on the shaft and tapered inner side, and frictional force will tightly secure the sprocket and shaft.

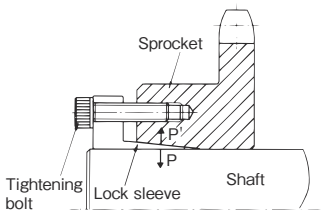

◆ Bolt Tightening Positions

The same sleeve is used for all models, so some holes may not be used. Check the installation guide that comes with the product before attaching the mounting bolts for use.

◆ Direction of Sprocket Movement when Tightening Bolts

When mounting an S Type Lock Sprocket, the sprocket will move 0.5mm to 1.0mm in the direction of the shaft between the time the sprocket is initially secured and the time the sprocket is tightened. Therefore, take this movement into consideration when centering the sprocket. The amount of sprocket movement varies with the type. (See the illustration on the right.)

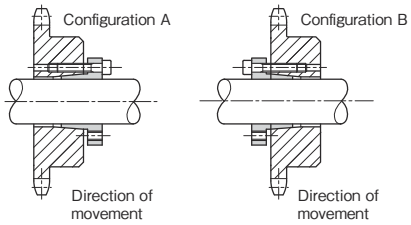

Product Lineup

Series	Product Name	Series Code	Features, Applications	Operating Temperature Range (°C)	Lubrication
General Use Small Size Conveyor Chain	Double Pitch Chain, RS Attachment Chain*1	—	General uses, carbon steel	–10 to 150	Anti-rust pre-lube
	RF Roller Chain	—	Direct placement of materials on chain		
	BS Attachment Chain	—	ISO 6060 B Series conveyor chain		
Corrosion Resistant Small Size Conveyor Chain	Stainless Steel Double Pitch Chain Stainless Steel RS Attachment Chain	SS	Water immersion, acids/alkalis, and low-/hightemperature environments	–20 to 400	Not lubed*7
		HS	1.8 times the allowable load of SS chain; less corrosion resistance than SS chain	–10 to 150	Volatile corrosion inhibitor
		AS	Slightly less corrosion resistance than SS	–20 to 400	Lubricant
		NS	Higher corrosion resistance than SS chain		Not lubed*7
		LSK	Non-lubricated in high-temperature environments; long life	–20 to 180	
	Surface-Treated Double Pitch Chain Surface-Treated RS Attachment Chain	NP	Environments requiring mild corrosion resistance	–10 to 150	Anti-rust pre-lube
		NEP	Exposed outdoor environments, exposure to seawater		
	Poly Steel Attachment Chain	PC	Environments requiring corrosion resistance and no lubrication	–20 to 80	Not lubed*7
	Plastic Roller Double Pitch Chain	—	Environments requiring lightweight and low-noise applications	–10 to 80	Volatile corrosion inhibitor
		NP			
		SS		–20 to 80	Not lubed*7
	Plastic Roller Double Pitch Chain Low-Noise Series (RPSN)	—	Even lower noise levels than engineering plastic rollers	–10 to 80	Volatile corrosion inhibitor
		NP			
		SS		–20 to 80	Not lubed*7
	Plastic Roller Double Pitch Chain KV Series (RPKV)	SS	Environments requiring heat and chemical resistance	–20 to 180	Not lubed*7
	Stainless Steel Hollow Pin Double Pitch Chain Stainless Steel Hollow Pin RS Chain	SS	Water immersion, acids/alkalis, and low-/hightemperature environments; conveyance by hollow attachment pin	–20 to 400	
Lube Free Small Size Conveyor Chain	Lambda Double Pitch Chain, Lambda RS Attachment Chain	LMC	Dimensionally interchangeable with general-use small size conveyor chain	–10 to 150	Volatile corrosion inhibitor
	BS Lambda Attachment Chain	LM	ISO 6060 B Series lube-free chain		
	X-Lambda Double Pitch Chain X-Lambda RS Attachment Chain	LMCX	Felt seal improves wear resistance	–10 to 60	
	Surface-Treated Lambda Double Pitch Chain Surface-Treated Lambda RS Attachment Chain	LMCNP	Nickel-plated (NP)	–10 to 150	
	Lambda RF Roller Chain	LMC	Lube-free chain with flat plates		
	Lambda Hollow Pin Double Pitch Chain Lambda Hollow Pin RS Chain	LMCHP	Uses special oil-impregnated sintered bushes for hollow pin bushes		
	Lambda KF Series Double Pitch Chain Lambda KF Series RS Attachment Chain	LMCKF	Uses heat-resistant lubrication	–10 to 230*2	
Special Small Size Conveyor Chain	Hollow Pin Double Pitch Chain, Hollow Pin RS Chain	HP	Conveyance by hollow attachment pin	–10 to 150	Anti-rust pre-lube
	Curved Double Pitch Chain, Curved RS Attachment Chain	CU	Curved conveyance		
Indexing Conveyor Chain	Bearing Bush Chain	NB	Zero wear elongation*3 (other than initial wear)	–10 to 150	Anti-rust pre-lube
		NBH			
		NBSS		–10 to 60	Not lubed*7
	Bearing Cage Chain	NC	Low-cost alternative to Bearing Bush Chain	–10 to 60	Anti-rust pre-lube
	Indexing Table Chain	—	For high-precision positioning	–10 to 60	Not lubed*7
	Mini Tact Chain	—	For high-precision positioning of small work	10 to 40	
Free Flow Chain	Double Plus Chain	—	2.5x speed	*5	Anti-rust pre-lube (plastic rollers: volatile corrosion inhibitor)*6
	Double Plus Chain with Snap Cover	—	2.5x speed; prevents small parts from falling into frame		
	Center Roller Chain	—	Same-speed conveyance	–10 to 150	
	Double Pitch Chain with Outboard Rollers RS Chain with Outboard Rollers	—	Free flow chain with outboard rollers	*5	
	Double Pitch Chain with Top Rollers RS Chain with Top Rollers	—	Free flow chain with top rollers		

*1: Includes additional RS attachment chains, 2-strand double pitch chain, and 2-strand RS attachment chain.
*2: Depending on your usage environment, you may need to multiply the allowable load by one of the factors listed on page 157, table 22 when selecting your chain.
*3: Wear elongation of Bearing Bush Chain (SS) is extremely small.

	Chain Size																		See Page
	Double Pitch Chain								RS Attachment Chain										
	2030	2040	2050	2060	2080	2100	2120	2160	25	35	40	50	60	80	100	120	140	160	
		●	●	●	●	●	●	●	●	●	●	●	●	●	●	●	●	●	
										●	●	●	●	●	●	●			25
											08B ●	10B ●	12B ●	16B ●	20B ●	24B ●			
		●	●	●	●	●	●	●	●	●	●	●	●	●	●	●	●	●	
		●	●	●	●						●	●	●	●					
		●	●	●	●						●	●	●	●					
		●	●	●	●				●	●	●	●	●	●					
		●	●	●							●	●	●						
		●	●	●	●	●	●	●	●	●	●	●	●	●	●	●	●	●	
		●	●	●	●	●					●	●	●	●	●				
									●	●	●	●	●						25
		●	●	●	●	●													
		●	●	●	●	●													
		●	●	●	●	●													
		●	●	●	●														
		●	●	●	●														
		●	●	●	●														
		●	●	●															
		●	●	●	●						●	●	●	●					
		●	●	●	●	●	●			●	●	●	●	●	●	●	●		
											08B ●	10B ●	12B ●	16B ●	20B ●	24B ●			
		●	●	●	●	●					●	●	●	●	●				
		●	●	●	●	●	●			●	●	●	●	●	●	●	●		39
											●	●	●	●	●	●	●		
		●	●	●	●						●	●	●	●					
		●	●	●	●						●	●	●	●					
		●	●	●	●						●	●	●	●					52
		●	●	●	●						●	●	●	●					
		●	●	●	●														
		●	●	●	●														
		●	●	●	●														
		●	●	●	●														79
	BC50S45 ●	BC50D45 ●	BC75S60 ●	BC75D60 ●	BC100S70 ●	BC100D70 ●	BC150S90 ●	BC150D90 ●											
	BCM12.5-9 ●	BCM15.0-9 ●																	
	●	●	●	●	●														
	●	●	●	●	●														
		●	●	●	●														87
		●	●	●	●	●					●	●	●	●	●				
		●	●	●	●	●					●	●	●	●	●				

*4: Use a lubricant suited to the operating temperature. (See page 170, table 27.)
*5: Differs according to chain series and roller type. Refer to the following pages: Page 100 for Double Plus chain, page 112 for outboard roller chain, page 121 for top roller chain.
*6: Volatile corrosion inhibitor is used for plastic roller chains and lubrication is applied to double plus steel roller chains and center roller chains.
*7: Oil adheres from assembly.

Ordering Small Size Conveyor Chain

To order small size conveyor chain, you need to specify chain size, series, attachment, length (number of links), and formation. The following pages show general ordering examples and points to keep in mind. For custom-made chains, please contact a Tsubaki representative.

1. Basic Structure of Model Numbers

When ordering, be sure to order by model number to avoid any errors in the chain main unit, attachments, and so on.
Refer to the individual product pages for chain size and other details.
Model numbering differs for Free Flow Chain. Refer to pages 92, 105, 106, and 114.

1. Chains

◆ Model numbering example: Double pitch chain

RF2060 R - NP - 1L A2 + 150L - JR - P **2** **H** (chain)

① ② ③ ④ ⑤ ⑥ ⑦ ⑧ Quantity Unit

◆ Model numbering example: RS attachment chain

RS80 - LMC - 2L K1 + 200L - JR - T **2** **H** (chain)

① ③ ④ ⑤ ⑥ ⑦ ⑧ Quantity Unit

2. Connecting Links, Offset Links

◆ Model numbering example: Connecting link

RF2060 - NP - A2 - JL **10** **K** (piece)

① ③ ⑤ ⑨ Quantity Unit

◆ Model numbering example: Offset link

RS80 - LMC - OL **5** **K** (piece)

① ③ ⑨ Quantity Unit

① Size	Indicates chain size. Double pitch chain **RF2○○○** RS attachment chain **RS○○**	
② Roller type	Indicates the type of roller.	See page 11
③ Series	Chain series code that combines material, heat treatment, and configuration.	Refer to the product page
④ Attachment spacing	Indicates the the spacing between the attachments.	See page 21
⑤ Attachment type	Indicates the type of attachment. ■ Attachment position can be specified as an inner link or an outer link only when the attachment spacing is an even number of links. In general, attachment will be on an outer link. When attaching an A2 attachment on outer links **A2** When attaching an A2 attachment on inner links **A2RL**	See page 21
⑥ Number of links	Specify the number of links. Chains are configured in standard-length units. If total length exceeds the unit length, units and fractional length will be supplied separately.	
⑦ End link	Indicates the configuration of the chain ends.	See page 18
⑧ Options	Indicates options available for meeting special user requirements.	See page 18
⑨ Part name	Enter the code for the part.	See page 11

	Connecting link		Offset link
	w/attachment	Plain	
Double pitch chain	**JL**		**OL**
RS attachment chain	**JL**	**PJL**	**POL**

2. End Links

Meaning of codes is as follows.
Connecting link: J (JK when preassembled)
Offset link: O (OK when preassembled)
Inner link: R

A side B side

Select the end link on the A side and B side of the specified chain from the table below.

No. of Links	End Link Code	A	B	End Link Code	A	B
Even number	**JR**			**JKR**		
Odd number	**RR**			**JJ**		
	JO			**JKJK**		
	JOK			**JKOK**		

Note: 1. Spring clips or cotter pins for JR, JO, and JJ links are not pre-assembled prior to shipping.
2. JOK connecting links do not have spring clips or cotter pins pre-assembled. Offset links are shipped pre-assembled to the chain.

3. Option Codes

Option Code	Option Name	Description
T	**Long-length formation**	As a general rule, if the specified number of links exceeds a standard unit length, we will make up the chain by splitting it into a standard length plus a fractional number of links. If you require a chain configured as a single unit, specify “long-length formation”. There is a limit to the length of the chain depending on the size of the chain and the shipping method. Contact a Tsubaki representative for details. There is no extra cost for this option. Note: Not applicable to Double Plus chain or Center Roller chain.
P	**Pre-stretched**	Chains will stretch a little from the start of use. This option mitigates this elongation. Additional fees apply.
H	**Half assembled in mirror image**	Attachments on a set of chains to be used in parallel are manufactured to be symmetrical. Page 20 shows examples when half assembled in mirror image is applied and when not. If you specify half assembled in mirror image, order an even number of chain strands. Additional fees apply. Note: 1. Not applicable to chains without attachments such as double pitch (without attachments) and Double Plus chains. 2. Not applicable to EP attachments.
2 **3** **4**	**Matched and tagged chain**	Deviations in chain length exist due to the manufacturing tolerances of the parts. When chains are to be used in parallel and minimizing the relative difference in the lengths is necessary, request a matched and tagged chain. Additional fees apply. 2: Two parallel strands. Place orders in a quantity multiplied by two. 3: Three parallel strands. Place orders in a quantity multiplied by three. 4: Four parallel strands. Place orders in a quantity multiplied by four. Note: RF roller chains in sizes from RF35 to RF60 cannot be matched and tagged if they are 610 mm or shorter.

Ordering Small Size Conveyor Chain

4. Ordering Examples

Small size conveyor chains are ordered by specifying model number and quantity.

1. Chains

➡ Ordering example

Ordering 10 pieces of 8-link RF2020 chain with S rollers

Model Number	Quantity
RF2080S+8L-JR	**10H**

Note: The product will be delivered without cotter pins preassembled.

X10H

2. Connecting Links

➡ Ordering example

Ordering 10 connecting links with A1 attachments for RS80 chain

Model Number	Quantity
RS80-A1-JL	**10K**

➡ Ordering example

Ordering 5 pieces of offset links for RF2060 chain

Model Number	Quantity
RF2060S-OL	**5K**

3. Chains (Stock Items, Standard Lengths)

Selected products are available as stock items in standard lengths (approx. 3 m). Stock items can be ordered in standard length units. Refer to the table below for applicable products and model numbers.

➡ Ordering example

Ordering 20 pieces of RS80 chain standard length units with A1 attachments on every link

Model Number	Quantity
RS80-1LA1-U	**20U**

■ Double Pitch Chain Stock Items

Size	Double Pitch				
	General Use			Other Series	
	S Roller		R Roller	S Roller	R Roller
RF2040	RF2040S-U		RF2040R-U	RF2040S-SS-U	RF2040R-SS-U
	RF2040S-1LA2-U	RF2040S-1LA1-U	RF2040R-1LA2-U	RF2040S-NP-U	RF2040R-NP-U
	RF2040S-2LA2-U		RF2040R-2LA2-U	RF2040S-LMC-U	
	RF2040S-1LK2-U	RF2040S-1LK1-U	RF2040R-1LK2-U	RF2040S-HP-U	RF2040R-HP-U
	RF2040S-2LK2-U		RF2040R-2LK2-U		
RF2050	RF2050S-U		RF2050R-U	RF2050S-SS-U	RF2050R-SS-U
	RF2050S-1LA2-U	RF2050S-1LA1-U	RF2050R-1LA2-U	RF2050S-NP-U	RF2050R-NP-U
	RF2050S-2LA2-U		RF2050R-2LA2-U	RF2050S-LMC-U	
	RF2050S-1LK2-U	RF2050S-1LK1-U	RF2050R-1LK2-U	RF2050S-HP-U	RF2050R-HP-U
	RF2050S-2LK2-U		RF2050R-2LK2-U		
RF2060	RF2060S-U		RF2060R-U	RF2060S-SS-U	RF2060R-SS-U
	RF2060S-1LA2-U	RF2060S-1LA1-U	RF2060R-1LA2-U	RF2060S-SS-1LA2-U	RF2060R-SS-1LA2-U
	RF2060S-2LA2-U		RF2060R-2LA2-U	RF2060S-SS-2LA2-U	RF2060R-SS-2LA2-U
	RF2060S-4LA2-U		RF2060R-4LA2-U	RF2060S-SS-4LA2-U	RF2060R-SS-4LA2-U
	RF2060S-1LK2-U	RF2060S-1LK1-U	RF2060R-1LK2-U	RF2060S-NP-U	RF2060R-NP-U
	RF2060S-2LK2-U		RF2060R-2LK2-U	RF2060S-LMC-U	RF2060R-LMC-U
				RF2060S-HP-U	RF2060R-HP-U
RF2080	RF2080S-U		RF2080R-U	RF2080S-SS-U	RF2080R-SS-U
	RF2080S-1LA2-U	RF2080S-1LA1-U	RF2080R-1LA2-U		RF2080RP-SS-U
	RF2080S-2LA2-U	RF2080S-2LA1-U	RF2080R-2LA2-U	RF2080S-NP-U	RF2080R-NP-U
	RF2080S-1LK2-U	RF2080S-1LK1-U	RF2080R-1LK2-U	RF2080S-HP-U	RF2080R-HP-U
	RF2080S-2LK2-U		RF2080R-2LK2-U		
RF2100	RF2100S-U		RF2100R-U		
	RF2100S-1LA2-U		RF2100R-1LA2-U		
	RF2100S-2LA2-U		RF2100R-2LA2-U		
	RF2100S-1LK2-U		RF2100R-1LK2-U		
	RF2100S-2LK2-U		RF2100R-2LK2-U		

■ RS Attachment Chain and RF Roller Chain Stock Items

Size	RS Attachment Chain			RF Roller Chain
	General Use		Other Series	
	Each Link	Every Other Link		
RS35			RS35-LMC-U	
RS40	RS40-1LA1-U	RS40-2LA1-U	RS40-LMC-U	RF40-U
	RS40-1LK1-U	RS40-2LK1-U	RS40-HP-U	RF40-LMC-U
RS50	RS50-1LA1-U	RS50-2LA1-U	RS50-LMC-U	RF50-U
	RS50-1LK1-U	RS50-2LK1-U	RS50-HP-U	RF50-LMC-U
RS60	RS60-1LA1-U	RS60-2LA1-U	RS60-LMC-U	RF60-U
	RS60-1LK1-U	RS60-2LK1-U	RS60-HP-U	RF60-LMC-U
RS80	RS80-1LA1-U	RS80-2LA1-U	RS80-SS-1LA1-U	RF80-U
	RS80-1LK1-U	RS80-2LK1-U	RS80-SS-1LK1-U	RF80-LMC-U
			RS80-HP-U	
RS100	RS100-1LA1-U	RS100-2LA1-U		
	RS100-1LK1-U	RS100-2LK1-U		

5. Half Assembled in Mirror Image, Double Row Chains

1. Variations in shipping form depending on whether or not chain is half assembled in mirror image

When half assembled in mirror image is not specified

Model number: RS80-LMC-3LA1+102L-JR Quantity: 2H
Packing A: 102L (link) x 2H (strand)

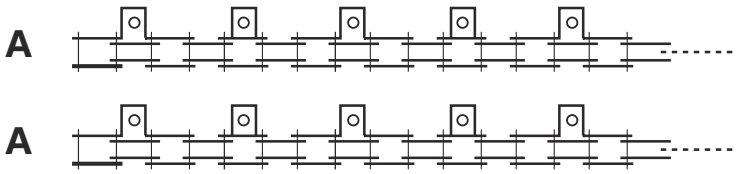

When half assembled in mirror image is specified

Model number: RS80-LMC-3LA1+102L-JR-H Quantity: 2H
Packing A: 102L (link) x 1H (strand)
A': 102L (link) x 1H (strand)

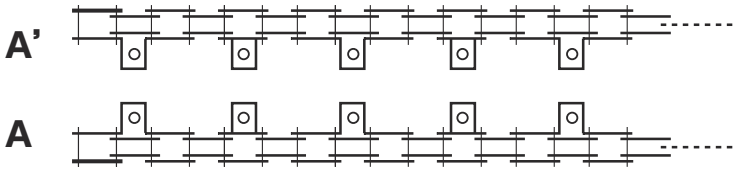

2. How to count the number of links in double row chain

Double row chains (two strands of chain with stay pins, etc. attached) are counted as a single unit.
One pitch of double row chain equals one link.

Example) Specs: Stay pin on each link
Quantity: 8 links = 8 links x 1 strand as shown in the figure below

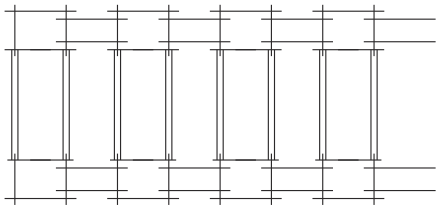

Note: Chains with stay pins (TN) are usually shipped with the stay pins separate.
Even when shipped disassembled, one pitch of double row chain is still one link.
Contact a Tsubaki representative regarding shipping the chain with stay pins pre-assembled.

Attachment Spacing and Description

Model Number	Attachment Spacing and Type	Diagram
RS40–1LA1 Connecting link **RS40–A1-JL**	1L A1	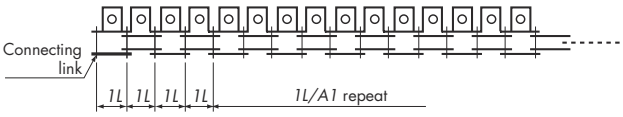
RS40–2LA1 Connecting link **RS40–A1–JL**	2L A1	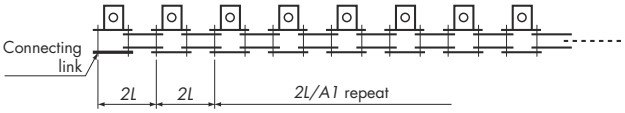
RS40–2LA1RL Connecting link **RS40–PJL**	2L A1RL	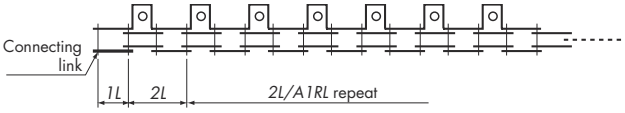 Attachment on inner link (RL)
RS40–3LA1 Connecting link **RS40–PJL**	3L A1	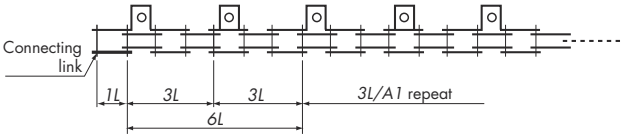
RS40–1L2LA1 Connecting link **RS40–A1–JL**	1L2L A1	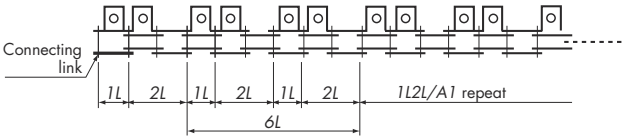
RS40–4LA1 Connecting link **RS40–PJL**	4L A1	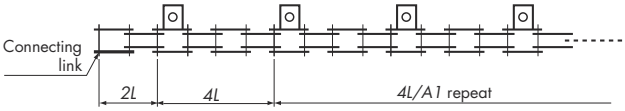

Model Number	Attachment Spacing and Type	Diagram
RS40-2L4LA1 Connecting link **RS40-PJL**	2L4L A1	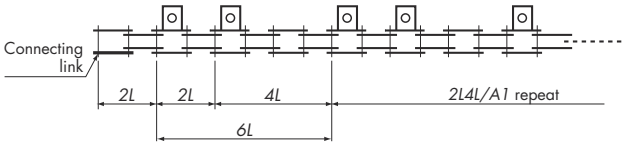
RS40-2L2L4LA1 Connecting link **RS40-PJL**	2L2L4L A1	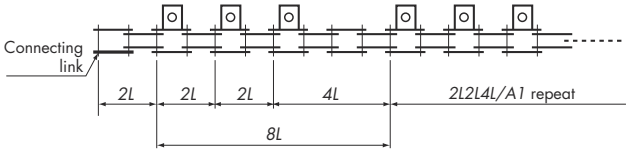
RS40-1LEP Connecting link **RS40-1LEP-JL**	1L EP	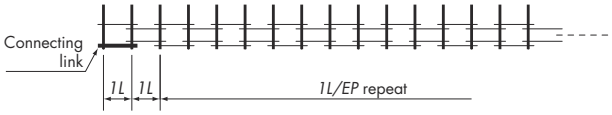
RS40-2LEP Connecting link **RS40-2LEP-JL**	2L EP	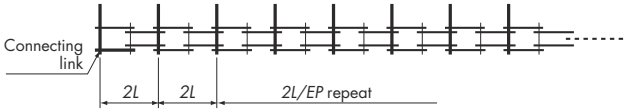
RS40-3LEP Connecting link **RS40-3LEP-JL**	3L EP	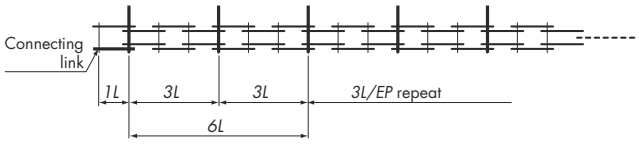
RS40-4LEP Connecting link **RS40-PJL**	4L EP	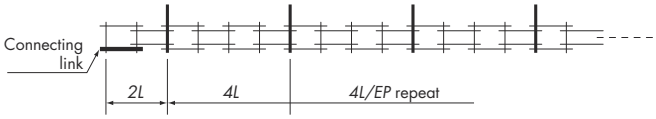

Note: 1. When attachment spacing is four (4) links or more, attachments are provided on the chain beginning at the outer link following the connecting link (CL).
2. If there is no repeatability in the spacing of the attachments, please use a schematic drawing to specify the chain formation.

MEMO

Ordering Sprockets

This page shows general ordering examples and points to keep in mind when ordering small size conveyor chain sprockets.

1. Basic Structure of Model Numbers

When ordering, be sure to order by model number to avoid any errors in sprocket specifications.
Refer to the product pages for sizes, processing/machining, and other details.

1. Double Pitch Sprockets

◆ Model numbering example: Standard pilot bore sprocket

RF2050 S - 1 B 912T - SS **2 K** (piece)

① ② ③ ④ ⑤ ⑥ Quantity Unit

◆ Model numbering example: S type Lock Sprocket

RF2060 R - 1 B 1200T - S4830A **2 K** (piece)

① ② ③ ④ ⑤ 1 Quantity Unit

◆ Model numbering example: Fit Bore Sprocket

RF2040 S - 1 B 1012T - SS - H30N-J08D2M06 **3 K** (piece)

① ② ③ ④ ⑤ ⑥ 2 Quantity Unit

2. RS Sprockets

◆ Model numbering example: Standard pilot bore sprocket

RS60 - 1 B 35T Q **1 K** (piece)

① ③ ④ ⑤ Q: Blank: Non-hardened teeth; **Q** : Hardened teeth Quantity Unit

① Size	Indicates chain size.	
② Roller type	Indicates the type of roller.	
③ Number of strands	Indicates the number of chain strands.	Refer to the product page
④ Hub type	Indicates the type of hub.	Refer to the product page
⑤ Number of teeth	Indicates the number of effective teeth for double pitch sprockets. **912T** means 9 1/2 teeth, and **1200T** means 12 teeth. Indicates the number of actual teeth for RS sprockets.	See pages 121 and 125
⑥ Material	Indicates sprocket material. [Blank]: Steel, **SS**: Stainless steel, **P**: Engineering plastic	See pages 121 and 125
1 Sleeve model	Indicates lock sleeve specifications and shaft bore diameter.	See page 123
2 Additional machining	Indicates the type of additional machining on the sprocket.	See pages 137 and 138

General Use/Corrosion Resistant Small Size Conveyor Chain

General Use Small Size Conveyor Chain

Double Pitch Chain

An attachment conveyor chain with double the pitch of RS Attachment Chain with a flat plate contour. Conforms to ISO 1275-A, ASME B29.100, and JIS B1803 standards.
1. High precision across the total length
2. Can use R or S rollers, allowing for use in various applications

RS Attachment Chain

Perfect for conveying small items with a small pitch on short conveyors (usually 10 m or less). Ideal for low-noise and other environment-friendly applications.

Stainless Steel Double Pitch / Stainless Steel RS Attachment Chain

Combinations of various materials allow these chains to be used in water and in corrosive atmospheres that are acidic or alkaline, as well as in special environments such as low and high temperatures. Double Pitch and RS Attachment Chains are available.
For further details, see page 159, Table 24 “Corrosion Resistance Guide for Corrosion Resistant Chains and Sprockets.”
Note: 1. Spring clips are 17-7 stainless steel and cotter pins are 18-8 stainless steel.
2. Caution! Certain chemicals at some concentrations may cause corrosion.

SS Series

Series Code: SS

1. Standard corrosion-resistant chain
2. Can be used in water and special atmospheres that are acidic or alkaline, and at low and high temperatures (–20°C to 400°C)
3. Marginally magnetic due to the cold-forming process
4. 18-8 stainless steel

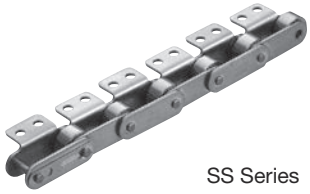

SS Series

HS Series

Series Code: HS

1. Ideal for when a longer-life stainless steel chain is needed (longer than with SS chain).
2. Maximum allowable load 1.8 times greater than SS chains
3. Corrosion resistance is slightly less than that of SS chains
4. Operating temperature range: –20°C to 150°C
5. Chain is magnetic
6. Pins, bushes, and S rollers are special stainless steel. Plates and R rollers are 18-8 stainless steel.

HS Series

NS Series

Series Code: NS

1. Used for applications that require higher corrosion resistance than SS chains
2. Can be used in water and special atmospheres that are acidic or alkaline, and at low and high temperatures (–20°C to 400°C)
3. All connecting links use cotter pins, regardless of chain size (except for RS25)
4. Base chain is 18-12 stainless steel
5. Cotter pins for RF2080 and RS80 chains are 18-8 stainless steel

AS Series

Series Code: AS

1. Corrosion resistance is slightly less than that of SS chains
2. Chain is magnetic
3. Pins and S rollers are precipitation hardened stainless steel. Plates, bushes, and R rollers are 18-8 stainless steel

LSK Series

Series Code: LSK

1. Ideal for when a longer-life stainless steel chain is needed (longer than with SS chain). Has 4 times the wear life of SS chain at ambient temperatures and 3 times the wear life of SS chain at 180°C (in-house tests)
2. Operating temperature range: –20°C to 180°C
3. Less initial elongation than SS chain reduces the need for maintenance
4. Marginally magnetic due to the cold-forming process
5. Base chain is 18-8 stainless steel. Bushes are a combination of 18-8 stainless steel and special engineering plastic

LSK Series

Surface-Treated Double Pitch / Surface-Treated RS Attachment Chain

A surface treatment has been applied to standard small size conveyor chain for improved corrosion resistance.
Double Pitch and RS Attachment Chains are available.

NP Series* — Series Code: NP

1. Nickel plating not only improves appearance but also adds a small degree of corrosion resistance. RoHS compliant. Can be used in applications where there is slight exposure to water.
2. Operating temperature range: –10°C to 150°C. Use a lubricant appropriate for the operating temperature. Refer to Table 27 on page 170.
3. Nickel plating on steel (all components heat-treated steel)

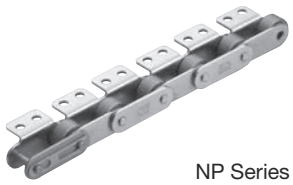
NP Series

NEP Series* — Series Code: NEP

1. Tsubaki's uniquely developed special coating and special resin coating provide superior saltwater, weather, alkaline chemical, and all-around corrosion resistance and excellent durability. Its revolutionary surface treatment is eco-friendly and contains no harmful chromium. RoHS compliant.
   Note: Contact a Tsubaki representative if using in a high-temperature steam environment.
2. Avoid using in conjunction with stainless steel sprockets at all possible costs
3. Operating temperature range: –10°C to 150°C. Use a lubricant appropriate for the operating temperature. Refer to Table 27 on page 170.
4. Special surface treatment on steel (all components heat-treated steel)

NEP Series

* Do not use NP and NEP chains if the chain will come in direct contact with food or where coating flakes or wear dust can contaminate food. Also, in non-food applications, appropriately cover the chain or contact a Tsubaki representative about chain selection if using in environments where coating flakes or wear dust present problems. Though nickel is not subject to the Japan Food Sanitation Act or the Industrial Safety and Health Act, plating on sliding parts can peel.

Poly Steel Attachment Chain — Series Code: PC

The combination of polyacetal inner links and 18-8 stainless steel outer link plates effectively incorporates the advantages of materials into one chain.
1. Lube-free and corrosion resistant
2. Low noise (approx. 5 dB less than standard steel chain)
3. Lightweight (approx. 50% less than standard steel chain)
4. Operating temperature range: –20°C to 80°C 5. Engineering plastic color: White
6. ANSI and BIS/DN chains are available

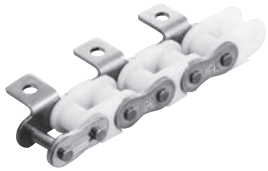

Note: PC-SY Series (Super Chemical Resistant) with better chemical resistance is available on request. Contact a Tsubaki representative.
Maximum allowable load of PC-SY chain is approximately 60% of that of PC chain.

Plastic Roller Double Pitch Chain — Roller Type: RP

1. Lightweight (approx. 30% less than steel chain)
2. Low noise (approx. 5 to 7 dB less than steel chain)
3. Low running resistance (approx. 30% less than steel chain)
4. Engineering plastic roller color: White (P)

Standard Series — Series Code: None

1. Engineering plastic rollers
2. Operating temperature range: –10°C to 80°C
3. Engineering plastic rollers (polyacetal) on steel base chain (heat-treated)

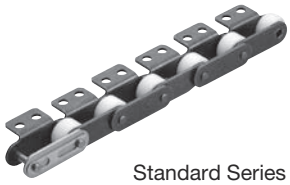
Standard Series

NP Series — Series Code: NP

1. Mild corrosion resistance
2. Operating temperature range: –10°C to 80°C
3. Parts are nickel-plated except for plastic rollers

SS Series — Series Code: SS

1. Corrosion resistant
2. Operating temperature range: –20°C to 80°C
3. Engineering plastic rollers (polyacetal) on 18-8 stainless steel base chain

NP Series

KV Series Heat-Resistant Plastic Roller Double Pitch Chain — Roller Type: RPKV

1. Excellent heat, chemical, and fire resistance. Conforms to the Japan Food Sanitation Act.
2. Super engineering plastic roller color: Black
3. Operating temperature range: –20°C to 180°C 4. Base chain is only available in SS series

Low-Noise Plastic Roller Double Pitch Chain — Roller Type: RPSN

1. Special engineering plastic rollers emit even less noise (–7 dB quieter) than standard engineering plastic rollers
2. Special engineering plastic roller color: Light cream
3. Base chain is available in standard, NP, and SS series
4. Operating temperature range: –10°C to 80°C (standard and NP series), –20°C to 80°C (SS series)

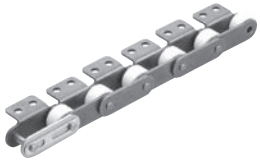

Double Pitch Chain

Base Chain

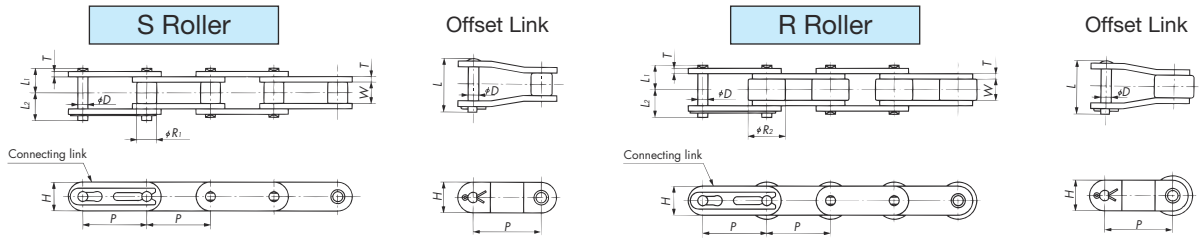

Attachments

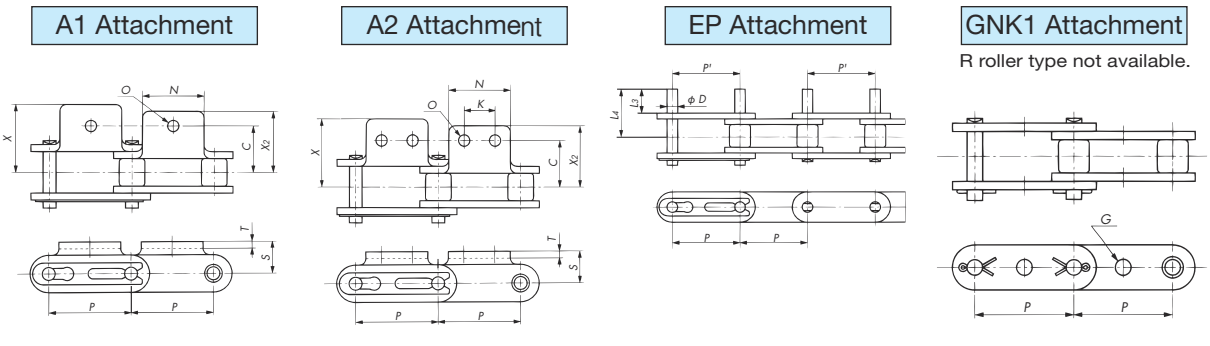

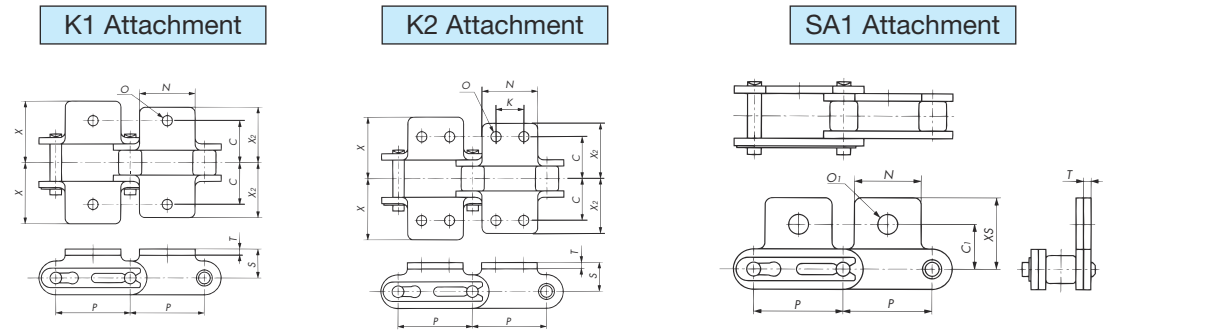

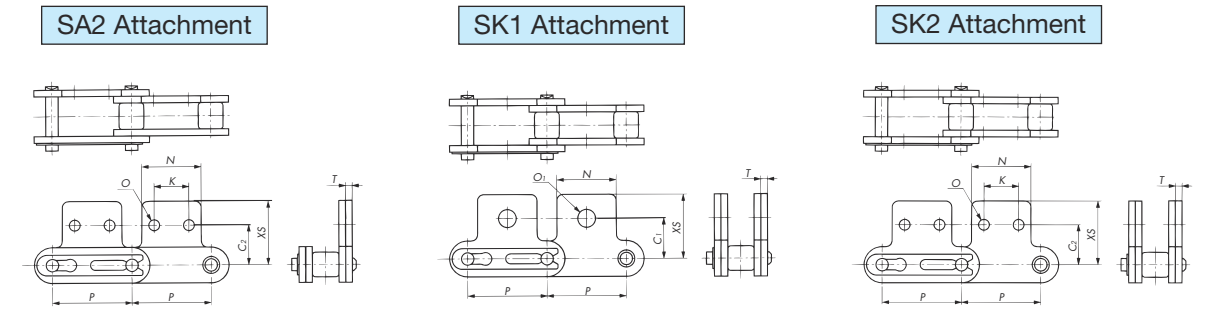

Note: 1. Connecting links of GNK1 attachments (all sizes) use cotter pins.
2. NS series use a cotter pin on the connecting link regardless of size. Contact a Tsubaki representative if a clip is needed.
3. Cotter pins are used on both sides of the offset link pin for stainless steel Double Pitch chain and plastic roller Double Pitch chain (SS series).
4. Attachments shown are S roller type. However, the dimensions for attachments are the same when R rollers are used. Also, the drawings show attachments added on every link.
5. RS sprockets can be used with S rollers if the sprocket has 30 or more teeth. A Double Pitch sprocket will be needed if the sprocket has fewer than 30 teeth.
6. Actual dimension *P'* may differ from *P*. Contact a Tsubaki representative for details.

Base Chain Dimensions

Size	Roller Type	Pitch P	Roller Dia. S Roller R_1	Roller Dia. R Roller R_2	Width Between Inner Link Plates W	Pin Dia. D	Pin L_1	Pin L_2	Offset Pin Length L	Plate Thickness T	Plate Width H	Approx. Mass kg/m Steel S Roller	Approx. Mass kg/m Steel R Roller	Approx. Mass kg/m Plastic Roller R Roller	No. of Links per Unit
RF2040	S·R	25.40	7.92	15.88	7.95	3.97 《3.56》	8.25 《8.0》	9.95 《9.2》	18.2 〈18.6〉 《18.5》	1.5	12.0	0.51	0.87	0.52	120
RF2050		31.75	10.16	19.05	9.53	5.09 《4.45》	10.30 《10.15》	12.0 《11.85》	22.6 〈23.9〉 《23.9》	2.0	15.0	0.84	1.30	0.83	96
RF2060		38.10	11.91	22.23	12.70	5.96 《5.09》	14.55 《14.35》	16.55 《15.95》	31.5 〈32.8〉 《32.0》	3.2	17.2	1.51	2.19	1.48	80
RF2080		50.80	15.88	28.58	15.88	7.94	※18.30	※20.90	※39.9 〈42.1〉	4.0	23.0	2.41	3.52	2.64	60
RF2100		63.50	19.05	39.69	19.05	9.54	21.80 〈22.30〉	24.50 〈24.90〉	47.5 〈50.0〉	4.8 〈5.0〉	28.6	3.54 〈3.66〉	5.80 〈 5.92〉	3.63 〈3.75〉	48
RF2120		76.20	22.23	44.45	25.40	11.11	26.95 〈28.05〉	30.55 〈31.75〉	59.0 〈63.5〉	5.6 〈6.0〉	34.4	5.08 〈5.37〉	8.13 〈 8.42〉	–	40
RF2160		101.60	28.58	57.15	31.75	14.29	33.95 〈35.70〉	38.45 〈41.10〉	74.1 〈81.3〉	7.15 〈8.0〉	48.2	8.96 〈9.84〉	13.70 〈14.58〉	–	30

Attachment Dimensions

Size	P'	C	C_1	C_2	K	N	O	O_1	S	X	X_2	XS	D	L_3	L_4	G	Additional Weight per Attachment kg A, SA	K, SK	EP
RF2040	Contact a Tsubaki representative for details.	12.7	11.1	13.6	9.5	19.1	3.6	5.2	9.1	19.3	17.6	19.8	3.97	9.5	16.75	4.1	0.003	0.006	0.001
RF2050		15.9	14.3	15.9	11.9	23.8	5.2	6.8	11.1	24.2	22.0	24.6	5.09	11.9	21.0	5.1	0.006	0.012	0.002
RF2060		21.45	17.5	19.1	14.3	28.6	5.2	8.7	14.7	31.5	28.2	30.6	5.96	14.3	27.45	6.1	0.017	0.034	0.003
RF2080		27.8	22.2	25.4	19.1	38.1	6.8	10.3	19.1	40.7	36.6	40.5	7.94	19.1	35.5	8.1	0.032	0.064	0.007
RF2100		33.35	28.6	31.8	23.8	47.6	8.7	14.3	23.4	49.9 〈50.8〉	44.9 〈45.3〉	50.4	9.54	23.8	43.4 〈43.9〉	10.1	0.060 〈0.063〉	0.120 〈0.126〉	0.012
RF2120		39.7	33.3	37.3	28.6	57.2	14.0	16.0	27.8	60.7 〈61.8〉	54.4 〈55.2〉	59.9	–	–	–	–	0.100 〈0.107〉	0.200 〈0.214〉	–
RF2160		52.4	44.5	50.8	38.1	76.2	18.0	22.0	36.5	77.8 〈80.35〉	70.0 〈71.65〉	78.6	–	–	–	–	0.203 〈0.227〉	0.400 〈0.454〉	–

Applicable Chain Sizes and Maximum Allowable Loads

Unit: kN{kgf}

Size	Double Pitch Chain (General Use)	Stainless Steel Double Pitch Chain SS Series	HS Series	AS Series	NS Series	LSK Series	Surface-Treated Double Pitch Chain NP Series	NEP Series	Plastic Roller Chain SP Roller
RF2040(S·R)	2.65{ 270}	0.69{ 70}	1.19{121}	0.69{ 70}	0.44{ 45}	0.44{ 45}	2.65{ 270}	2.65{ 270}	0.23{23}
RF2050(S·R)	4.31{ 440}	1.03{105}	1.85{189}	1.03{105}	0.69{ 70}	0.69{ 70}	4.31{ 440}	4.31{ 440}	0.34{35}
RF2060(S·R)	6.28{ 640}	1.57{160}	2.78{283}	1.57{160}	1.03{105}	1.03{105}	6.28{ 640}	6.28{ 640}	0.54{55}
RF2080(S·R)	10.7 {1090}	2.65{270}	4.77{486}	2.65{270}	1.77{180}	–	10.7 {1090}	10.7 {1090}	0.88{90}
RF2100(S·R)	17.1 {1740}	2.55{260}	–	–	–	–	17.1 {1740}	17.1 {1740}	–
RF2120(S·R)	23.9 {2440}	3.82{390}	–	–	–	–	23.9 {2440}	–	–
RF2160(S·R)	40.9 {4170}	6.37{650}	–	–	–	–	40.9 {4170}	–	–

Size	General-Use Plastic Roller Chain Standard Series	NP Series	SS Series	Low-Noise Plastic Roller Chain Standard Series	NP Series	SS Series	KV Series Plastic Roller Chain
RF2040R	0.44{ 45}	0.44{ 45}	0.44{ 45}	0.44{ 45}	0.44{ 45}	0.44{ 45}	0.44{ 45}
RF2050R	0.69{ 70}	0.69{ 70}	0.69{ 70}	0.69{ 70}	0.69{ 70}	0.69{ 70}	0.69{ 70}
RF2060R	1.03{105}	1.03{105}	1.03{105}	1.03{105}	1.03{105}	1.03{105}	1.03{105}
RF2080R	1.77{180}	1.77{180}	1.77{180}	1.77{180}	1.77{180}	1.77{180}	–
RF2100R	2.55{260}	2.55{260}	2.55{260}	–	–	–	–

Note: 1. Figures inside 〈 〉 are for stainless steel chain.
2. Offset pin length on RF2080 is 42.0 for AS series, 41.9 for NEP series, 42.7 for NS series, and 49.0 for RF2100 NEP series.
3. Figures inside 《 》 are for LSK series. EP dimensions (D, L3) on LSK differ from those on standard chain. When considering using EP attachments, contact a Tsubaki representative for details.
4. On NS series, dimension L1 is 18.70, L2 is 21.30, X is 41.1, and X2 is 36.35.
5. Connecting links of LSK series use cotter pins.
6. Dimensions O and O1 are slightly smaller on NEP series. Pin end diameter on NP and NEP series is slightly larger.
7. An EP attachment on NEP series has a different surface treatment from standard NEP series. It has lower corrosion resistance and no chemical resistance.
8. SS and NS series are not pre-lubricated before shipping. Always lubricate the chain before use, except when using underwater or when the chain will contact water. Using a chain without lubrication may result in premature articulation problems. Maximum allowable loads are based on lubricated (including water lubricated) conditions.
9. The above dimensions are nominal dimensions and may differ from actual dimensions.

RS Attachment Chain

Base Chain

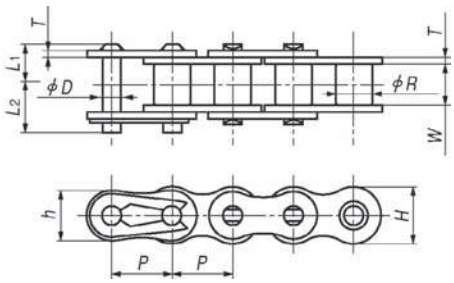

Offset Link

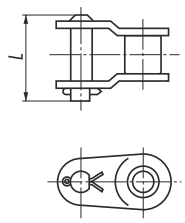

Attachments

A1 Attachment

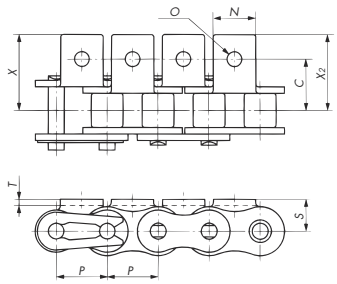

K1 Attachment

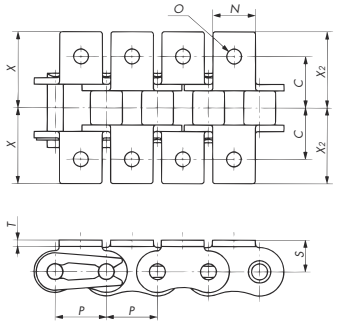

EP Attachment

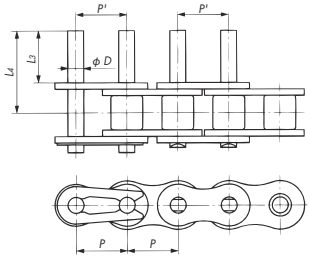

SA1 Attachment

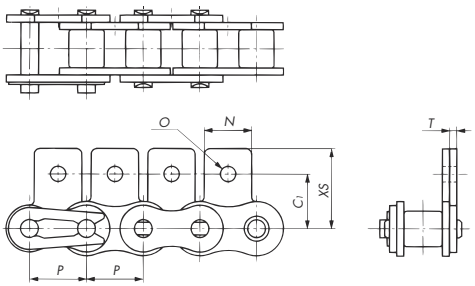

SK1 Attachment

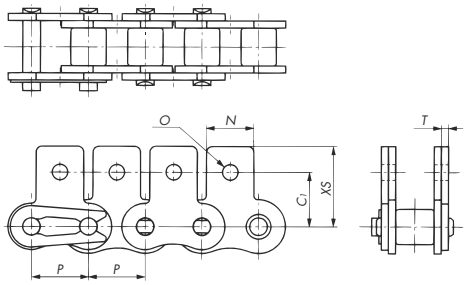

Note: 1. NS series use a cotter pin on the connecting link regardless of size (except for RS25).
2. Cotter pins are used on both sides of the offset link for stainless steel RS attachment chain.
3. RS25 chain uses 2-pitch offset links.
4. The drawings show attachments added on every link.
5. Actual dimension *P'* may differ from *P*. Contact a Tsubaki representative for details.

Base Chain Dimensions

Size	Pitch P	P'	Roller Dia. (Bush) R	Width Between Inner Link Plates W	Plate Thickness T	Plate Width H	Plate Width h	Pin Dia. D	Pin L1	Pin L2	Pin L	Approx. Mass kg/m	No. of Links per Unit
RS25	6.35	Contact a Tsubaki representative for details.	(3.30)	3.18	0.75	5.84	5.05	2.31	3.80	4.80	–	0.14	160
RS35	9.525		(5.08)	4.78	1.25	9.0	7.8	3.59	5.85	6.85	13.5 ⟨14.7⟩	0.33	320
RS40	12.70		7.92	7.95	1.5	12.0	10.4	3.97 ⟪3.56⟫	8.25 ⟪8.0⟫	9.95 ⟪9.2⟫	18.2 ⟨18.6⟩ ⟪18.5⟫	0.64	240
RS50	15.875		10.16	9.53	2.0	15.0	13.0	5.09 ⟪4.45⟫	10.30 ⟪10.15⟫	12.0 ⟪11.85⟫	22.6 ⟨23.9⟩ ⟪23.9⟫	1.04	192
RS60	19.05		11.91	12.70	2.4	18.1	15.6	5.96 ⟪5.09⟫	12.85 ⟪12.65⟫	14.75 ⟪14.25⟫	28.2 ⟨29.4⟩ ⟪28.6⟫	1.53	160
RS80	25.40		15.88	15.88	3.2	24.1	20.8	7.94	16.25	19.25 ⟨19.45⟩	36.6 ⟨39.0⟩	2.66	120
RS100	31.75		19.05	19.05	4.0	30.1	26.0	9.54	19.75	22.85	43.7 ⟨45.7⟩	3.99	96
RS120	38.10		22.23	25.40	4.8 ⟨5.0⟩	36.2	31.2	11.11	24.90 ⟨25.75⟩	28.90 ⟨29.80⟩	55.0 ⟨59.7⟩	5.93 ⟨6.13⟩	80
RS140	44.45		25.4	25.40	5.6 ⟨6.0⟩	42.2	36.4	12.71	26.90 ⟨28.15⟩	31.70 ⟨32.95⟩	59.5 ⟨66.2⟩	7.49 ⟨7.91⟩	68
RS160	50.80		28.58	31.75	6.4 ⟨7.0⟩	48.2	41.6	14.29	31.85 ⟨33.55⟩	36.85 ⟨38.55⟩	70.2 ⟨77.3⟩	10.10 ⟨10.86⟩	60

Attachment Dimensions

Size	C	C1	N	O	S	T	X	X2	XS	D	L3	L4	Additional Weight per Attachment kg A, SA	K, SK	EP
RS25	7.15	7.95	5.6	3.4	4.75	0.75	10.7	10.7	11.65	2.31	6.0	9.3	0.0003	0.0006	–
RS35	9.5	9.5	7.9	3.4	6.35	1.25	14.3	14.3	14.55	3.59	9.5	14.6	0.0008	0.0016	0.001
RS40	12.7	12.7	9.5	3.6	8.0	1.5	17.8	17.8	17.4	3.97	9.5	16.75	0.002	0.004	0.001
RS50	15.9	15.9	12.7	5.2	10.3	2.0	23.4	23.4	23.05	5.09	11.9	21.0	0.003	0.006	0.002
RS60	19.05	18.3	15.9	5.2	11.9	2.4	28.2	28.2	26.85	5.96	14.3	25.75	0.007	0.014	0.003
RS80	25.4	24.6	19.1	6.8	15.9	3.2	36.6	36.6	35.45	7.94	19.1	33.85	0.013	0.026	0.007
RS100	31.75	31.8	25.4	8.7	19.8	4.0	44.9	44.9	44.0	9.54	23.8	41.75	0.026	0.052	0.012
RS120	38.1	36.5	28.6	10.3	23.0	4.8 ⟨5.0⟩	55.8 ⟨56.7⟩	50.8 ⟨51.5⟩	52.9	11.11	28.6	51.4	0.044 ⟨0.046 ⟩	0.088 ⟨0.092 ⟩	0.020
RS140	44.5	44.5	34.9	11.9	28.6	5.6 ⟨6.0⟩	63.1 ⟨64.6⟩	57.2 ⟨58.0⟩	63.5	12.71	33.3	57.9	0.071 ⟨0.076 ⟩	0.142 ⟨0.152 ⟩	0.030
RS160	50.8	50.8	38.1	14.3	31.8	6.4 ⟨7.0⟩	71.8 ⟨73.7⟩	65.1 ⟨66.0⟩	70.1	14.29	38.1	67.45	0.097 ⟨0.106 ⟩	0.194 ⟨0.212 ⟩	0.045

Applicable Chain Sizes and Maximum Allowable Loads

Unit: kN{kgf}

Size	RS Attachment Chain (General Use)	Stainless Steel RS Attachment Chain: SS Series	HS Series	AS Series	NS Series	LSK Series (Stainless Steel Roller)	Surface-Treated RS Attachment Chain: NP Series	NEP Series	Plastic Roller Chain: SP Roller
RS25	0.64{ 65}	0.12{ 12}	–	–	0.12{ 12}	–	0.64{ 65}	–	–
RS35	1.52{ 155}	0.26{ 27}	–	–	0.26{ 27}	–	1.52{ 155}	–	–
RS40	2.65{ 270}	0.69{ 70}	1.19{121}	0.69{ 70}	0.44{ 45}	0.44{ 45}	2.65{ 270}	2.65{ 270}	0.23{23}
RS50	4.31{ 440}	1.03{105}	1.85{189}	1.03{105}	0.69{ 70}	0.69{ 70}	4.31{ 440}	4.31{ 440}	0.34{35}
RS60	6.28{ 640}	1.57{160}	2.78{283}	1.57{160}	1.03{105}	1.03{105}	6.28{ 640}	6.28{ 640}	0.54{55}
RS80	10.7 {1090}	2.65{270}	4.77{486}	2.65{270}	1.77{180}	–	10.7 {1090}	10.7 {1090}	0.88{89}
RS100	17.1 {1740}	3.82{390}	–	–	–	–	17.1 {1740}	17.1 {1740}	–
RS120	23.9 {2440}	3.82{390}	–	–	–	–	23.9 {2440}	–	–
RS140	32.4 {3300}	4.61{470}	–	–	–	–	32.4 {3300}	–	–
RS160	40.9 {4170}	6.37{650}	–	–	–	–	40.9 {4170}	–	–

Note: 1. Figures inside ⟨ ⟩ are for stainless steel chain.
2. Figures inside ⟪ ⟫ are for LSK series. EP dimensions (D, L3) on LSK differ from those on standard chain. When considering using EP attachments, contact a Tsubaki representative for details.
3. Connecting links of LSK series use cotter pins.
4. Dimensions O and O1 are slightly smaller on NEP series. Pin end diameter on NP and NEP series is slightly larger.
5. An EP attachment on NEP series has a different surface treatment from standard NEP series. It has lower corrosion resistance and no chemical resistance.
6. SS and NS series are not pre-lubricated before shipping. Always lubricate the chain before use, except when using underwater or when the chain will contact water. Using a chain without lubrication may result in premature articulation problems. Maximum allowable loads are based on lubricated (including water lubricated) conditions.
7. The above dimensions are nominal dimensions and may differ from actual dimensions.

Additional RS Attachment Chains

Chain No. p.17-18 | p.125~127 | p.15 | p.141-

Attachments

AA1 Attachment

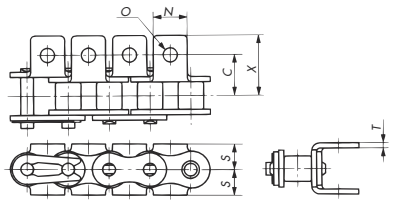

SAA1 Attachment

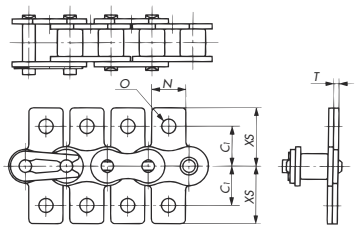

WA1, WA2 Attachment

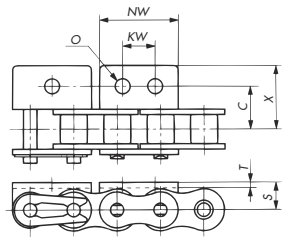

KK1 Attachment

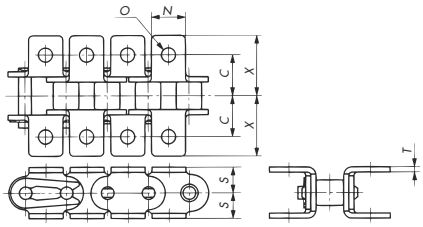

SKK1 Attachment

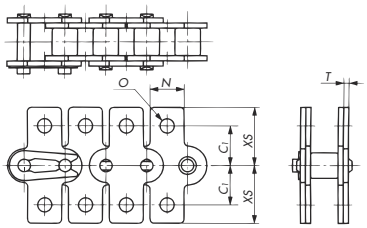

WSA1, WSA2 Attachment

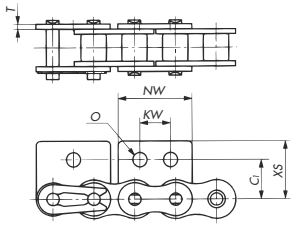

WK1, WK2 Attachment

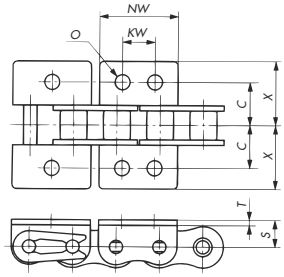

WSK1, WSK2 Attachment

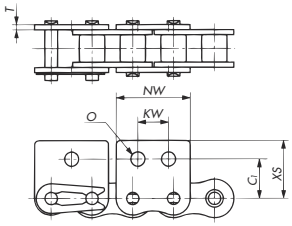

Attachment Dimensions

Size	Pitch	*C*	*C*1	*N*	*O*	*S*	*T*	*X*	*XS*	*NW*	*NW* (when on inner link; see Note 5 below)	*KW*	Additional Weight per Attachment kg			
													AA, SAA	KK, SKK	WA, WSA	WK, WSK
RS40	12.70	12.7	12.7	9.5	4.5	8.0	1.5	17.8	17.4	23.0	24.7	9.5	0.003	0.006	0.003	0.006
RS50	15.875	15.9	15.9	12.7	5.5	10.3	2.0	23.4	23.05	28.8	30.9	11.9	0.006	0.012	0.007	0.014
RS60	19.05	19.05	18.3	15.9	6.6	11.9	2.4	28.2	26.85	34.6	37.2	14.3	0.011	0.022	0.012	0.024
RS80	25.40	25.4	24.6	19.1	9.0	15.9	3.2	36.6	35.45	46.1	49.5	19.1	0.023	0.046	0.028	0.056
RS100	31.75	31.75	31.8	25.4	11.0	19.8	4.0	44.9	44.0	57.7	61.9	23.8	0.048	0.096	0.055	0.110

Note: 1. Base chain dimensions are the same as those of RS Attachment Chain.
2. Connecting links: RS40 to RS60 use spring clips. RS80 and RS100 use cotter pins.
3. Check sprocket hub dimensions to ensure that attachments AA, KK, SAA, and SKK will not make contact with the hub.
4. Check clearances between AA and KK attachments to ensure that no contact occurs on curved sections of the conveyor path.
5. In the table above, *NW* (when on inner link) refers to the case when attachments are provided on inner links.
6. The above dimensions are nominal dimensions and may differ from actual dimensions.

RF Roller Chain

Chain No. p.17-18 p.125-127 p.15 p.141-

RF Roller Chain is identical to RS Attachment Chain except that the link plates have flattened sides to allow conveyed materials to be placed directly on the chain.

■ Base Chain

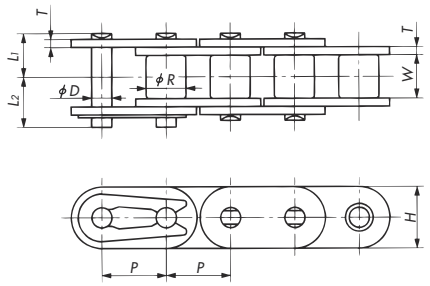

■ Base Chain Dimensions

Size	Pitch *P*	Roller Dia. *R*	Width Between Inner Link Plates *W*	Plate		Pin			Max. Allowable Load kN {kgf}	Approx. Mass kg/m	No. of Links per Unit
				Thickness *T*	Width *H*	Dia. *D*	L_1	L_2			
RF35	9.525	(5.08)	4.78	1.25	9.0	3.59	5.85	6.85	1.52{ 155}	0.41	320
RF40	12.70	7.92	7.95	1.5	12.0	3.97	8.25	9.95	2.65{ 270}	0.74	240
RF50	15.875	10.16	9.53	2.0	15.0	5.09	10.3	12.0	4.31{ 440}	1.22	192
RF60	19.05	11.91	12.70	2.4	18.1	5.96	12.85	14.75	6.28{ 640}	1.78	160
RF80	25.40	15.88	15.88	3.2	24.1	7.94	16.25	19.25	10.7 { 1090}	3.09	120
RF100	31.75	19.05	19.05	4.0	28.6	9.54	19.75	22.85	17.1 { 1740}	4.43	96
RF120	38.10	22.23	25.40	4.8	34.4	11.11	24.9	28.9	23.9 { 2440}	6.49	80

Note: 1. Roller diameter *R* (in parentheses) for RF35 is the bush diameter.
2. Offset links are not available.
3. Also available in Lambda specifications. Stainless steel specifications are made to order. Lambda chain and stainless steel chain cannot be connected to each other.
4. The above dimensions are nominal dimensions and may differ from actual dimensions.

BS Attachment Chain

The dimensions are fully interchangeable with existing BS/DIN standard chains used in equipment manufactured in Europe, without the need to replace sprockets.

■ Base Chain

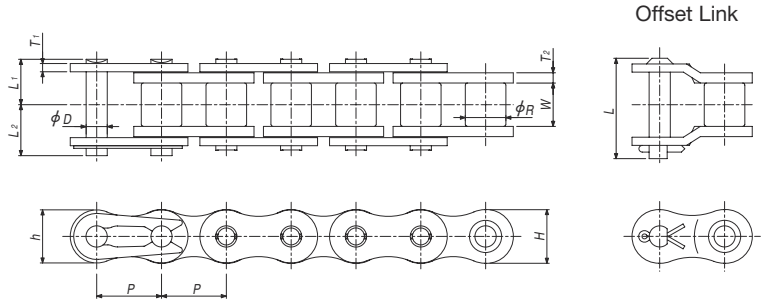

■ Attachments

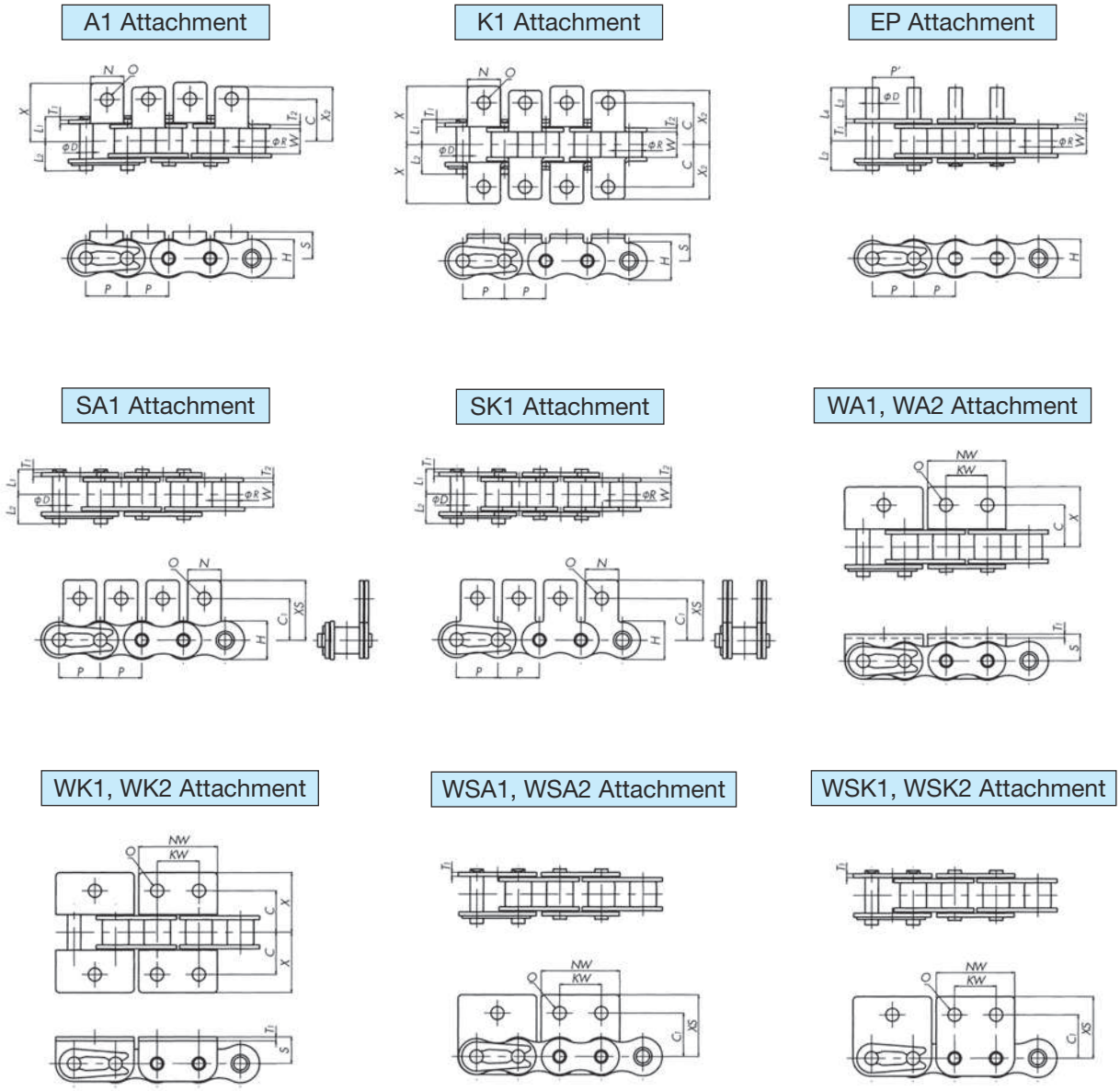

Note: 1. Actual dimension *P'* may differ from *P*. Contact a Tsubaki representative for details.
2. RF06B is RF type chain. Its shape differs from the above diagrams.

Base Chain Dimensions

Size	ISO No.	Pitch P	Roller Dia. R	Width Between Inner Link Plates W	Plate				Pin				Min. Tensile Strength kN {kgf}	Approx. Mass kg/m	No. of Links per Unit
					Thickness T_2	Thickness T_1	Width H	Width h	Dia. D	L_1	L_2	L			
RS06B	06B	9.525	6.35	5.72	1.3	1	8.2	8.2	3.28	6.1 ⟨6.5⟩	7.7 ⟨7.25⟩	14.5 ⟨15.45⟩	7.4{ 755}	0.40	320
RS08B	08B	12.70	8.51	7.75	1.6 ⟨1.5⟩	1.6 ⟨1.5⟩	12.0	10.4	4.45	8.4 ⟨8.35⟩	10.0 ⟨9.85⟩	18.6 ⟨20.05⟩	12.9{ 1320}	0.70	240
RS10B	10B	15.875	10.16	9.65	1.5	1.5	14.7	13.7	5.08	9.55	11.25	20.8 ⟨22.9⟩	15.7{ 1600}	0.95	192
RS12B	12B	19.05	12.07	11.68	1.8	1.8	16.1	16.1	5.72	11.1	13.0	24.4 ⟨26.7⟩	22.1{ 2250}	1.25	160
RS16B	16B	25.40	15.88	17.02	4.0	3.2	21.0	20.8	8.28	17.75	19.95	39.3 ⟨43.5⟩	60.0{ 6120}	2.70	120
RS20B	20B	31.75	19.05	19.56	4.4	3.4	26.0	26.0	10.19	19.9	23.1	46.6	95.0{ 9680}	3.85	96
RS24B	24B	38.10	25.40	25.40	6.0	5.6	33.4	31.2	14.63	26.65	31.85	61.7	160 {16300}	7.45	80

Attachment Dimensions

Size	A1, SA1, K1, SK1 Attachments								Additional Weight per Attachment kg	
	C	C_1	N	O	S	X	X_2	XS	A, SA	K, SK
RS06B	9.5	9.5	8.5	3.5	6.5	14.1	13.1	14.3	0.0006	0.0012
RS08B	11.9	12.7	11.4	4.2	8.9	19.05	17.15	19.3	0.002	0.004
RS10B	15.9	15.9	12.7	5.0	10.2	22.25	20.6	22.95	0.003	0.006
RS12B	19.05	22.2	16.5	7.1	13.5	29.85	27.85	32.05	0.006	0.012
RS16B	23.8	23.9	24.3	6.7	15.2	37.35	34.4	34.1	0.014	0.028
RS20B	31.75	31.8	25.4	8.7	19.8	44.85	41.6	44.0	0.024	0.048
RS24B	Contact a Tsubaki representative for details.									

Size	WA2, WSA2, WK2, WSK2 Attachments WA1, WSA1, WK1, WSK1 Attachments								EP Attachment				Additional Weight per Attachment kg		
	C	C_1	NW	O	S	X	XS	KW	P'	D	L_3	L_4	WA, WSA	WK, WSK	EP
RS06B	Contact a Tsubaki representative for details.												–	–	–
RS08B	12.7	13.1	24.6	4.9	8.9	20.3	20.7	12.7	Contact a Tsubaki representative for details.	4.45	9.5	17.0	0.005	0.010	0.001
RS10B	15.9	16.6	30.0	5.0	10.2	22.85	23.55	15.9		5.08	11.9	20.25	0.006	0.012	0.002
RS12B	17.45	17.6	34.8	5.5	11.4	25.65	25.75	19.1		5.72	14.3	24.1	0.009	0.018	0.003
RS16B	28.6	26.0	46.0	8.1	15.9	39.25	36.7	25.4		8.28	19.1	35.25	0.030	0.060	0.008
RS20B	Contact a Tsubaki representative for details.									10.19	23.8	42.0	–	–	–
RS24B	Contact a Tsubaki representative for details.												–	–	–

Note: 1. Single-strand chains in sizes RS08B through RS16B use easy disassembly pins (with center sink riveting). All other sizes, including 2-strand chains, use double-sided riveting.
2. Minimum tensile strength and maximum allowable load are not the same thing. Refer to page 8.
3. Contact a Tsubaki representative regarding chain selection.
4. When replacing a chain that has made-in-Europe standard attachments with Tsubaki attachment chain, be sure to check attachment dimensions in advance, since Tsubaki standard dimensions may differ from European dimensions.
5. Tsubaki can manufacture special attachments and special extended pins, as well as RF06B attachment chain. Please inquire for details.
6. Stainless steel (SS series) and Lambda chains are also available. Please inquire for details. Note, however, that SS series and Lambda chain cannot be connected to each other.
7. The figures inside ⟨ ⟩ are for SS series.
8. Minimum tensile strength is for general-purpose chain and differs from the strength of stainless steel chain. Contact a Tsubaki representative for details.
9. The above dimensions are nominal dimensions and may differ from actual dimensions.

Double Pitch Chain 2-Strand

Chain No. p.17-18 | p.129-130 | p.15 | p.141-

Base Chain

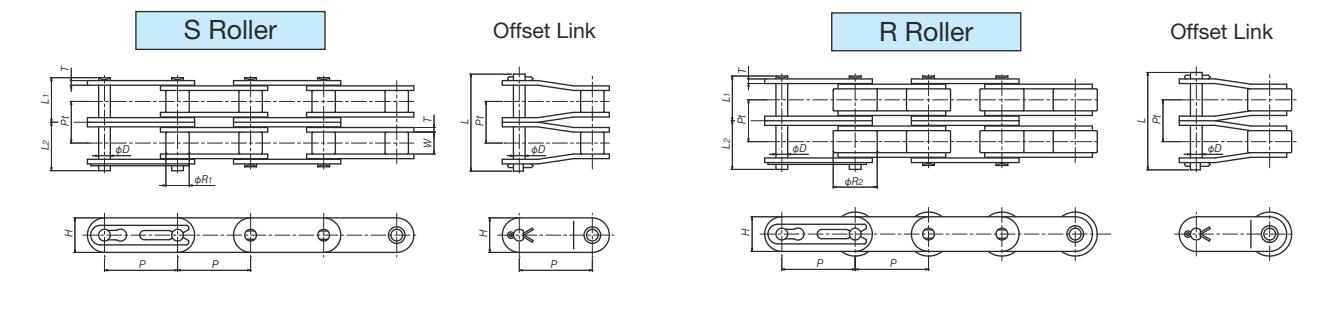

Attachments

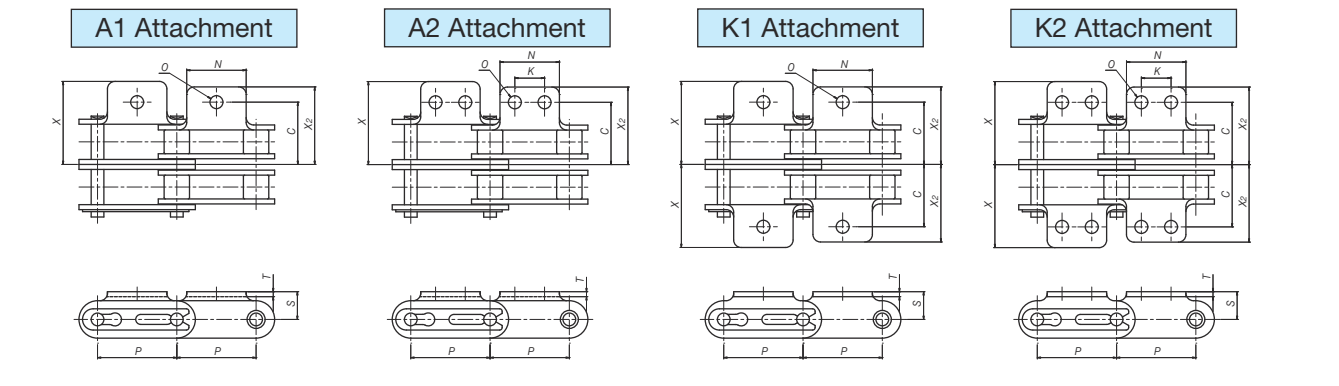

Base Chain Dimensions

Size	Roller Type	Pitch *P*	Roller Dia. S Roller R_1	Roller Dia. R Roller R_2	Width Between Inner Link Plates *W*	Transverse Pitch *Pt*	Pin Dia. *D*	Pin L_1	Pin L_2	Pin *L*	Plate Thickness *T*	Plate Width *H*	Max. Allowable Load kN {kgf}	Approx. Mass kg/m S Roller	Approx. Mass kg/m R Roller	No. of Links per Unit
RF2040-2	S・R	25.40	7.92	15.88	7.95	14.40	3.97	15.45	17.15	33.5	1.5	12.0	4.50 { 460}	1.02	1.74	120
RF2050-2		31.75	10.16	19.05	9.53	18.10	5.09	19.35	21.15	41.8	2.0	15.0	7.34 { 750}	1.68	2.60	96
RF2060-2		38.10	11.91	22.23	12.70	26.22	5.96	27.7	29.6	59.5	3.2	17.2	10.7 {1090}	3.02	4.38	80
RF2080-2		50.80	15.88	28.58	15.88	32.60	7.94	34.6	37.2	74.6	4.0	23.0	18.2 {1860}	4.82	7.04	60
RF2100-2		63.50	19.05	39.69	19.05	39.10	9.54	41.4	44.1	87.9	4.8	28.6	29.0 {2960}	7.08	11.60	48

Attachment Dimensions

Size	*C*	*K*	*N*	*O*	*S*	*X*	X_2	*D*	Additional Weight per Attachment kg A	Additional Weight per Attachment kg K
RF2040-2	19.9	9.5	19.1	3.6	9.1	26.50	24.80	3.97	0.003	0.006
RF2050-2	24.95	11.9	23.8	5.2	11.1	33.25	31.05	5.09	0.006	0.012
RF2060-2	34.55	14.3	28.6	5.2	14.7	44.6	41.3	5.96	0.017	0.034
RF2080-2	44.1	19.1	38.1	6.8	19.1	57.00	52.90	7.94	0.032	0.064
RF2100-2	52.9	23.8	47.6	8.7	23.4	69.45	64.45	9.54	0.060	0.120

Note: 1. Also available in Lambda, SS, and NP specifications. Contact a Tsubaki representative for details.
2. On RF2040 and RF2050 size chains, RS sprockets can be used with S rollers if the sprocket has 30 or more teeth. Sizes RF2060 or above have different *Pt* (transverse pitch) dimensions and thus are made-to-order. Contact a Tsubaki representative for details.
3. R rollers require special sprockets. Contact a Tsubaki representative for details.
4. The above dimensions are nominal dimensions and may differ from actual dimensions.

RS Attachment Chain 2-Strand

Base Chain

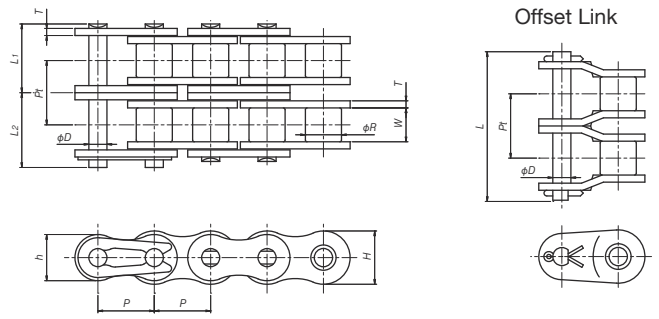

Attachments

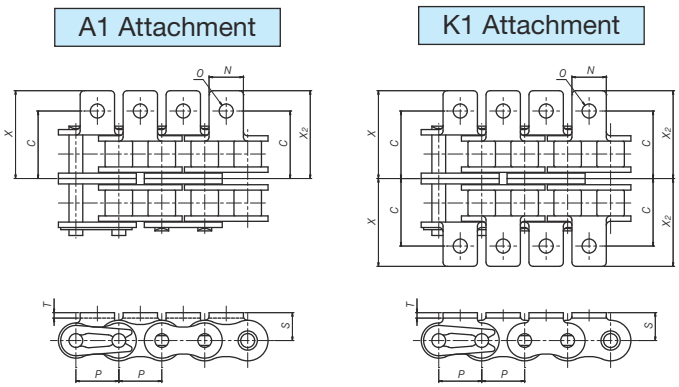

Base Chain Dimensions

Size	Pitch P	Roller Dia. R	Width Between Inner Link Plates W	Transverse Pitch Pt	Plate Thickness T	Plate Width H	Plate Width h	Pin Dia. D	Pin L1	Pin L2	Pin L	Max. Allowable Load kN {kgf}	Approx. Mass kg/m	No. of Links per Unit
RS40-2	12.70	7.92	7.95	14.4	1.5	12.0	10.4	3.97	15.45	17.15	33.5	4.50 { 460}	1.27	240
RS50-2	15.875	10.16	9.53	18.1	2.0	15.0	13.0	5.09	19.35	21.15	41.8	7.34 { 750}	2.07	192
RS60-2	19.05	11.91	12.70	22.8	2.4	18.1	15.6	5.96	24.25	26.25	52.6	10.7 {1090}	3.04	160
RS80-2	25.40	15.88	15.88	29.3	3.2	24.1	20.8	7.94	30.9	33.9	67.5	18.2 {1860}	5.27	120
RS100-2	31.75	19.05	19.05	35.8	4.0	30.1	26.0	9.54	37.7	40.8	81.5	29.0 {2960}	7.85	96

Attachment Dimensions

Size	C	N	O	S	T	X	X2	Additional Weight per Attachment kg A	Additional Weight per Attachment kg K
RS40-2	19.9	9.5	3.6	8.0	1.5	25.00	25.00	0.002	0.004
RS50-2	24.95	12.7	5.2	10.3	2.0	32.45	32.45	0.003	0.006
RS60-2	30.45	15.9	5.2	11.9	2.4	39.60	39.60	0.007	0.014
RS80-2	40.05	19.1	6.8	15.9	3.2	51.25	51.25	0.013	0.026
RS100-2	49.65	25.4	8.7	19.8	4.0	62.80	62.80	0.026	0.052

Note: 1. Also available in Lambda, SS, and NP specifications. Contact a Tsubaki representative for details.
2. RS sprockets can be used.
3. The above dimensions are nominal dimensions and may differ from actual dimensions.

Poly Steel Attachment Chain

Base Chain

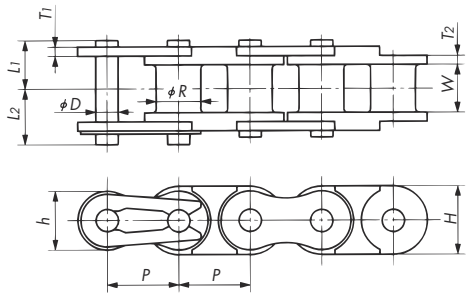

Attachments

A1 Attachment

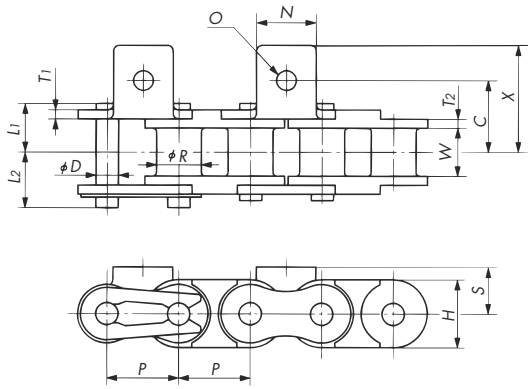

SA1 Attachment

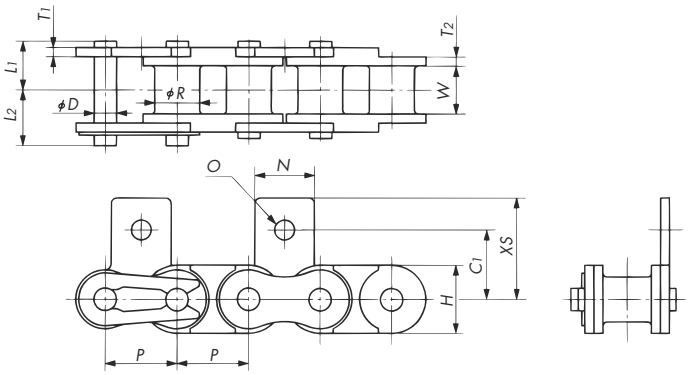

K1 Attachment

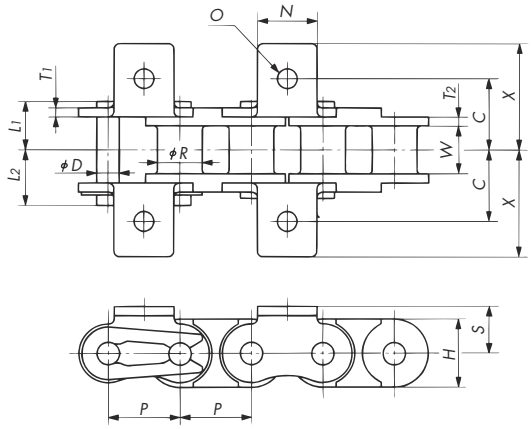

SK1 Attachment

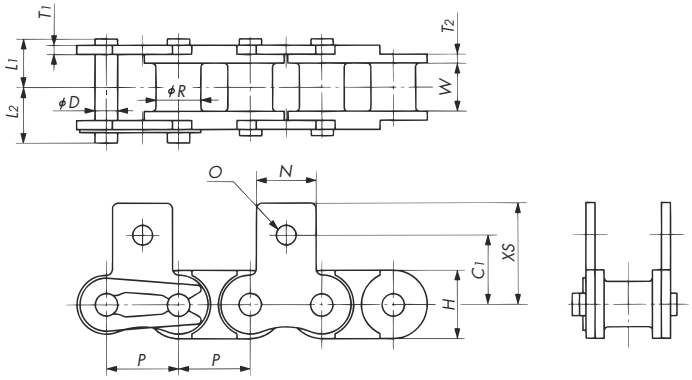

EP Attachment

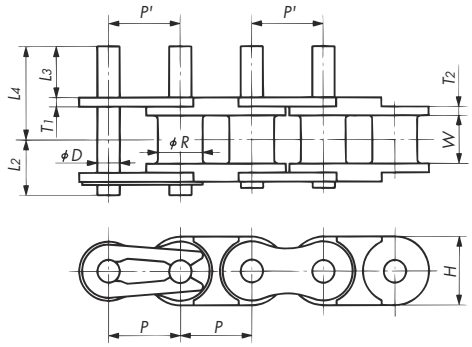

Note: 1. Pin ends on the base chain are not riveted.
2. The rivets on the connecting links are double-sided on RS25, not riveted on RS35, and round on RS40 to RS60.
3. EP attachment's actual dimension *P'* may differ from *P*. Contact a Tsubaki representative for details.
4. Drawing shows attachments added on every link.

■ Base Chain Dimensions

Size & Type	Pitch P	Bush Dia. R	Width Between Inner Link Plate W	Plate				Pin			Max. Allowable Load kN{kgf}	Approx. Mass kg/m	No. of Links per Unit
				Thickness T_1	Thickness T_2	Width H	Width h	Dia. D	L_1	L_2			
RS25-PC	6.35	3.30	3.18	0.75	1.3	6.0	5.05	2.31	4.5	5.5	0.08{ 8}	0.095	160
RS35-PC	9.525	5.08	4.78	1.25	2.2	9.0	7.8	3.59	6.85	7.85	0.18{18}	0.22	320
RS40-PC	12.70	7.92	7.95	1.5	1.5	12.0	10.4	3.97	8.25	9.95	0.44{45}	0.39	240
RS50-PC	15.875	10.16	9.53	2.0	2.0	15.0	13.0	5.09	10.3	12.0	0.69{70}	0.58	192
RS60-PC	19.05	11.91	12.70	2.4	2.4	18.1	15.6	5.96	12.85	14.75	0.88{90}	0.82	160

■ Attachment Dimensions

Size & Type	C	C_1	N	O	S	X	XS	L_3	L_4	Additional Weight per Attachment kg		
										A, SA	K, SK	EP
RS25-PC	7.95	7.95	5.6	3.4	4.75	11.45	11.65	6.0	10.0	0.0003	0.0006	0.0002
RS35-PC	10.5	9.5	7.9	3.4	6.35	15.35	14.55	9.5	15.65	0.0008	0.0016	0.0007
RS40-PC	12.75	12.7	9.5	3.6	8.0	17.8	17.4	9.4	16.75	0.002	0.004	0.001
RS50-PC	16.0	15.9	12.7	5.2	10.3	23.5	23.05	11.8	21.0	0.003	0.006	0.002
RS60-PC	19.15	18.3	15.9	5.2	11.9	28.3	26.85	14.2	25.75	0.007	0.014	0.003

Note: 1. Poly Steel Chain in BS specifications is made-to-order. Contact a Tsubaki representative for details. Available sizes: RS08B-PC, RS10B-PC, RS12B-PC
2. Poly Steel Attachment Chains use special connecting links. Model numbering example: RS40-PC-A1-JL
3. When replacing stainless steel RS Attachment Chain (SS series) with Poly Steel Attachment Chain, check the chain tension. Poly Steel Attachment Chain tension should be less than the maximum allowable load.
4. Attachments other than EP attachments cannot be installed on inner links and will be attached to even-numbered outer links.
5. Offset links are not available. Chains should be designed with an even number of links.
6. The above dimensions are nominal dimensions and may differ from actual dimensions.

◆ How to Set Poly Steel Chain on the Guide Rail

For Poly Steel Chain, the underside of the inner link should be supported by the guide rail.

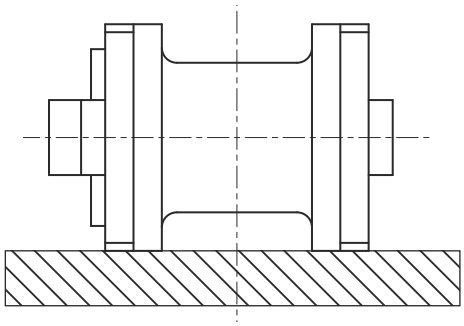

Lube Free Small Size Conveyor Chain

LAMBDA Small Size Conveyor Chain

Series Code: LMC

Tsubaki is a pioneer in the industry, being the first to develop a chain that uses special oil-impregnated bushes. Since first being introduced in 1988, Lambda Chain has gained an outstanding reputation in a variety of industries and applications. It is capable of meeting a wide range of customer needs for long life in a lubrication-free environment, resulting in a reduction in overall long-term costs.

- ◆ Long life without additional lubrication... Special oil-impregnated bushes provide long service life.
- ◆ Uses NSF-H1 food grade oil in its special oil-impregnated bushes.
- ◆ Interchangeability... Compatible with general-use small sze conveyor chain.
- ◆ Operating temperature range: −10°C to 150°C

Basic Construction

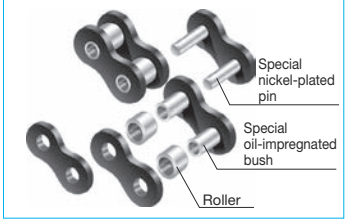

Note: Lambda drive chains have different dimensions.

Long Life LAMBDA Chain (X-Λ [X-Lambda])

Series Code: LMCX

The inclusion of an oil-impregnated felt seal in the construction of X-Λ (X-Lambda) Chain significantly improves the anti-wear performance of standard Lambda Chain. Ideal for environments where extended replacement intervals are required when using lube-free chain.

- ◆ Ultra long life in a lube-free chain… The combination of a special oil-impregnated bush and felt seal further extends service life.
- ◆ Uses NSF-H1 food grade oil in its special oil-impregnated bushes.
- ◆ Interchangeability… Fully interchangeable with Lambda Chain. However, as the overall pin length is longer than Lambda Chain, please check that this will not cause interference with machinery or other equipment.
- ◆ Operating temperature range: −10°C to 60°C

Basic Construction

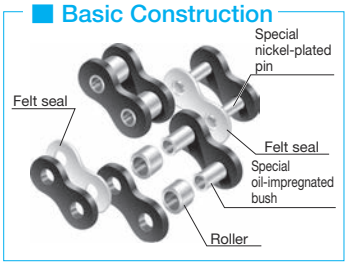

KF Series LAMBDA Chain

Series Code: LMCKF

Our special lubricant, which is resistant to volatilization and degradation even in high-temperature environments (150°C to 230°C), brings out maximum wear resistance in the chain, especially in high-temperature ranges. The special oil-impregnated bushes use NSF-H1 food grade oil.

- ◆ Operating temperature range: −10°C to 230°C

> ⚠ Do not use in environments over 230°C. This will lead to a serious decrease in wear life.
> Harmful gases may be emitted in temperatures over 280°C.

Wear Elongation Comparison

We did in-house tests to compare wear elongation on different types of RS50 size chain. Chain life will vary depending on usage conditions.

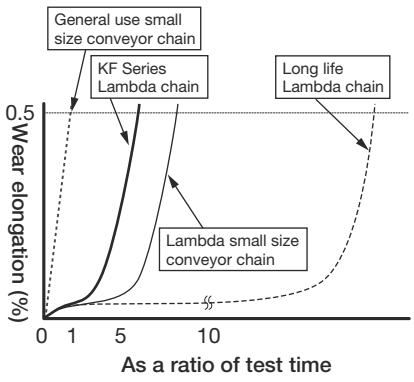

In-house test; normal temperatures (−10°C to 60°C)

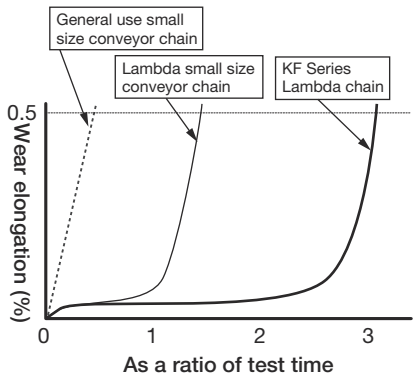

In-house test; 150°C environment

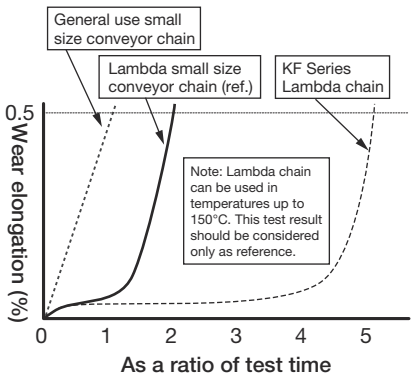

In-house test; 230°C environment

Wide Variety of LAMBDA Small Size Conveyor Chain

Lambda Double Pitch Chain
Lambda RS Attachment Chain

Inner and outer link plates are blackened. This treatment provides better corrosion resistance, as well as improving the overall appearance of the chain.

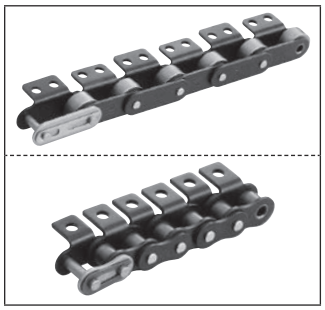

➡ Lambda Small Size Conveyor Chain — Series Code: LMC

➡ Long Life Lambda Chain — Series Code: LMCX

➡ KF Series Lambda Chain — Series Code: LMCKF

Surface-Treated Lambda Double Pitch Chain
Surface-Treated Lambda RS Attachment Chain

Series Code: LMCNP

Standard Lambda Chain with anti-corrosion surface treatments.
LMCNP:
Nickel-plated plates and rollers provide mild corrosion resistance.

Lambda Hollow Pin Double Pitch Chain
Lambda Hollow Pin RS Attachment Chain

Series Code: LMCHP

Hollow pin chain with all the features of Lambda chain. Special oil-impregnated sintered bushes are used for hollow pin bushes.

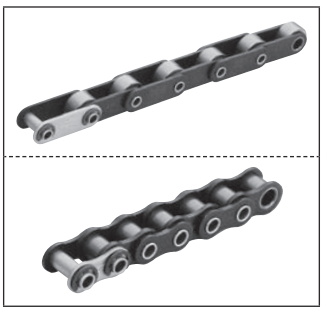

Lambda RF Roller Chain

Series Code: LMC

RF roller chain with all the features of Lambda chain. Designed for lubrication-free applications where conveyed objects are placed directly on the chain.

BS Lambda Attachment Chain

Series Code: LM

Lambda chain that conforms to ISO 606 B series standards. The dimensions are fully interchangeable with existing BS chains. Specially shaped pins are used on single-strand 08B to 16B sizes to enable easy chain disassembly using a standard chain breaker.

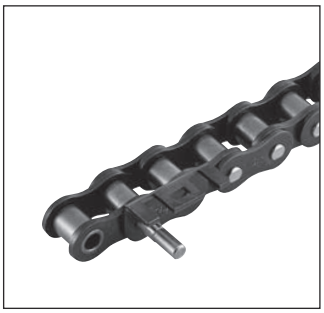

Free Flow Lambda Chain

Series Code: LMC

➡ Double Plus Lambda Chain
➡ Lambda Outboard Roller Chain
➡ Lambda Top Roller Chain

Outboard roller chain and top roller chain that have lube-free Lambda rollers are also available.

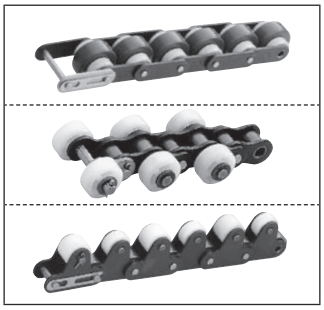

Lambda Chain Specialty Attachments

We can manufacture various attachments to suit your needs, and deliver them quickly.

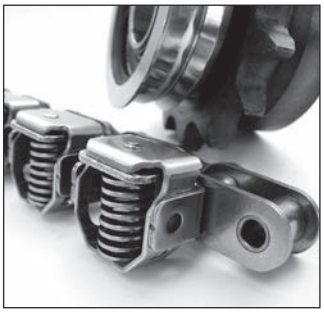

⚠ Safety Precautions for Lambda Chains

1. Do not use Lambda chain if the chain will come in direct contact with food or where coating flakes or wear dust can contaminate food. Also, in non-food applications, appropriately cover the chain or contact a Tsubaki representative about chain selection if using in environments where coating flakes or wear dust present problems. Though nickel is not subject to the Japan Food Sanitation Act or the Industrial Safety and Health Act, plating on sliding parts can peel.
2. Do not use Lambda chain where there is the possibility of exposure to chemicals, water, or cleaning/degreasing vapors.
3. Impregnated oil may spatter depending on usage conditions.
4. Be aware that non-NSF-H1 anti-rust agent and assembly lube from the manufacturing process may be present on the chain.

LAMBDA Double Pitch Chain

Base Chain

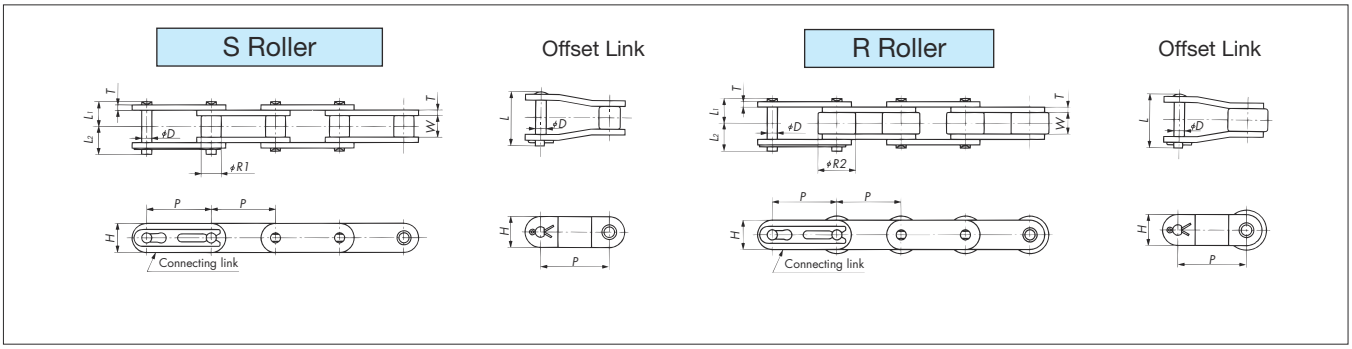

Attachments

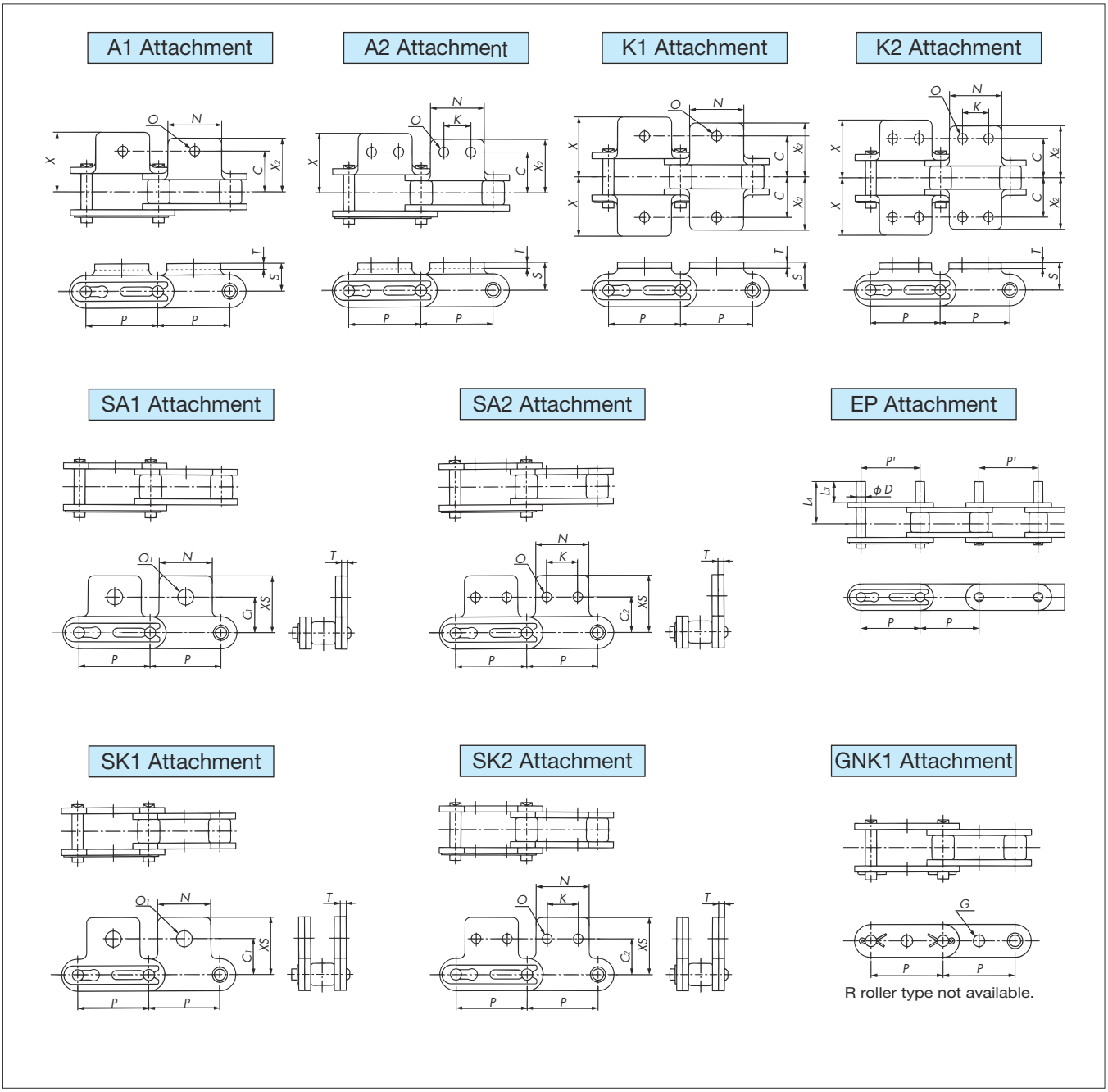

Note: 1. GNK1 attachments (all sizes) use cotter pins.
2. Attachments shown are S roller type. However, the dimensions for attachments are the same when R rollers are used. Also, the drawings show attachments added on every link.
3. RS sprockets can be used with S rollers if the sprocket has 30 or more teeth. A Double Pitch sprocket will be needed if the sprocket has fewer than 30 teeth.
4. Actual dimension *P'* may differ from *P*. Contact a Tsubaki representative for details.

Base Chain Dimensions

Size & Series	Roller Type	Pitch P	P'	Width Between Inner Link Plates W	Roller Dia. S Roller R_1	Roller Dia. R Roller R_2	Pin Dia. D	Pin L_1	Pin L_2	Offset Pin Length L	Plate Thickness T	Plate Width H
RF2040-LMC	S・R	25.40	Contact a Tsubaki representative for details.	7.95	7.92	15.88	3.97	8.25	9.95	18.2	1.5	12.0
RF2050-LMC		31.75		9.53	10.16	19.05	5.09	10.30	12.0	22.6	2.0	15.0
RF2060-LMC		38.10		12.70	11.91	22.23	5.96	14.55	16.55	31.5	3.2	17.2
RF2080-LMC		50.80		15.88	15.88	28.58	7.94	18.30	20.90	39.9	4.0	23.0
RF2100-LMC		63.50		19.05	19.05	39.69	9.54	21.80	24.50	47.5	4.8	28.6
RF2120-LMC		76.2		25.4	22.23	25.40	11.11	26.95	30.55	59.0	5.6	34.4

Attachment Dimensions

Size & Series	Attachment C	C_1	C_2	K	N	O	O_1	S	T	X	X_2	XS	D	L_3	L_4	G
RF2040-LMC	12.7	11.1	13.6	9.5	19.1	3.6	5.2	9.1	1.5	19.3	17.6	19.8	3.97	9.5	16.75	4.1
RF2050-LMC	15.9	14.3	15.9	11.9	23.8	5.2	6.8	11.1	2.0	24.2	22.0	24.6	5.09	11.9	21.0	5.1
RF2060-LMC	21.45	17.5	19.1	14.3	28.6	5.2	8.7	14.7	3.2	31.5	28.2	30.6	5.96	14.3	27.45	6.1
RF2080-LMC	27.8	22.2	25.4	19.1	38.1	6.8	10.3	19.1	4.0	40.7	36.6	40.5	7.94	19.1	35.5	8.1
RF2100-LMC	33.35	28.6	31.8	23.8	47.6	8.7	14.3	23.4	4.8	49.9	44.9	50.4	9.54	23.8	43.4	10.1
RF2120-LMC	39.7	33.3	37.3	28.6	57.2	14.0	16.0	27.8	5.6	60.7	54.4	59.9	–	–	–	–

Size & Series	Max. Allowable Load kN {kgf}	Approx. Mass kg/m S Roller	Approx. Mass kg/m R Roller	Additional Weight per Attachment kg A, SA	Additional Weight per Attachment kg K, SK	Additional Weight per Attachment kg EP	No. of Links per Unit
RF2040-LMC	2.65{270}	0.51	0.87	0.003	0.006	0.001	120
RF2050-LMC	4.31{440}	0.84	1.30	0.006	0.012	0.002	96
RF2060-LMC	6.28{640}	1.51	2.19	0.017	0.034	0.003	80
RF2080-LMC	10.7{1090}	2.41	3.52	0.032	0.064	0.007	60
RF2100-LMC	17.1{1740}	3.54	5.80	0.06	0.12	0.012	48
RF2120-LMC	23.9{2440}	5.08	8.13	0.100	0.200	–	40

Note: 1. LMCNP and LMCKF chains have the same dimensions as shown above.
2. Pin end diameter on EP attachments is slightly larger.
3. The link plates on LMCKF chain are blackened.
4. LMCKF chain uses 2-pitch offset links (2POL), which are made-to-order. Contact a Tsubaki representative for details.
5. The above dimensions are nominal dimensions and may differ from actual dimensions.

Long Life LAMBDA Double Pitch Chain (X-Λ [X-Lambda])

Base Chain

S Roller

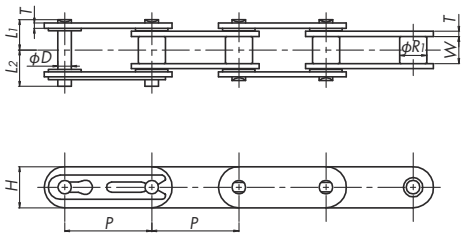

R Roller

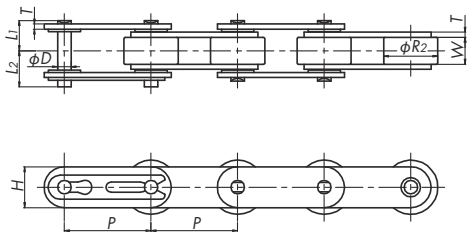

Attachments

A1 Attachment

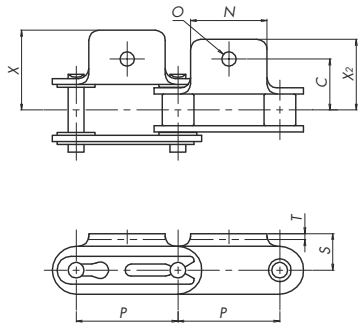

A2 Attachment

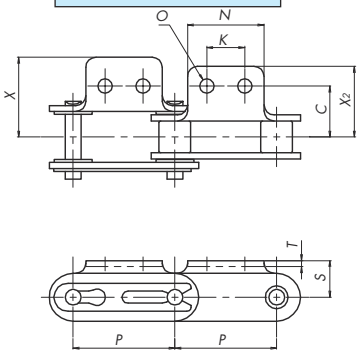

K1 Attachment

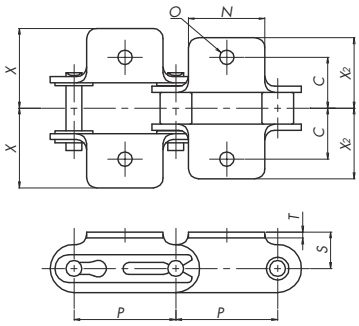

K2 Attachment

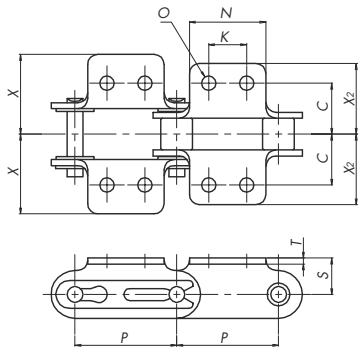

SA1 Attachment

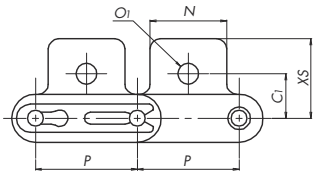

SA2 Attachment

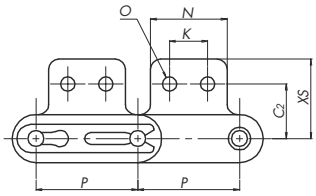

SK1 Attachment

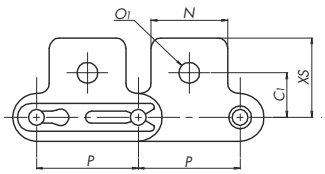

SK2 Attachment

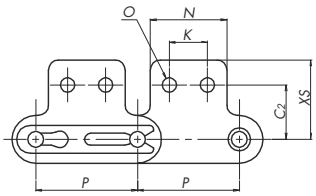

Note: 1. Attachments shown are S roller type. However, the dimensions for attachments are the same when R rollers are used. Also, the drawings show attachments added on every link.
2. RS sprockets can be used with S rollers if the sprocket has 30 or more teeth. A Double Pitch sprocket will be needed if the sprocket has fewer than 30 teeth.

Base Chain Dimensions

Size & Series	Roller Type	Pitch *P*	Width Between Inner Link Plates *W*	Roller Dia.		Pin			Plate		Max. Allowable Load kN {kgf}
				S Roller R_1	R Roller R_2	Dia. *D*	L_1	L_2	Thickness *T*	Width *H*	
RF2040-LMCX	S · R	25.40	7.95	7.92	15.88	3.97	8.90	10.6	1.5	12.0	2.65 { 270}
RF2050-LMCX		31.75	9.53	10.16	19.05	5.09	11.0	12.7	2.0	15.0	4.31 { 440}
RF2060-LMCX		38.10	12.70	11.91	22.23	5.96	15.25	17.15	3.2	17.2	6.28 { 640}
RF2080-LMCX		50.80	15.88	15.88	28.58	7.94	19.15	21.75	4.0	23.0	10.7 {1090}
RF2100-LMCX		63.50	19.05	19.05	39.69	9.54	22.6	25.3	4.8	28.6	17.1 {1740}

Attachment Dimensions

Size & Series	Attachment												Approx. Mass kg/m		Additional Weight per Attachment kg		No. of Links per Unit
	C	C_1	C_2	*K*	*N*	*O*	O_1	*S*	*T*	*X*	X_2	*XS*	S Roller	R Roller	A, SA	K, SK	
RF2040-LMCX	12.7	11.1	13.6	9.5	19.1	3.6	5.2	9.1	1.5	19.9	17.6	19.8	0.51	0.87	0.003	0.006	120
RF2050-LMCX	15.9	14.3	15.9	11.9	23.8	5.2	6.8	11.1	2.0	24.85	22.0	24.6	0.84	1.30	0.006	0.012	96
RF2060-LMCX	21.45	17.5	19.1	14.3	28.6	5.2	8.7	14.7	3.2	32.4	28.2	30.6	1.51	2.19	0.017	0.034	80
RF2080-LMCX	27.8	22.2	25.4	19.1	38.1	6.8	10.3	19.1	4.0	41.6	36.6	40.5	2.43	3.54	0.032	0.064	60
RF2100-LMCX	33.35	28.6	31.8	23.8	47.6	8.7	14.3	23.4	4.8	50.8	44.9	50.4	3.56	5.82	0.06	0.12	48

Note: 1. Due to the felt seals, chain pin length (L_1, L_2) is slightly longer than those on standard double pitch or Lambda double pitch chains. The attachments' *X* dimension is also larger than on attachments for standard double pitch chain or Lambda double pitch chain. Please check that this will not cause interference with machinery or other equipment.
2. Uses an oil-impregnated felt seal, causing more oil to stick to the surface of the chain when compared to Lambda chain.
3. See page 48 for instructions on handling connecting links. Note that the shape of the felt seal is round and differs from the felt seals on RS chain. Four felt seals are installed on each connecting link.
4. Offset links are not available. Chains should be designed with an even number of links.
5. The above dimensions are nominal dimensions and may differ from actual dimensions.

LAMBDA RS Attachment Chain

Base Chain

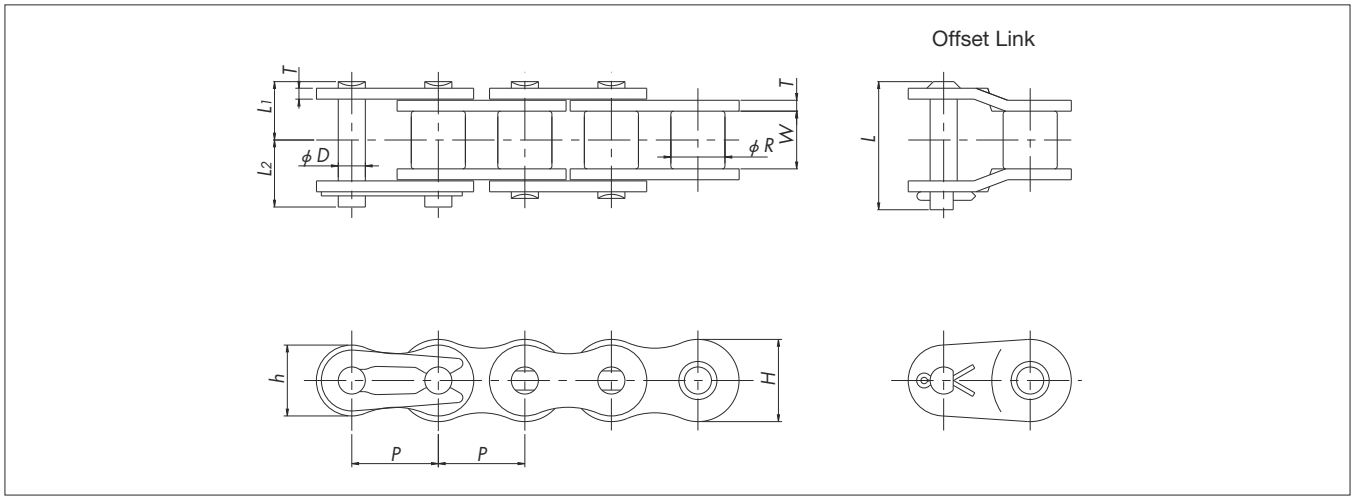

Attachments

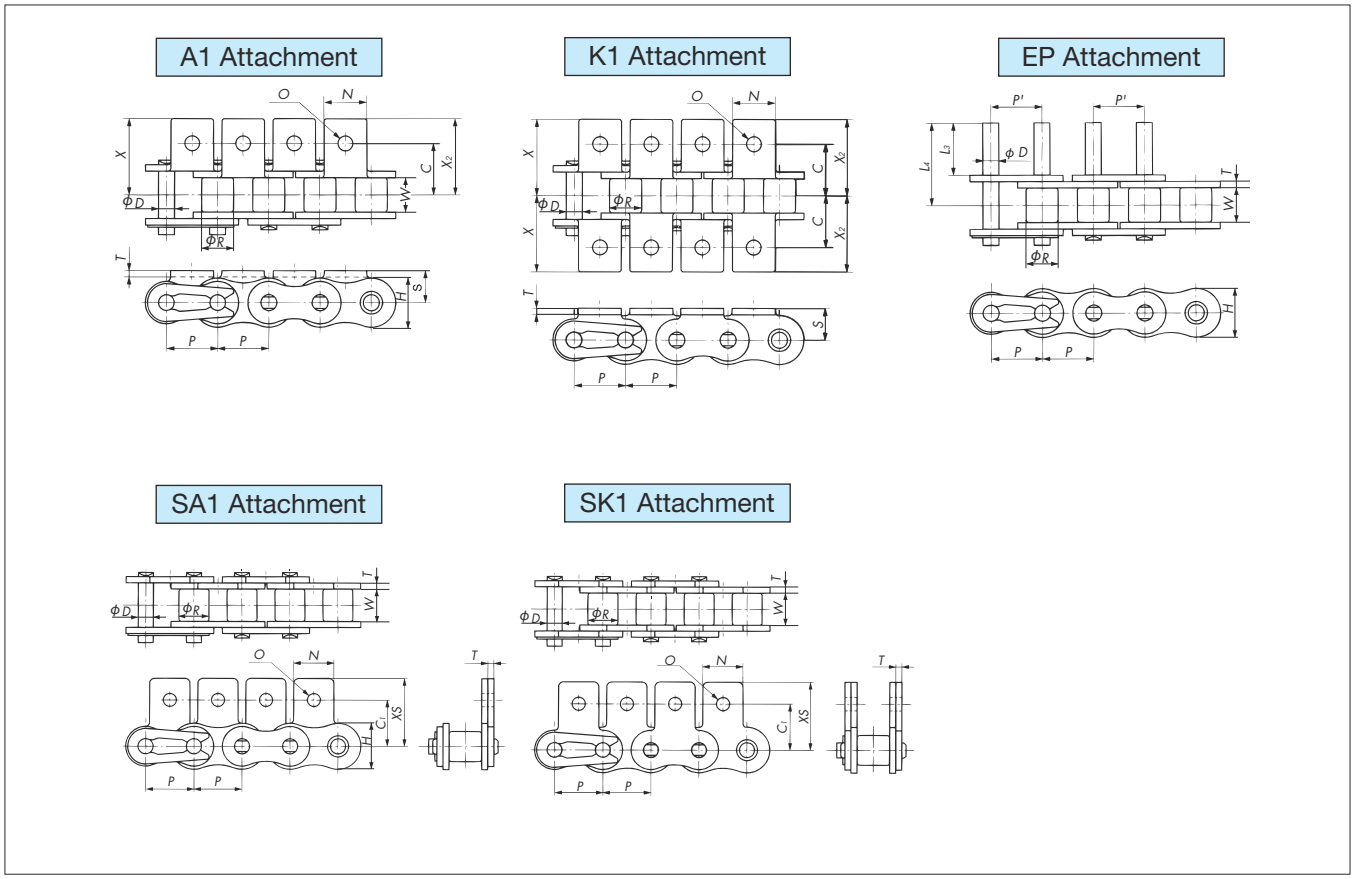

Note: 1. Drawings show attachments added on every link.
2. Actual dimension *P'* may differ from *P*. Contact a Tsubaki representative for details.

Base Chain Dimensions

Size & Series	Pitch *P*	*P'*	Width Between Inner Link Plates *W*	Roller Dia. *R*	Pin				Plate			Max. Allowable Load kN {kgf}	Approx. Mass kg/m	No. of Links per Unit
					Dia. *D*	L_1	L_2	*L*	Thickness *T*	Width *H*	Width *h*			
RS35-LMC	9.525	Contact a Tsubaki representative for details.	4.78	(5.08)	3.00	5.85	6.85	13.5	1.25	9.0	7.8	1.52{ 155}	0.33	320
RS40-LMC	12.70		7.95	7.92	3.97	8.25	9.95	18.2	1.5	12.0	10.4	2.65{ 270}	0.64	240
RS50-LMC	15.875		9.53	10.16	5.09	10.3	12.0	22.6	2.0	15.0	13.0	4.31{ 440}	1.04	192
RS60-LMC	19.05		12.70	11.91	5.96	12.85	14.75	28.2	2.4	18.1	15.6	6.28{ 640}	1.53	160
RS80-LMC	25.40		15.88	15.88	7.94	16.25	19.25	36.6	3.2	24.1	20.8	10.7 {1090}	2.66	120
RS100-LMC	31.75		19.05	19.05	9.54	19.75	22.85	43.7	4.0	30.1	26.0	17.1 {1740}	3.99	96
RS120-LMC	38.10		25.40	22.23	11.11	24.90	28.90	55.0	4.8	36.2	31.2	23.9 {2440}	5.93	80
RS140-LMC	44.45		25.40	25.4	12.71	26.90	31.70	59.5	5.6	42.2	36.4	32.4 {3300}	7.49	68

Attachment Dimensions

Size & Series	Attachment										Additional Weight per Attachment kg		
	C	C_1	*N*	*O*	*S*	*X*	X_2	*XS*	L_3	L_4	A, SA	K, SK	EP
RS35-LMC	9.5	9.5	7.9	3.4	6.35	14.3	14.3	14.55	9.5	14.6	0.0008	0.0016	0.0008
RS40-LMC	12.7	12.7	9.5	3.6	8.0	17.8	17.8	17.40	9.5	16.75	0.002	0.004	0.001
RS50-LMC	15.9	15.9	12.7	5.2	10.3	23.4	23.4	23.05	11.9	21.0	0.003	0.006	0.002
RS60-LMC	19.05	18.3	15.9	5.2	11.9	28.2	28.2	26.85	14.3	25.75	0.007	0.014	0.003
RS80-LMC	25.4	24.6	19.1	6.8	15.9	36.6	36.6	35.45	19.1	33.85	0.013	0.026	0.007
RS100-LMC	31.75	31.8	25.4	8.7	19.8	44.9	44.9	44.0	23.8	41.75	0.026	0.052	0.012
RS120-LMC	38.1	36.5	28.6	10.3	23.0	55.8	50.8	52.9	28.6	51.4	0.044	0.088	0.020
RS140-LMC	44.5	44.5	34.9	11.9	28.6	63.1	57.2	63.5	33.3	57.9	0.071	0.142	0.030

Note: 1. LMCNP and LMCKF chains have the same dimensions as shown above.
2. Pin diameters for RS35-LMC and RS35 are different. The two chains cannot be connected to each other.
3. Roller diameter *R* (in parentheses) for RS35-LMC is the bush diameter.
4. Dimension *D* of EP attachment for RS35-LMC is 3.0 mm in diameter and is slightly smaller than that for standard RS35 chain.
5. Pin end diameter on EP attachments is slightly larger.
6. The link plates on LMCKF chain are blackened. LMCKF chain uses 2-pitch offset links (2POL), which are made-to-order. Contact a Tsubaki representative for details.
7. The above dimensions are nominal dimensions and may differ from actual dimensions.
8. Connecting links of RS35-LMCKF use cotter pins.

Long Life LAMBDA RS Attachment Chain (X-Λ [X-Lambda])

Base Chain

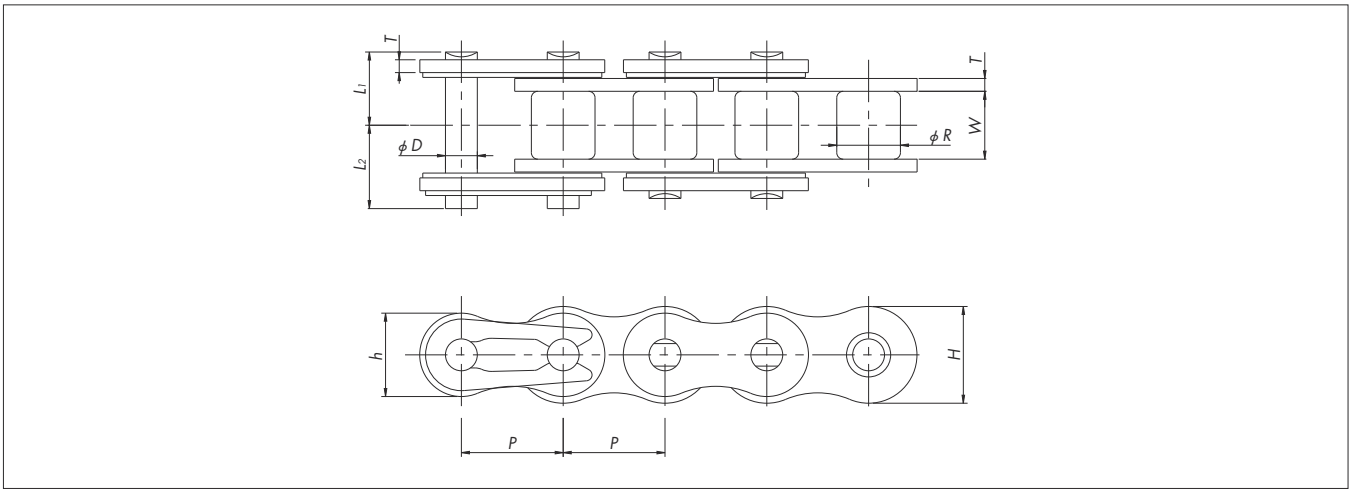

Attachments

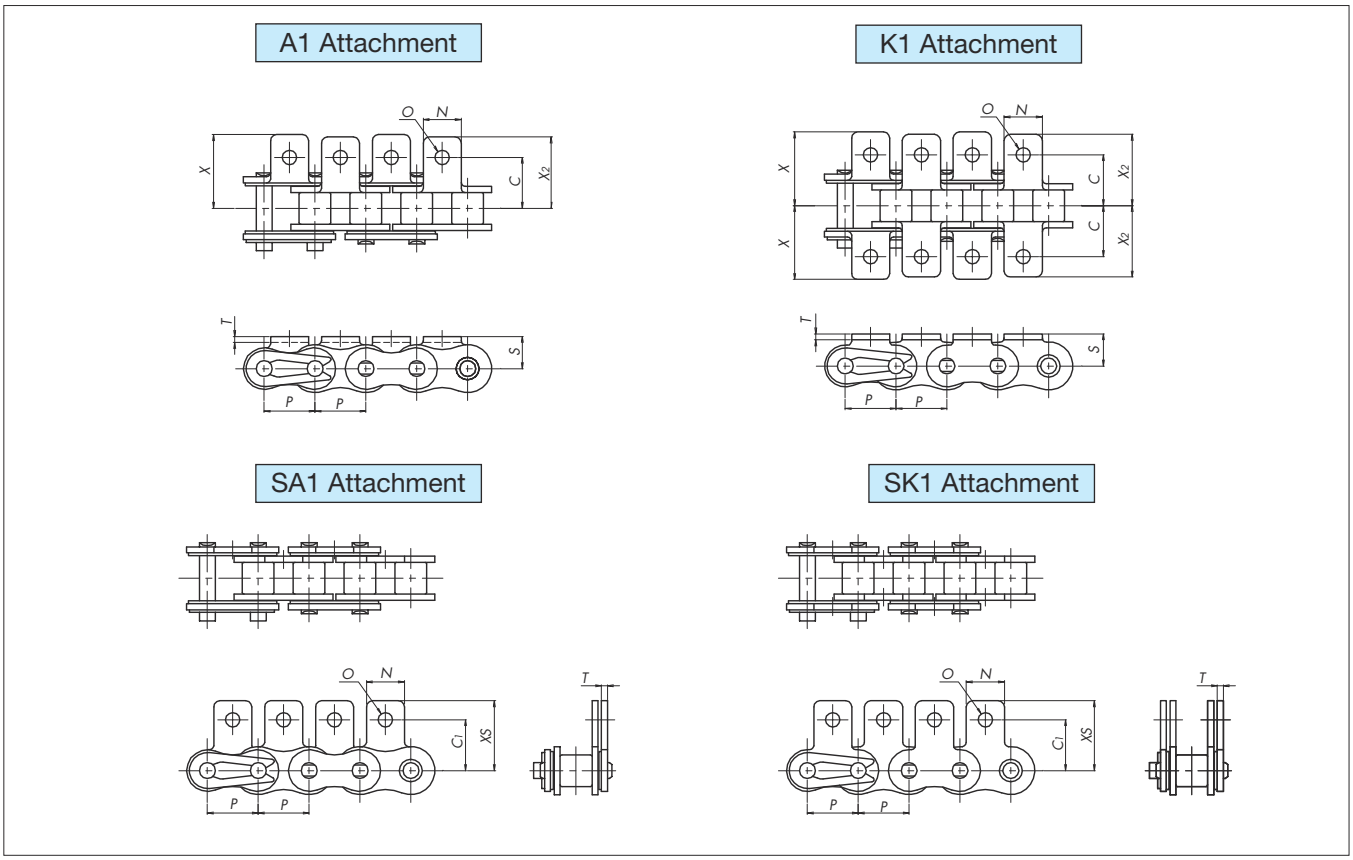

Note: Drawings show attachments added on every link.

■ Base Chain Dimensions

Size & Series	Pitch *P*	Width Between Inner Link Plates *W*	Roller Dia. *R*	Pin			Plate			Max. Allowable Load kN {kgf}	Approx. Mass kg/m	No. of Links per Unit
				Dia. *D*	L_1	L_2	Thickness *T*	Width *H*	Width *h*			
RS40-LMCX	12.70	7.95	7.92	3.97	8.90	10.6	1.5	12.0	10.4	2.65{ 270}	0.64	240
RS50-LMCX	15.875	9.53	10.16	5.09	11.0	12.7	2.0	15.0	13.0	4.31{ 440}	1.04	192
RS60-LMCX	19.05	12.70	11.91	5.96	13.7	15.6	2.4	18.1	15.6	6.28{ 640}	1.53	160
RS80-LMCX	25.40	15.88	15.88	7.94	17.1	20.1	3.2	24.1	20.8	10.7 {1090}	2.69	120
RS100-LMCX	31.75	19.05	19.05	9.54	20.6	23.6	4.0	30.1	26.0	17.1 {1740}	4.02	96

■ Attachment Dimensions

Size & Series	Attachment								Additional Weight per Attachment kg	
	C	C_1	*N*	*O*	*S*	*X*	X_2	*XS*	A, SA	K, SK
RS40-LMCX	12.7	12.7	9.5	3.6	8.0	18.40	17.8	17.40	0.002	0.004
RS50-LMCX	15.9	15.9	12.7	5.2	10.3	24.10	23.4	23.05	0.003	0.006
RS60-LMCX	19.05	18.3	15.9	5.2	11.9	29.05	28.2	26.85	0.007	0.014
RS80-LMCX	25.4	24.6	19.1	6.8	15.9	37.5	36.6	35.45	0.013	0.026
RS100-LMCX	31.75	31.8	25.4	8.7	19.8	45.6	44.9	44.0	0.026	0.052

Note: 1. Due to the felt seals, chain pin length (L_1, L_2) is slightly longer than those on RS attachment or Lambda RS attachment chains. The attachments' *X* dimension is also larger than on attachments for RS attachment chain or Lambda RS attachment chain. Please check that this will not cause interference with machinery or other equipment.
2. Uses an oil-impregnated felt seal, causing more oil to stick to the surface of the chain when compared to Lambda chain.
3. Offset links are not available. Chains should be designed with an even number of links.
4. The above dimensions are nominal dimensions and may differ from actual dimensions.

◆ How to Assemble a Connecting Link

When assembling chain, use connecting links designed for X-Lambda chain (with felt seals). As shown in the diagram at the right, insert felt seals between the outer plates and connecting plates, and attach the link. The felt seals are impregnated with oil. Be careful to ensure that oil is not squeezed out.

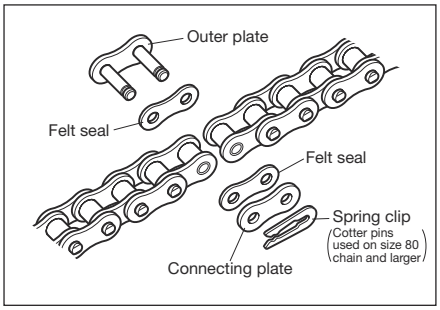

BS LAMBDA Attachment Chain

Base Chain

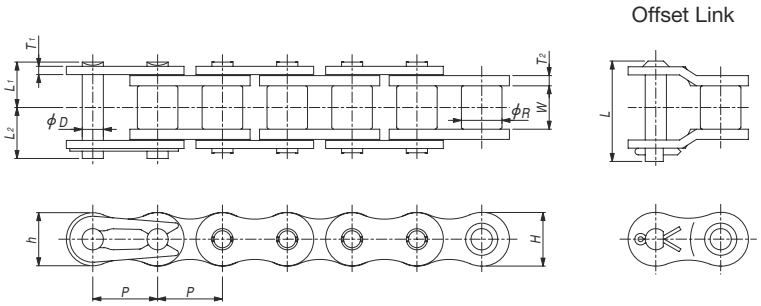

Attachments

A1 Attachment

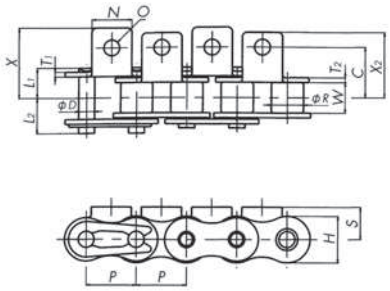

K1 Attachment

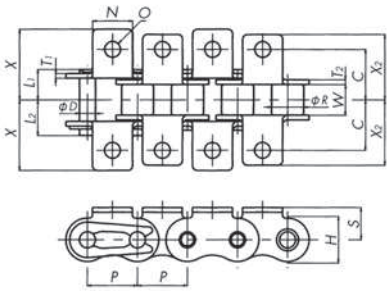

EP Attachment

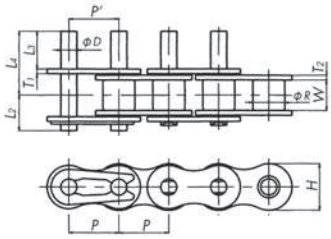

SA1 Attachment

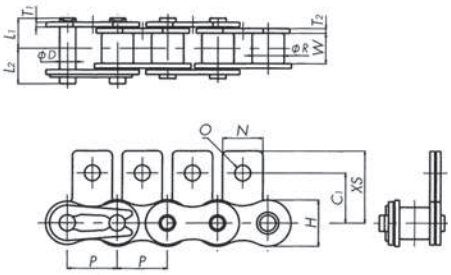

SK1 Attachment

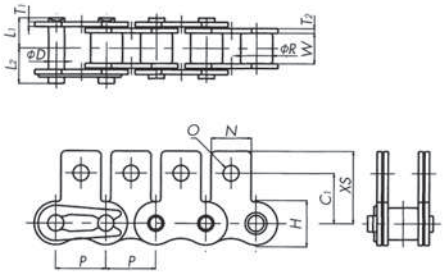

WA1, WA2 Attachment

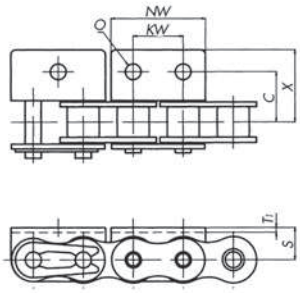

WK1, WK2 Attachment

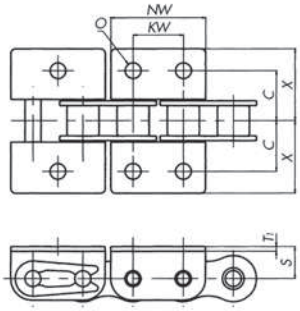

WSA1, WSA2 Attachment

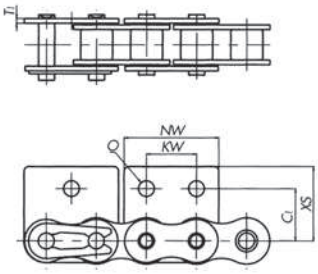

WSK1, WSK2Attachment

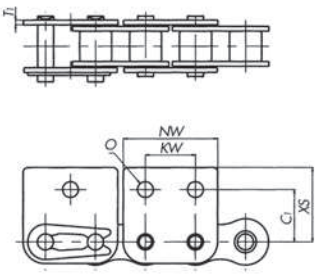

Note: Actual dimension *P'* may differ from *P*. Contact a Tsubaki representative for details.

Base Chain Dimensions

Size & Series	Pitch P	P'	Roller Dia. R	Width Between Inner Link Plates W	Plate Thickness T_2	Plate Thickness T_1	Plate Width H	Plate Width h	Pin Dia. D	Pin Length L_1+L_2	Pin Length L_1	Pin Length L_2	Offset Pin Length L	Min. Tensile Strength kN {kgf}	Approx. Mass kg/m	No. of Links per Unit
RS08B-LM	12.70	Contact a Tsubaki representative for details.	8.51	7.75	1.6	1.6	12.0	10.4	4.45	18.4	8.4	10.0	18.6	13.7{ 1400}	0.70	240
RS10B-LM	15.875		10.16	9.65	1.5	1.5	14.7	13.7	5.08	20.8	9.55	11.25	20.8	16.1{ 1640}	0.95	192
RS12B-LM	19.05		12.07	11.68	1.8	1.8	16.1	16.1	5.72	24.1	11.1	13.0	24.4	19.5{ 1990}	1.25	160
RS16B-LM	25.40		15.88	17.02	4.0	3.2	21.0	21.0	8.28	37.7	17.75	19.95	39.3	60.0{ 6120}	2.70	120
RS20B-LM	31.75		19.05	19.56	4.4	3.4	26.0	26.0	10.19	43.0	19.9	23.1	46.6	95.0{ 9680}	3.85	96
RS24B-LM	38.10		25.40	25.40	6.0	5.6	33.4	31.2	14.63	58.5	26.65	31.85	61.7	160 {16300}	7.45	80

Attachment Dimensions

Size & Series	A1, SA1, K1, SK1 Attachments								Additional Weight per Attachment kg	
	C	C_1	N	O	S	X	X_2	XS	A, SA	K, SK
RS08B-LM	11.9	12.7	11.4	4.2	8.9	19.05	17.15	19.3	0.002	0.004
RS10B-LM	15.9	15.9	12.7	5.0	10.2	22.25	20.6	22.95	0.003	0.006
RS12B-LM	19.05	22.2	16.5	7.1	13.5	29.85	27.85	32.05	0.006	0.012
RS16B-LM	23.8	23.9	24.3	6.7	15.2	37.35	34.4	34.1	0.014	0.028
RS20B-LM	31.75	31.8	25.4	8.7	19.8	44.85	41.6	44.0	0.024	0.048
RS24B-LM	Contact a Tsubaki representative for details.									

Size & Series	WA2, WSA2, WK2, WSK2 Attachments WA1, WSA1, WK1, WSK1 Attachments								EP Attachment			Additional Weight per Attachment kg		
	C	C_1	NW	O	S	X	XS	KW	D	L_3	L_4	WA, WSA	WK, WSK	EP
RS08B-LM	12.7	13.1	24.6	4.9	8.9	20.3	20.7	12.7	4.45	9.5	17.0	0.005	0.010	0.001
RS10B-LM	15.9	16.6	30.0	5.0	10.2	22.85	23.55	15.9	5.08	11.9	20.25	0.006	0.012	0.002
RS12B-LM	17.45	17.6	34.8	5.5	11.4	25.65	25.75	19.1	5.72	14.3	24.1	0.009	0.018	0.003
RS16B-LM	28.6	26.0	46.0	8.1	15.9	39.25	36.7	25.4	8.28	19.1	35.25	0.030	0.060	0.008
RS20B-LM	Contact a Tsubaki representative for details.								10.19	23.8	42.0	–	–	–
RS24B-LM	Contact a Tsubaki representative for details.											–	–	–

Note: 1. Single-strand chains in sizes RS08B through RS16B use easy disassembly pins (with center sink riveting). All other sizes, including 2-strand chains, use double-sided riveting.
2. Minimum tensile strength and maximum allowable load are not the same thing. Refer to page 8.
3. Contact a Tsubaki representative regarding chain selection.
4. When replacing a chain that has made-in-Europe standard attachments with Tsubaki attachment chain, be sure to check attachment dimensions in advance, since Tsubaki standard dimensions may differ from European dimensions.
5. Pin end diameter on EP attachments is slightly larger.
6. Tsubaki can manufacture special attachments and special extended pins, as well as RF06B attachment chain. Please inquire for details.
7. The above dimensions are nominal dimensions and may differ from actual dimensions.

LAMBDA RF Roller Chain

Chain No. p.17-18 p.125-127 p.15 p.141-

Base Chain

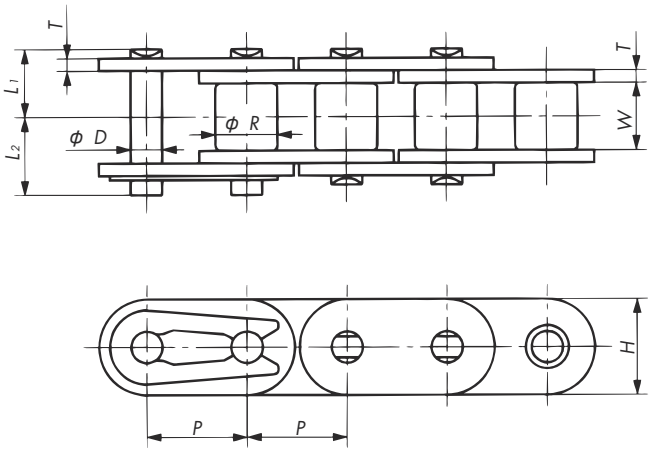

Base Chain Dimensions

Size & Series	Pitch *P*	Roller Dia. *R*	Width Between Inner Link Plates *W*	Plate		Pin			Max. Allowable Load kN {kgf}	Approx. Mass kg/m	No. of Links per Unit
				Thickness *T*	Width *H*	Dia. *D*	L_1	L_2			
RF35-LMC	9.525	(5.08)	4.78	1.25	9.0	3.00	5.85	6.85	1.52{ 155}	0.41	320
RF40-LMC	12.70	7.92	7.95	1.5	12.0	3.97	8.25	9.95	2.65{ 270}	0.74	240
RF50-LMC	15.875	10.16	9.53	2.0	15.0	5.09	10.3	12.0	4.31{ 440}	1.22	192
RF60-LMC	19.05	11.91	12.70	2.4	18.1	5.96	12.85	14.75	6.28{ 640}	1.78	160
RF80-LMC	25.40	15.88	15.88	3.2	24.1	7.94	16.25	19.25	10.7 {1090}	3.09	120
RF100-LMC	31.75	19.05	19.05	4.0	28.6	9.54	19.75	22.85	17.1 {1740}	4.43	96

Note: 1. Offset links are not available. Chains should be designed with an even number of links.
2. Pin diameters for RF35-LMC and RF35 are different. The two chains cannot be connected to each other.
3. Roller diameter *R* (in parentheses) for RF35-LMC is the bush diameter.
4. The above dimensions are nominal dimensions and may differ from actual dimensions.

Hollow Pin Chain

Chain No. p.17-18 | p.121-,125- | p.15 | p.141-

In Hollow Pin Chain, the pin is made with a hole, enabling various attachments to be installed simply and easily. This type of chain is used for general-purpose conveyance.

Features:
1. Regardless of whether the chain is straight or wrapped around a sprocket, the center distance between attachments is always the same.
2. The load from the attachments is distributed equally to both sides of the link plates. This provides advantages in terms of strength, and the chain has less tendency to wind while running.
3. It is easy to replace attachments, do maintenance, or adjust attachment spacing even while the chain is installed on equipment.

Hollow Pin Double Pitch Chain

Base Chain

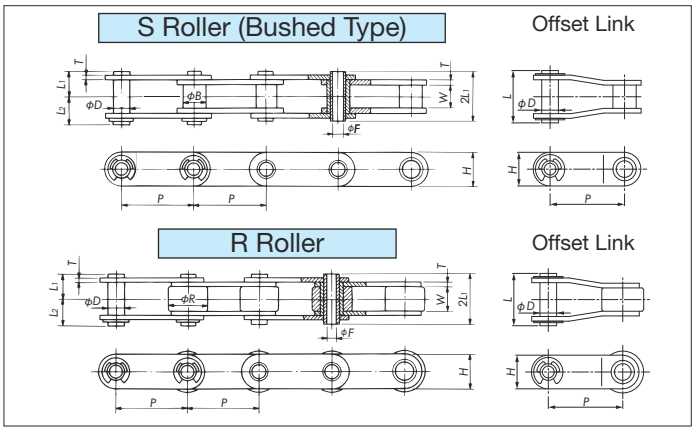

Maximum Allowable Load

kN {kgf}

Size	Series			
	HP	HPNP	LMCHP	HPSS
RF2040	1.77{180}		1.47{150}	0.44{ 45}
RF2050	3.14{320}		2.55{260}	0.69{ 70}
RF2060	4.22{430}		3.43{350}	1.03{105}
RF2080	7.65{780}		6.18{630}	1.77{180}

Base Chain Dimensions

Size	Roller Type	Pitch P	Bush Dia. B	Roller Dia. R	Width Between Inner Link Plates W	Plate		Pin				Offset Pin Length L	Approx. Mass kg/m		No. of Links per Unit
						Thickness T	Width H	Outer Dia. E	Inner Dia. F (min.)	L_1	L_2		Bushed Type	R Roller	
RF2040	S · R	25.40	7.92	15.88	7.95	1.5	12.0	5.68	4.00	8.00	9.50	19.1	0.46	0.82	120
RF2050		31.75	10.16	19.05	9.53	2.0	15.0	7.22	5.12	10.05	11.65	23.4	0.75	1.21	96
RF2060		38.10	11.91	22.23	12.70	2.4	17.2	8.38	5.99	12.55	14.25	28.7	1.38	2.06	80
RF2080		50.80	15.88	28.58	15.88	3.2	23.0	11.375	8.02	16.25	17.80	35.7	1.80	2.81	60

Note: 1. S roller type (bushed type) chains have no rollers.
2. HPSS chains are not pre-lubricated before shipping. Always lubricate the chain before use, except when using underwater or when the chain will contact water. Using a chain without lubrication may result in premature articulation problems. Maximum allowable loads are based on lubricated (including water lubricated) conditions.
3. The above dimensions are nominal dimensions and may differ from actual dimensions.

Hollow Pin RS Chain

Base Chain

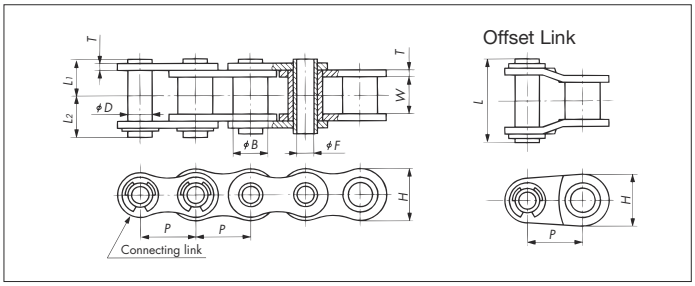

Maximum Allowable Load

kN {kgf}

Size	Series			
	HP	HPNP	LMCHP	HPSS
RS40	1.77{180}		1.47{150}	0.44{ 45}
RS50	3.14{320}		2.55{260}	0.69{ 70}
RS60	4.22{430}		3.43{350}	1.03{105}
RS80	7.65{780}		6.18{630}	1.77{180}

Base Chain Dimensions

Size	Pitch P	Bush Dia. B	Width Between Inner Link Plates W	Plate		Pin				Offset Pin Length L	Approx. Mass kg/m	No. of Links per Unit
				Thickness T	Width H	Outer Dia. E	Inner Dia. F (min.)	L_1	L_2			
RS40	12.70	7.92	7.95	1.5	12.0	5.68	4.00	8.00	9.50	19.1	0.53	240
RS50	15.875	10.16	9.53	2.0	15.0	7.22	5.12	10.05	11.65	23.4	0.86	192
RS60	19.05	11.91	12.70	2.4	18.1	8.38	5.99	12.55	14.25	28.7	1.27	160
RS80	25.40	15.88	15.88	3.2	24.1	11.375	8.02	16.25	17.80	35.7	2.15	120

Note: 1. HPSS chains are not pre-lubricated before shipping. Always lubricate the chain before use, except when using underwater or when the chain will contact water. Using a chain without lubrication may result in premature articulation problems. Maximum allowable loads are based on lubricated (including water lubricated) conditions.
2. The above dimensions are nominal dimensions and may differ from actual dimensions.

Curved Double Pitch Chain

Chain No. p.17-18 p.121-122 p.15 p.141-

This chain has additional clearance between the pins and bushes to permit extra flexibility.
Guide rails to control the chain enable it to be used for curved conveyance. The chain can be used for power transmission purposes, as well as for conveyance when attachments are installed.

■ Base Chain and Attachments

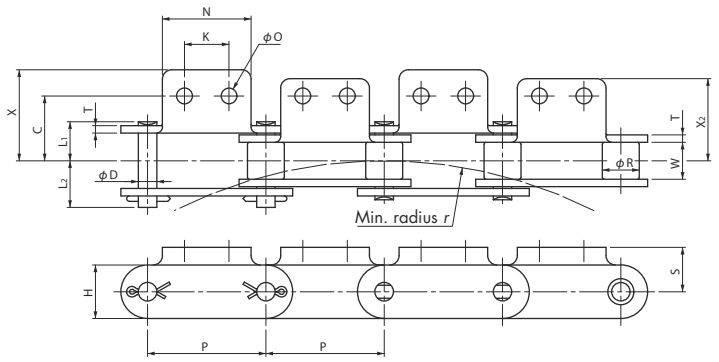

■ Base Chain Dimensions

Size & Series	Pitch *P*	Width Between Inner Link Plates *W*	Roller Dia. *R*		Plate		Pin			Min. Radius *r*	Max. Allowable Load kN {kgf}	Approx. Mass kg/m		No. of Links per Unit
			S Roller	R Roller	Thickness *T*	Width *H*	Dia. *D*	L_1	L_2			S Roller	R Roller	
RF2040-CU	25.40	7.95	7.92	15.88	1.5	12.0	3.97	8.45	9.75	700	1.86{190}	0.51	0.87	120
RF2050-CU	31.75	9.53	10.16	19.05	2.0	15.0	5.09	10.6	12.4	800	2.84{290}	0.84	1.30	96
RF2060-CU	38.10	12.70	11.91	22.23	2.4	17.2	5.96	13.25	15.05	1000	4.02{410}	1.22	1.90	80
RF2080-CU	50.80	15.88	15.88	28.58	3.2	23.0	7.94	16.75	20.05	1200	6.96{710}	2.02	3.13	60

■ Attachment Dimensions

Size & Series	A2, SA2, K2, SK2 Attachments							Additional Weight per Attachment kg	
	C	*K*	*N*	*O*	*S*	*X*	X_2	A	K
RF2040-CU	12.7	9.5	19.1	3.6	9.1	19.5	17.6	0.03	0.06
RF2050-CU	15.9	11.9	23.8	5.2	11.1	24.4	22.0	0.06	0.12
RF2060-CU	21.45	14.3	28.6	5.2	14.7	29.8	26.95	0.013	0.026
RF2080-CU	27.8	19.1	38.1	6.8	19.1	39.1	35.25	0.026	0.052

Note: 1. Drawing shows S roller chain. Dimensions are the same for R roller chain, excluding roller dimensions.
2. The above dimensions are nominal dimensions and may differ from actual dimensions.

Curved RS Attachment Chain

Chain No. p.17-18 p.125-127 p.15 p.141-

Base Chain and Attachments

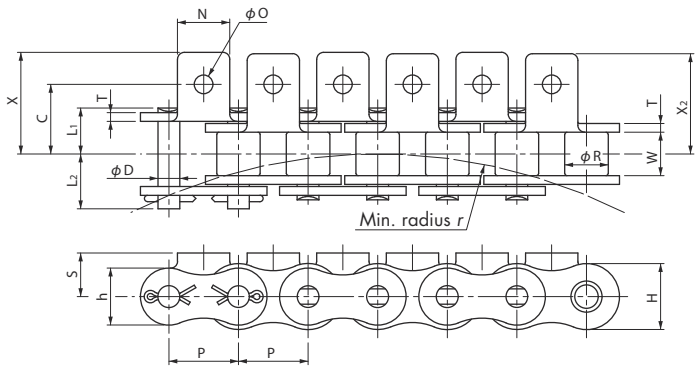

Base Chain Dimensions

Size & Series	Pitch *P*	Width Between Inner Link Plates *W*	Roller Dia. *R*	Plate			Pin			Min. Radius *r*	Max. Allowable Load kN {kgf}	Approx. Mass kg/m	No. of Links per Unit
				Thickness *T*	Width *H*	Width *h*	Dia. *D*	L_1	L_2				
RS40-CU	12.70	7.95	7.92	1.5	12.0	10.4	3.97	8.45	9.75	350	1.86{190}	0.61	240
RS50-CU	15.875	9.53	10.16	2.0	15.0	13.0	5.09	10.6	12.4	400	2.84{290}	1.01	192
RS60-CU	19.05	12.70	11.91	2.4	18.1	15.6	5.96	13.25	15.05	500	4.02{410}	1.40	160
RS80-CU	25.40	15.88	15.88	3.2	24.1	20.8	7.94	16.75	20.05	600	6.96{710}	2.47	120

Attachment Dimensions

Size & Series	A1, K1 Attachments						Additional Weight per Attachment kg	
	C	*N*	*O*	*S*	*X*	X_2	A	K
RS40-CU	12.7	9.5	3.6	8.0	18.0	17.8	0.002	0.004
RS50-CU	15.9	12.7	5.2	10.3	23.7	23.4	0.003	0.006
RS60-CU	19.05	15.9	5.2	11.9	28.5	28.2	0.007	0.014
RS80-CU	25.4	19.1	6.8	15.9	37.1	36.6	0.013	0.026

Note: The above dimensions are nominal dimensions and may differ from actual dimensions.

Specialty Attachment Chain (Plus α)

	Product Name	Description	Page
Speedy Delivery	Special Hole Diameter Attachment (Attachment Type: A, K)	Attachments with the most typical special hole diameters (JIS-2 class equivalent bolt holes) from amongst our numerous attachments.	56
	Press Nut Attachment (Attachment Type: A-NM, K-NM)	Nuts are added on the attachment to enable slats to be installed simply and easily.	57
	Special Extended Pin (Attachment Type: EP)	Special extended pins can be manufactured with a short lead time by using common components.	59
Stock Designs	Upper Surface Ground Attachment (Attachment Type: PG)	The rollers are ground, and the upper surfaces of the attachments are ground as well.	61
	Large Size RS Attachment	Attachment for chain sizes RS180 and larger.	62
	Double Pitch Deep Link (Attachment Type: DL)	Height of the link plates (dimension H1) is higher than the top of the roller on double pitch base chain. Allows materials to be placed directly on the chain even with R rollers.	63
	Inwardly Bent Attachment (Attachment Type: UM)	The top edges of the attachment are chamfered to protect conveyed materials from scratches. Allows conveyed materials to be placed directly on the chain, or be conveyed by sandwiching between chains.	63
	Guide Roller (Attachment Type: GR)	Guide rollers prevent meandering and can be used as running rollers. (Not for curved chain.)	64
	Threaded Extended Pin (Attachment Type: EN)	Extended pins (hardened steel) are threaded to enable tools, jigs, etc. to be attached.	65
	Extended Pin with Spring Clip (Attachment Type: EC)	The spring clip allows the attachment of tools, etc.	66
	Stay Pin (Attachment Type: ST)	Pins are made longer to form parallel strands. Conveyed materials can be placed directly on the pins. Installing wire mesh is one example of use.	67
	Triangle Attachment (Attachment Type: RE)	For conveying various types of bar-like objects.	69
	Sticker Attachment (Attachment Type: FS)	The attachment is topped with a sharp barb-like spike to grip flat objects such as film.	69
	Magnetic Attachment (Attachment Type: MG)	A magnet mounted on the attachment holds cases carrying conveyed goods. Can be used for inclined conveyance.	70
	Rubber Attachment (Attachment Type: RSG)	A layer of rubber is bonded to the attachment. The elasticity of the rubber allows objects to be conveyed between chains.	70
	Crescent Top Plate (Attachment Type: CL)	For circulating-loop conveyors operating on a horizontal plane.	71
	Slat (Attachment Type: SLT [Riveted])	Slats are installed on tough double pitch chain. Ideal for conveying relatively heavy material.	71
	Slat (Attachment Type: SLW [Welded])	Slats are welded on double pitch chain. Ideal for conveying relatively heavy material.	72
	RS Slat (Attachment Type: SLT [Riveted])	Small-pitch RS chain with a small distance between slats. Ideal for conveying small items. The small pitch also allows smooth operation.	72
	FIlm Gripper Attachment (Attachment Type: KUM)	Gripper attachment for conveying film, etc., held by a friction clip.	73
Integrated Attachment Chain			74–

Special Hole Diameter Attachment (Double Pitch / RS)

Attachments with the most typical special hole diameters (JIS-2 class equivalent bolt holes) from amongst our numerous attachments.

Special Hole Diameter Attachment (Double Pitch)

Attachment Type: A, K

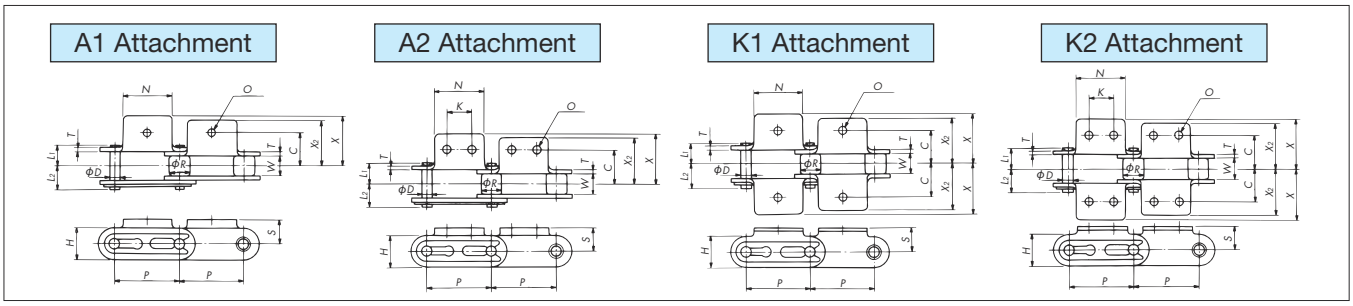

Attachment Dimensions

Size	Pitch P	Width Between Inner Link Plates W	Roller Dia. R		Pin			Plate		Attachment						
			S Roller	R Roller	Dia. D	L_1	L_2	Width H	Thickness T	C	K	N	S	X	X_2	O
RF2040	25.40	7.95	7.92	15.88	3.97	8.25	9.95	12.0	1.5	12.7	9.5	19.1	9.1	19.3	17.6	4.5・5.5
RF2050	31.75	9.53	10.16	19.05	5.09	10.30	12.0	15.0	2.0	15.9	11.9	23.8	11.1	24.2	22.0	4.5・5.5
RF2060	38.10	12.70	11.91	22.23	5.96	14.55	16.55	17.2	3.2	21.45	14.3	28.6	14.7	31.5	28.2	5.5・6.5
RF2080	50.80	15.88	15.88	28.58	7.94	18.30	20.90	23.0	4.0	27.8	19.1	38.1	19.1	40.7	36.6	9.0
RF2100	63.50	19.05	19.05	39.69	9.54	21.80	24.50	28.6	4.8	33.35	23.8	47.6	23.4	49.9	44.9	11.0

Note: 1. Attachments shown are S roller type. However, the dimensions for attachments are the same when R rollers are used. Also, the drawings show attachments added on every link.
2. The above dimensions are nominal dimensions and may differ from actual dimensions.

Model Numbering Example

Special Hole Diameter (Double Pitch)

RF2040R-LMC-1LK1-5.5+120L-JR

- Size
- Roller type: S: S roller, R: R roller
- Series: [Blank]: General use, LMC: Lambda
- Attachment spacing and type
- Special hole diameter (Dimension O in mm)
- No. of links
- End link: NP: Nickel plated, NEP: Special coating

Connecting Link (JL)

RF2040-LMC-K1-5.5JL

- Same as at left
- Attachment type (Enter only when attachments are to be installed)
- Connecting link (JL)

Special Hole Diameter Attachment (RS)

Attachment Type: A, K

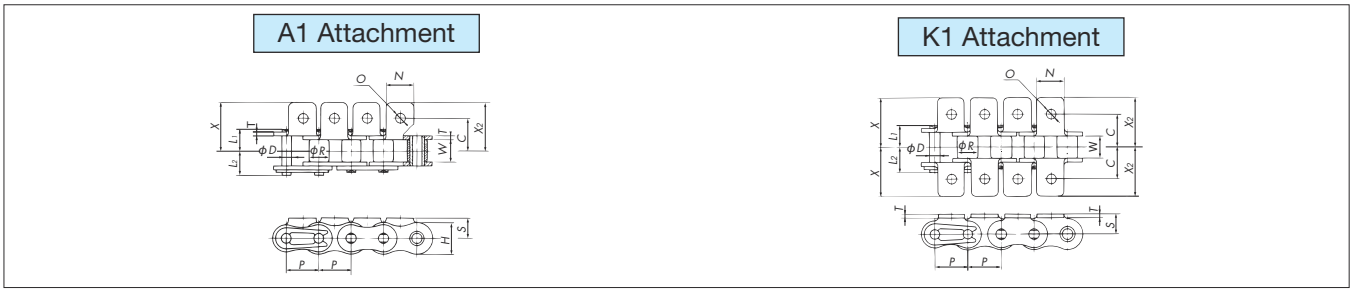

Attachment Dimensions

Size	Pitch P	Width Between Inner Link Plates W	Roller (Bush) Dia. R	Pin			Plate		Attachment					
				Dia. D	L_1	L_2	Width H	Thickness T	C	N	S	X	X_2	O
RS35	9.525	4.78	(5.08)	3.59 〈3.00〉	5.85	6.85	9.0	1.25	9.5	7.9	6.35	14.3	14.3	2.6
RS40	12.70	7.95	7.92	3.97	8.25	9.95	12.0	1.5	12.7	9.5	8.0	17.8	17.8	4.5・5.5
RS50	15.875	9.53	10.16	5.09	10.3	12.0	15.0	2.0	15.9	12.7	10.3	23.4	23.4	4.5・5.5
RS60	19.05	12.70	11.91	5.96	12.85	14.75	18.1	2.4	19.05	15.9	11.9	28.2	28.2	5.5・6.5
RS80	25.40	15.88	15.88	7.94	16.25	19.25	24.1	3.2	25.4	19.1	15.9	36.6	36.6	9.0
RS100	31.75	19.05	19.05	9.54	19.75	22.85	30.1	4.0	31.75	25.4	19.8	44.9	44.9	11.0

Note: 1. Drawings show attachments added on every link.
2. The figure inside < > is for Lambda chain.
3. The above dimensions are nominal dimensions and may differ from actual dimensions.

Model Numbering Example

Special Hole Diameter (RS)

RS40-LMC-1LA1-4.5+240L-JR

- Size
- Series: [Blank]: General use, LMC: Lambda
- Attachment spacing and type
- Special hole diameter (Dimension O in mm)
- No. of links
- End link: NP: Nickel plated, NEP: Special coating

Connecting Link (JL)

RS40-LMC-A1-4.5JL

- Same as at left
- Attachment type (Enter only when attachments are to be installed)
- Connecting link (JL)

Press Nut Attachment (Double Pitch / RS)

Nuts are added on the attachment to enable slats to be installed simply and easily.
Both the attachment and nut are heat-treated for ample strength.

Press Nut Attachment (Double Pitch)

Attachment Type: A, K

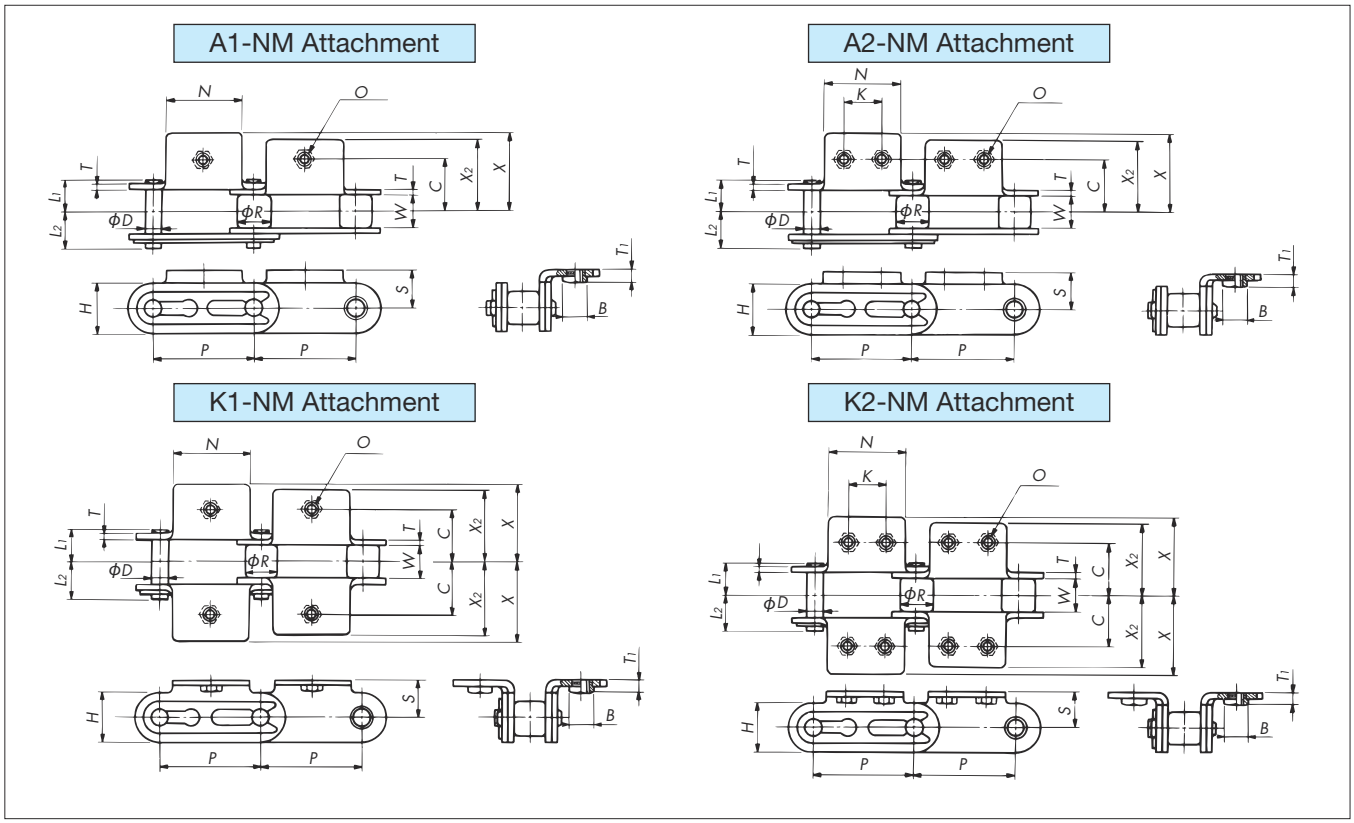

■ Attachment Dimensions

Size & Press Nut	Pitch P	Width Between Inner Link Plates W	Roller Dia. R		Pin			Plate		Attachment								
			S Roller	R Roller	Dia. D	L_1	L_2	Width H	Thickness T	C	K	N	B	S	X	X_2	T_1	O
RF2040-NM3	25.40	7.95	7.92	15.88	3.97	8.25	9.95	12.0	1.5	12.7	9.5	19.1	5.5	9.1	19.3	17.6	3.6	M3
RF2040-NM4	25.40	7.95	7.92	15.88	3.97	8.25	9.95	12.0	1.5	12.7	9.5	19.1	7.0	9.1	19.3	17.6	3.8	M4
RF2050-NM4	31.75	9.53	10.16	19.05	5.09	10.3	12.0	15.0	2.0	15.9	11.9	23.8	7.0	11.1	24.2	22.0	4.3	M4
RF2050-NM5	31.75	9.53	10.16	19.05	5.09	10.3	12.0	15.0	2.0	15.9	11.9	23.8	8.0	11.1	24.2	22.0	5.1	M5
RF2060-NM5	38.10	12.70	11.91	22.23	5.96	14.55	16.55	17.2	3.2	21.45	14.3	28.6	8.0	14.7	31.5	28.2	6.3	M5
RF2060-NM6	38.10	12.70	11.91	22.23	5.96	14.55	16.55	17.2	3.2	21.45	14.3	28.6	10.0	14.7	31.5	28.2	7.3	M6

Note: 1. Attachments shown are S roller type. However, the dimensions for attachments are the same when R rollers are used. Also, the drawings show attachments added on every link.
2. Dimension *B* is the width when nuts are installed on upper and lower surfaces.
3. The above dimensions are nominal dimensions and may differ from actual dimensions.

Model Numbering Example

Press Nut (Double Pitch)

RF2040R-LMC-1LK1-NM4+120L-JR

- Size
- Roller type: S: S roller; R: R roller
- Series: [Blank]: General use; LMC: Lambda
- Attachment spacing and type
- Press nut: NP: Nickel plated; NEP: Special coating
- No. of links
- End link

Connecting Link (JL)

RF2040-LMC-K1-NM4JL

- Same as at left
- Attachment type (Enter only when attachments are to be installed)
- Connecting link (JL)

Press Nut Attachment (RS)

Attachment Type: A, K

A1-NM Attachment

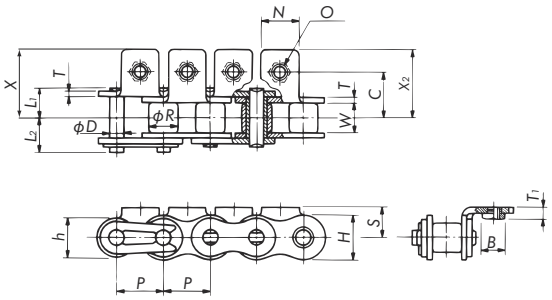

A2-NM Attachment

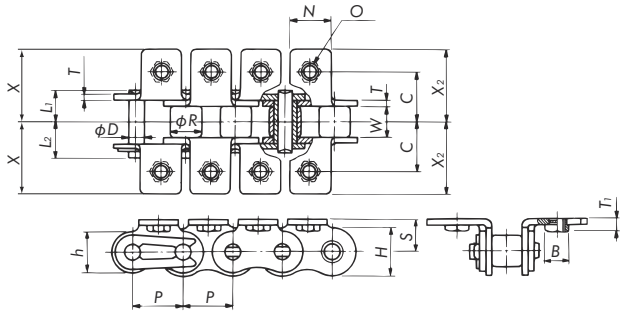

Attachment Dimensions

Size & Press Nut	Pitch *P*	Width Between Inner Link Plates *W*	Roller Dia. *R*	Pin			Plate			Attachment							
				Dia. *D*	L_1	L_2	Width *h*	Width *H*	Thickness *T*	*C*	*N*	*B*	*S*	*X*	X_2	T_1	*O*
RS40-NM3	12.70	7.95	7.92	3.97	8.25	9.95	10.4	12.0	1.5	12.7	9.5	5.5	8.0	17.8	17.8	3.6	M3
RS40-NM4	12.70	7.95	7.92	3.97	8.25	9.95	10.4	12.0	1.5	12.7	9.5	7.0	8.0	17.8	17.8	3.8	M4
RS50-NM4	15.875	9.53	10.16	5.09	10.3	12.0	13.0	15.0	2.0	15.9	12.7	7.0	10.3	23.4	23.4	4.3	M4
RS50-NM5	15.875	9.53	10.16	5.09	10.3	12.0	13.0	15.0	2.0	15.9	12.7	8.0	10.3	23.4	23.4	5.1	M5
RS60-NM5	19.05	12.70	11.91	5.96	12.85	14.75	15.6	18.1	2.4	19.05	15.9	8.0	11.9	28.2	28.2	5.5	M5
RS60-NM6	19.05	12.70	11.91	5.96	12.85	14.75	15.6	18.1	2.4	19.05	15.9	10.0	11.9	28.2	28.2	6.5	M6

Note: 1. Drawings show attachments added on every link.
2. Dimension *B* is the width when nuts are installed on upper and lower surfaces.
3. The above dimensions are nominal dimensions and may differ from actual dimensions.

Model Numbering Example

Press Nut (RS)

RS40-LMC-2LK1-NM4+240L-JR

- Size
- Series
  - [Blank]: General use
  - LMC: Lambda
- Attachment spacing and type
- Press nut
  - NP: Nickel plated
  - NEP: Special coating
- No. of links
- End link

Connecting Link (JL)

RS40-LMC-K1-NM4JL

- Same as at left
- Attachment type (Enter only when attachments are to be installed)
- Connecting link (JL)

Special Extended Pin (Double Pitch / RS)

Special extended pins can be manufactured with a short lead time by using common components.

Special Extended Pin (Double Pitch)

Attachment Type: EP

EP Attachment

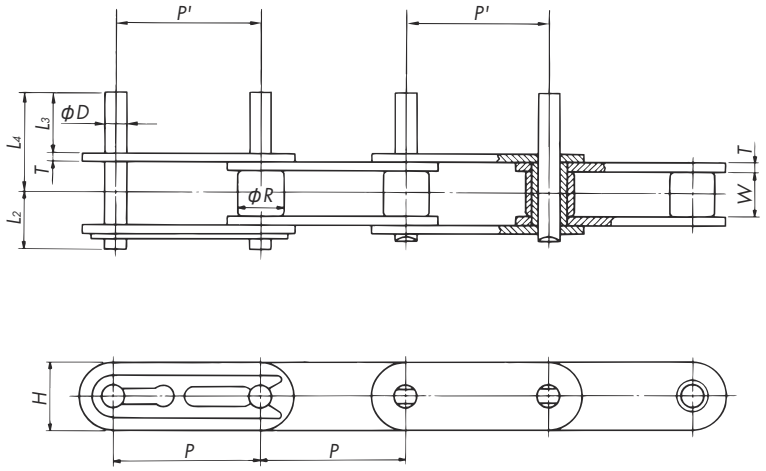

Attachment Dimensions

Size, Attachment Type, Extended Pin	Pitch P	Width Between Inner Link Plates W	Roller Dia. R		Pin		Plate		Pin	
			S Roller	R Roller	Dia. D	L_2	Width H	Thickness T	L_3	L_4
RF2040-EPL15.4	25.40	7.95	7.92	15.88	3.97	9.95	12.0	1.5	15.4	22.65
RF2040-EPL20.3	25.40	7.95	7.92	15.88	3.97	9.95	12.0	1.5	20.3	27.55
RF2040-EPL29.8	25.40	7.95	7.92	15.88	3.97	9.95	12.0	1.5	29.8	37.15
RF2050-EPL19.3	31.75	9.53	10.16	19.05	5.09	12.0	15.0	2.0	19.3	28.5
RF2050-EPL23.8	31.75	9.53	10.16	19.05	5.09	12.0	15.0	2.0	23.8	32.9
RF2050-EPL31.2	31.75	9.53	10.16	19.05	5.09	12.0	15.0	2.0	31.2	40.3
RF2060-EPL16.5	38.10	12.70	11.91	22.23	5.96	16.55	17.2	3.2	16.5	29.65
RF2060-EPL20.8	38.10	12.70	11.91	22.23	5.96	16.55	17.2	3.2	20.8	33.95
RF2060-EPL28.2	38.10	12.70	11.91	22.23	5.96	16.55	17.2	3.2	28.2	41.35
RF2080-EPL27.1	50.80	15.88	15.88	28.58	7.94	21.3	23.0	4.0	27.1	43.5
RF2080-EPL35.4	50.80	15.88	15.88	28.58	7.94	21.2	23.0	4.0	35.4	51.8
RF2080-EPL56.5	50.80	15.88	15.88	28.58	7.94	21.2	23.0	4.0	56.5	72.9
RF2100-EPL34.0	63.50	19.05	19.05	39.69	9.54	24.9	28.6	4.8	34.0	53.6
RF2100-EPL43.7	63.50	19.05	19.05	39.69	9.54	24.9	28.6	4.8	43.7	63.3
RF2100-EPL69.9	63.50	19.05	19.05	39.69	9.54	24.9	28.6	4.8	69.9	89.5

Note: 1. Actual dimension *P'* may differ from *P*. Contact a Tsubaki representative for details.
2. Extended pins on standard LMC chain are treated with a special nickel plating. Consequently, pin end diameter will be slightly larger.
3. Attachments shown are S roller type. However, the dimensions for attachments are the same when R rollers are used. Also, the drawings show attachments added on every link.
4. The above dimensions are nominal dimensions and may differ from actual dimensions.

Model Numbering Example

Special Extended Pin (Double Pitch)

RF2040S-LMC-2LEPL15.4+120L-JR

- Size
- Roller type: S: S roller; R: R roller
- Series: [Blank]: General use; LMC: Lambda
- Extended pin spacing
- With extended pin
- Extended pin projection (Dimension L_3 in mm)
- No. of links
- End link

Connecting Link (JL)

RF2040-LMC-2LEPL15.4-JL

- Same as at left
- Same as at left
- Ⓐ
- Connecting link (JL)

Note: When attachment spacing is four (4) links or more, there is no need to specify the Ⓐ part.

Special Extended Pin (RS)

Attachment Type: EP

EP Attachment

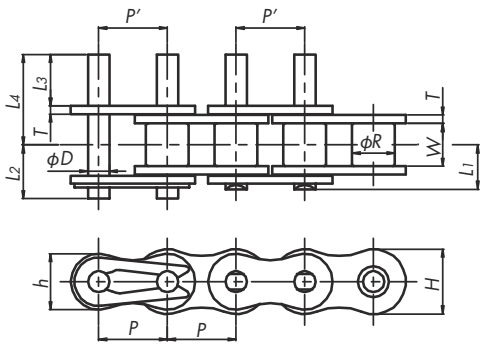

■ Attachment Dimensions

Size, Attachment Type, Extended Pin	Pitch *P*	Width Between Inner Link Plates *W*	Roller Dia. *R*	Pin			Plate			Pin	
				Dia. *D*	L_1	L_2	Width *h*	Width *H*	Thickness *T*	L_3	L_4
RS40-EPL15.4	12.70	7.95	7.92	3.97	8.25	9.95	10.4	12.0	1.5	15.4	22.65
RS40-EPL20.3	12.70	7.95	7.92	3.97	8.25	9.95	10.4	12.0	1.5	20.3	27.55
RS40-EPL29.8	12.70	7.95	7.92	3.97	8.25	9.95	10.4	12.0	1.5	29.8	37.15
RS50-EPL19.3	15.875	9.53	10.16	5.09	10.3	12.0	13.0	15.0	2.0	19.3	28.5
RS50-EPL23.8	15.875	9.53	10.16	5.09	10.3	12.0	13.0	15.0	2.0	23.8	32.9
RS50-EPL31.2	15.875	9.53	10.16	5.09	10.3	12.0	13.0	15.0	2.0	31.2	40.3
RS60-EPL19.9	19.05	12.70	11.91	5.96	12.85	14.75	15.6	18.1	2.4	19.9	31.45
RS60-EPL24.2	19.05	12.70	11.91	5.96	12.85	14.75	15.6	18.1	2.4	24.2	35.75
RS60-EPL31.6	19.05	12.70	11.91	5.96	12.85	14.75	15.6	18.1	2.4	31.6	43.15
RS80-EPL30.8	25.40	15.88	15.88	7.94	16.25	19.25	20.8	24.1	3.2	30.8	45.55
RS80-EPL39.1	25.40	15.88	15.88	7.94	16.25	19.15	20.8	24.1	3.2	39.1	53.85
RS80-EPL42.3	25.40	15.88	15.88	7.94	16.25	19.25	20.8	24.1	3.2	42.3	57.05
RS100-EPL37.7	31.75	19.05	19.05	9.54	19.75	22.85	26.0	30.1	4.0	37.7	55.65
RS100-EPL45.0	31.75	19.05	19.05	9.54	19.75	22.85	26.0	30.1	4.0	45.0	62.95
RS100-EPL50.7	31.75	19.05	19.05	9.54	19.75	22.85	26.0	30.1	4.0	50.7	68.65

Note: 1. Actual dimension *P'* may differ from *P*. Contact a Tsubaki representative for details.
2. Extended pins on standard LMC chain are treated with a special nickel plating. Consequently, pin end diameter will be slightly larger.
3. Drawings show attachments added on every link.
4. The above dimensions are nominal dimensions and may differ from actual dimensions.

Model Numbering Example

Special Extended Pin (RS)

RS40-LMC-1LEPL15.4+240L-JR

Size
Series
[Blank]: General use
LMC: Lambda
Extended pin spacing
With extended pin
Extended pin projection (Dimension L_3 in mm)
No. of links
End link

Connecting Link (JL)

RS40-LMC-1LEPL15.4-JL

Same as at left
Same as at left
Ⓐ
Connecting link (JL)

Note: When attachment spacing is four (4) links or more, there is no need to specify the Ⓐ part. For general-use chain having an attachment spacing of four (4) links or more, enter "**PJL**" (instead of **JL**) for the connecting link.

Upper Surface Ground Attachment (Double Pitch / RS)

The rollers are ground, and the upper surfaces of the attachments are ground as well.

Upper Surface Ground Attachment (Double Pitch)

Attachment Type: PG

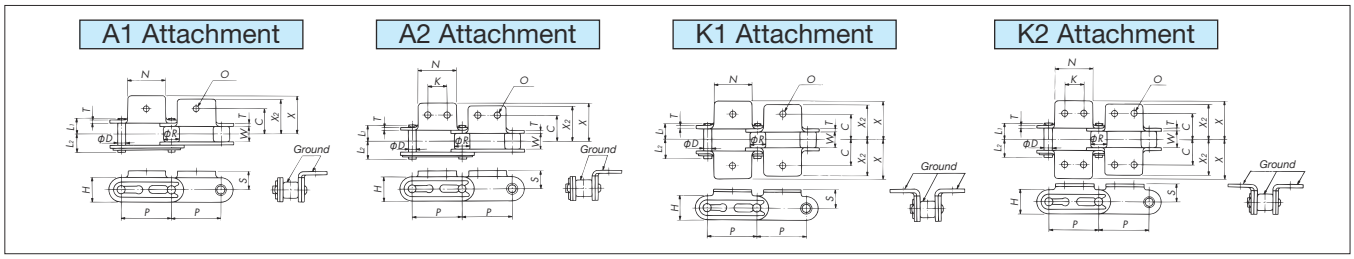

Attachment Dimensions

Size & Series	Pitch *P*	Width Between Inner Link Plates *W*	Roller Dia. *R*		Pin			Plate		Attachment						
			S Roller	R Roller	Dia. *D*	L_1	L_2	Width *H*	Thickness *T*	*C*	*K*	*N*	*O*	*S*	*X*	X_2
RF2040-PG	25.40	7.95	7.90	15.80	3.97	8.25	9.95	12.0	1.5	12.7	9.5	19.1	3.6	8.9	19.3	17.6
RF2050-PG	31.75	9.53	10.12	18.97	5.09	10.30	12.0	15.0	2.0	15.9	11.9	23.8	5.2	10.9	24.2	22.0
RF2060-PG	38.10	12.70	11.88	22.15	5.96	14.55	16.55	17.2	3.2	21.45	14.3	28.6	5.2	14.4	31.5	28.2
RF2080-PG	50.80	15.88	15.71	28.50	7.94	18.30	20.9	23.0	4.0	27.8	19.1	38.1	6.8	18.8	40.7	36.6

Note: 1. Chains without attachments are available only with S rollers.
2. On chains without attachments, the outer surface of rollers is not ground. In this case, the roller diameter will differ from the dimensions given above. Roller diameter (*R*) for RF2040S is 7.92, RF2050S is 10.16, RF2060S is 11.91, and RF2080S is 15.88.
3. The top surface of link plates is ground on chains without attachments. In this case, the plate width *H* will differ from the dimensions given above. Width (*H*) for RF2040S is 11.9, RF2050S is 14.9, RF2060S is 17.1, and RF2080S is 22.7.
4. The above dimensions are nominal dimensions and may differ from actual dimensions.

Model Numbering Example

Upper Surface Ground Attachment (Double Pitch)

RF2040S-PG-2LK1+120L-JR

Size
Roller type
Series
No. of links
End link
Attachment type
Attachment spacing

Connecting Link (JL)

RF2040-PG-K1-JL

Connecting link (JL)
Same as at left
Attachment type
(Enter only when attachments are to be installed)

Upper Surface Ground Attachment (RS)

Attachment Type: PG

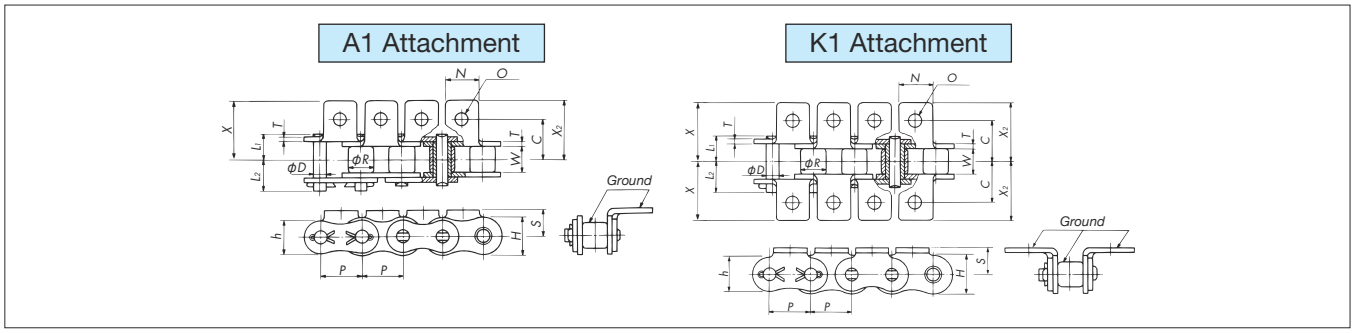

Attachment Dimensions

Size & Series	Pitch *P*	Width Between Inner Link Plates *W*	Roller Dia. *R*	Pin			Plate			Attachment					
				Dia. *D*	L_1	L_2	Width *h*	Width *H*	Thickness *T*	*C*	*N*	*O*	*S*	*X*	X_2
RS40-PG	12.70	7.95	7.90	3.97	8.25	9.95	10.4	12.0	1.5	12.7	9.5	3.6	7.8	17.8	17.8
RS50-PG	15.875	9.53	10.12	5.09	10.3	12.0	13.0	15.0	2.0	15.9	12.7	5.2	10.1	23.4	23.4
RS60-PG	19.05	12.70	11.88	5.96	12.85	14.75	15.6	18.1	2.4	19.05	15.9	5.2	11.6	28.2	28.2
RS80-PG	25.40	15.88	15.71	7.94	16.25	19.25	20.8	24.1	3.2	25.4	19.1	6.8	15.6	36.6	36.6
RS100-PG	31.75	19.05	18.83	9.54	19.75	22.85	26.0	30.1	4.0	31.75	25.4	8.7	19.4	44.9	44.9
RS120-PG	38.10	25.40	22.01	11.11	24.9	28.9	31.2	36.2	4.8	38.1	28.6	10.3	22.6	55.8	51.2
RS140-PG	44.45	25.40	25.18	12.71	26.9	31.7	36.4	42.2	5.6	44.5	34.9	11.9	28.2	63.1	58.0
RS160-PG	50.80	31.75	28.36	14.29	31.85	36.85	41.6	48.2	6.4	50.8	38.1	14.3	31.4	73.7	66.0

Note: 1. *X* and X_2 are the width of the attachments installed on the outer (pin) link and inner (roller) link, respectively.
2. The above dimensions are nominal dimensions and may differ from actual dimensions.

Model Numbering Example

Upper Surface Ground Attachment (RS)

RS40-PG-1LK1+240L-JR

Size
Series
No. of links
End link
Attachment type
Attachment spacing

Connecting Link (JL)

RS40-PG-K1-JL

Connecting link (JL)
Same as at left
Attachment type
(Enter only when attachments are to be installed)

Large Size RS Attachment

Large Size RS Attachment

Attachment for chain sizes RS180 and larger.

K1 Attachment

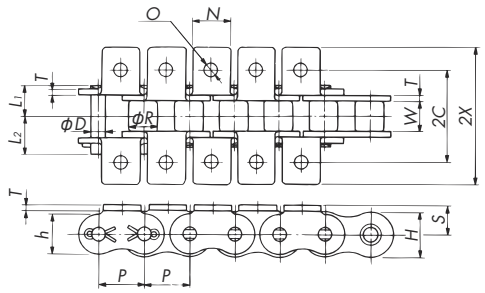

Note: Applicable chain sizes are RS180, RS200, RS240, RF320-T, and RF400-T. Drawing shows RS180. The attachment part on RS200 is RF, while the entire chain is RF for sizes RS320 and larger.

SK1 Attachment

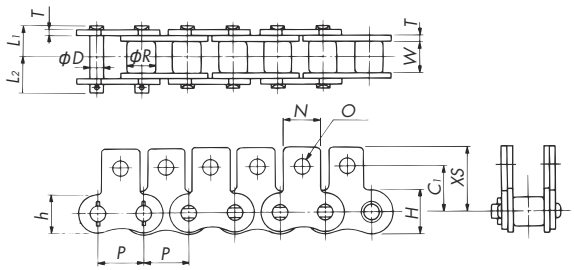

Note: Applicable chain sizes are RS200 and RS240. Drawing shows RS240. Connecting links for RS200 use cotter pins. The attachment part on RS200 is RF.

WK1 Attachment

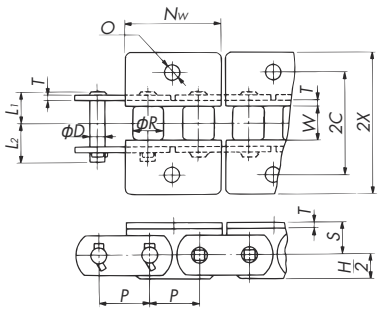

Note: Applicable chain size is RF400-T.

WK2 Attachment

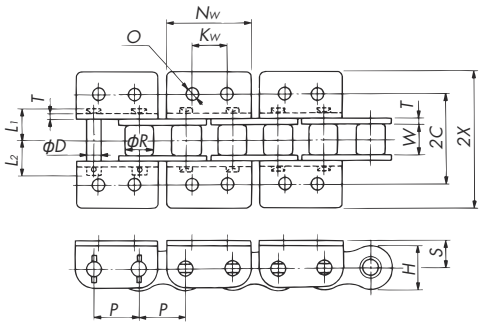

Note: Applicable chain sizes are RS200 and RS240.

WSK2 Attachment

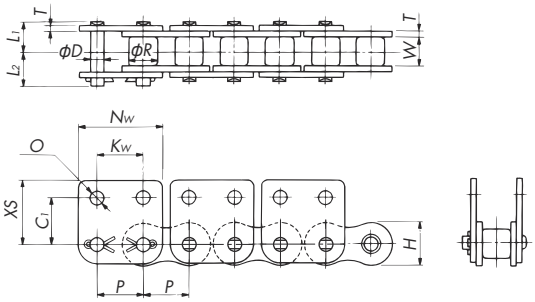

Note: Applicable chain sizes are RS200, RS240, and RF400-T. Drawing shows RS200. External appearance for other sizes will differ.

◆ **Attachment Types and Attaching Links**

Size	K1	SK1	WK1	WK2	WSK2
RS180	PL or RL	–	–	–	–
RS200	PL or RL	PL	–	PL	PL
RS240	PL or RL	PL or RL	–	PL	PL
RF320-T	PL	–	–	–	–
RF400-T	PL	–	RL	–	PL

PL: pin (outer) link; RL: roller (inner) link

■ Attachment Dimensions

Size & Series	Pitch P	Roller Dia. R	Width Between Inner Link Plates W	Pin			Plate			2C	C1	N	O	S	2X	XS	Nw	Kw
				Dia. D	L1	L2	Width h	Width H	Thickness T									
RS180	57.15	35.71	35.72	17.46	35.65	42.45	46.8	54.2	7.15	114.3	-	42.0	15.0	35.8	160.3	-	-	-
RS200	63.50	39.68	38.10	19.85	39.0	44.8	52.0	60.3	8.0	127.0	63.5	48.0	17.5	42.9	167.0	85.5	115.4	63.5
RS240	76.20	47.63	47.63	23.81	47.9	55.5	62.4	72.4	9.5	152.4	76.2	57.2	21.0	47.7	195.8	106.7	138.5	57.0
RF320-T	101.6	63.5	63.65	31.75	63.8	77.6	-	92	12.7	203.2	-	76.2	25.4	85.5	281.3	-	-	-
RF400-T	127.0	79.38	79.3	39.68	79.65	92.65	100	120	16.0	254.0	120	101.6	38.0	79.4	356.0	180	245	127

Note: The above dimensions are nominal dimensions and may differ from actual dimensions.

Model Numbering Example

RS180-1LK1+54L-JR

- Size
- No. of links
- End link
- Attachment type
- Attachment spacing

Double Pitch Deep Link / Inwardly Bent Attachment

Double Pitch Deep Link

Attachment Type: DL

Height of the link plates (dimension H_1) is higher than the top of the roller on double pitch base chain. Allows materials to be placed directly on the chain, even with R rollers.

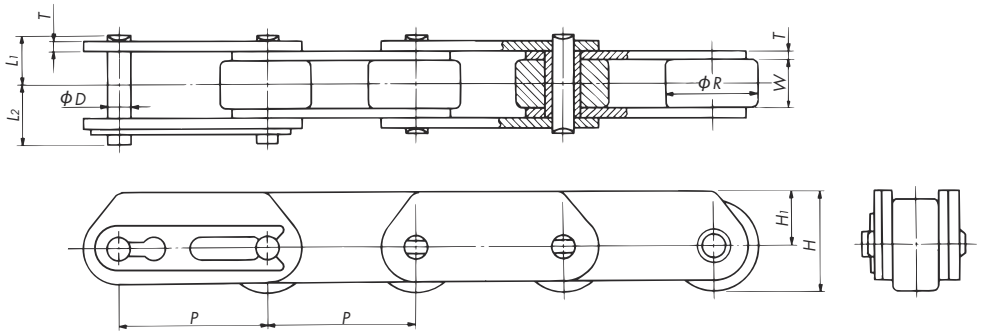

Attachment Dimensions

Size, Roller Type, Series	Pitch P	Width Between Inner Link Plates W	Roller Dia. R	Chain Height H	Pin			Plate		Connecting Link
					Dia. D	L_1	L_2	Width H_1	Thickness T	
RF2040R-DL	25.40	7.95	15.88	(17.9)	3.97	8.25	9.95	10.0	1.5	Spring clip
RF2050R-DL	31.75	9.53	19.05	(21.5)	5.09	10.3	12.0	12.0	2.0	Spring clip
RF2060R-DL	38.10	12.70	22.23	(25.1)	5.96	14.55	16.55	14.0	3.2	Spring clip
RF2080R-DL	50.80	15.88	28.58	(32.2)	7.94	18.30	20.90	18.0	4.0	Cotter pin

Note: The above dimensions are nominal dimensions and may differ from actual dimensions.

Model Numbering Example

Double Pitch Deep Link

RF2040S-DL+120L-JR

Size
Roller type
Series
No. of links
End link

Connecting Link (JL)

RF2040-DL-JL

Same as at left
Connecting link (JL)

Inwardly Bent Attachment

Attachment Type: UM

The top edges of the attachment are chamfered to protect conveyed materials from scratches. Allows conveyed materials to be placed directly on the chain, or be conveyed by sandwiching between chains.

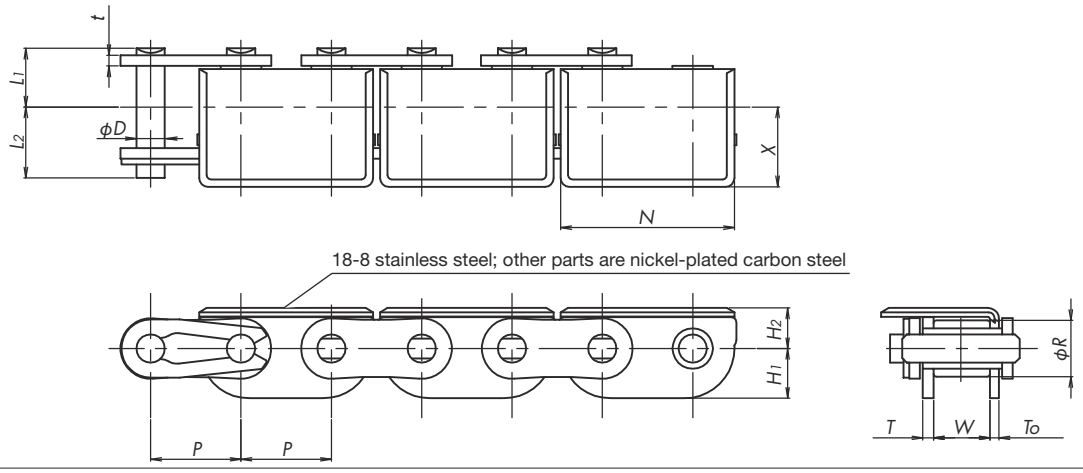

Attachment Dimensions

Size & Series	Pitch P	Width Between Inner Link Plates W	Roller Dia. R	Pin			Plate						
				Dia. D	L_1	L_2	H_1	H_2	N	X	T	t	To
RS40-UM	12.70	7.95	7.92	3.97	8.25	9.95	7.0	5.7	24.4	11.2	1.5	1.5	1.25
RS50-UM	15.875	9.53	10.16	5.09	10.3	12.0	8.5	7.1	30.5	13.1	2.0	2.0	1.5

Note: 1. When used as a replacement chain, carefully check dimension H_2 to avoid possible interference.
2. Max. allowable load is not the same as RS attachment chain.
3. RS sprockets (type B) can be used if the sprocket has 23 or more teeth. If the sprocket has fewer than 23 teeth, it will cause interference between the sprocket hub and the chain plates. A special sprocket is thus required. Contact a Tsubaki representative for details.
4. The above dimensions are nominal dimensions and may differ from actual dimensions.

Model Numbering Example

Inwardly Bent Attachment

RS40-UM+240L-JR

Size
Series
No. of links
End link

Connecting Link (JL)

RS40-UM-JL

Same as at left
Connecting link (JL)

Guide Roller (Double Pitch / RS)

Guide rollers prevent meandering and can be used as running rollers. (Not for curved chain.)

Guide Roller (Double Pitch)

Attachment Type: GR

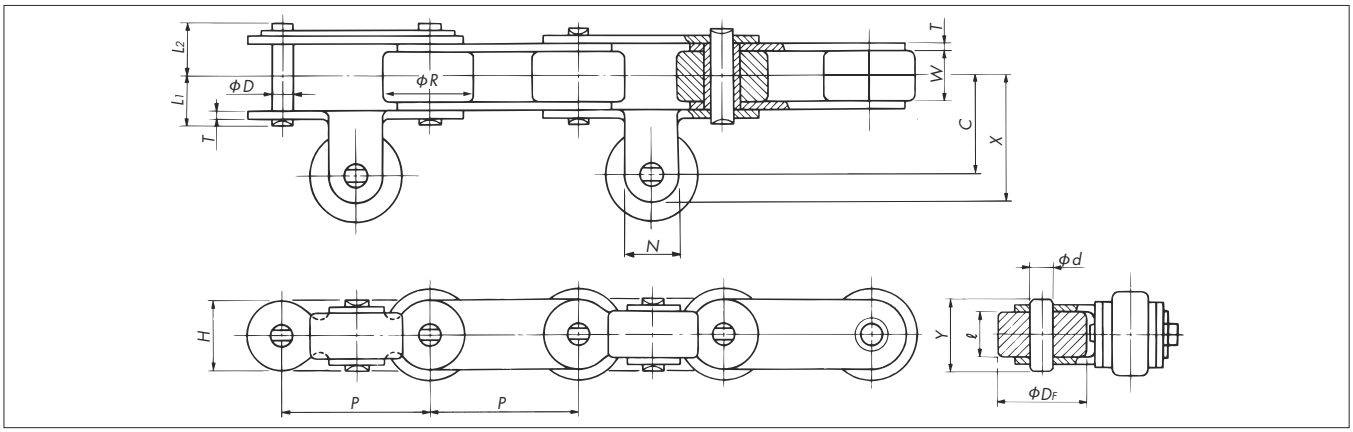

Attachment Dimensions

Size & Attachment Type	Pitch P	Width Between Inner Link Plates W	Roller Dia. R		Pin			Plate		Attachment					Guide Roller	
			S Roller	R Roller	Dia. D	L_1	L_2	Width H	Thickness T	C	X	N	Y	d	D_F	ℓ
RF2040-GR	25.40	7.95	7.92	15.88	3.97	8.25	9.95	12.0	1.5	17.45	22.20	9.5	13.2	3.97	15.88	7.8
RF2050-GR	31.75	9.53	10.16	19.05	5.09	10.30	12.00	15.0	2.0	21.15	27.50	12.7	16.2	5.09	19.05	9.4
RF2060-GR	38.10	12.70	11.91	22.23	5.96	14.55	16.55	17.2	3.2	27.00	34.95	15.9	22.2	5.96	22.23	12.6
RF2080-GR	50.80	15.88	15.88	28.58	7.94	18.30	20.90	23.0	4.0	33.35	42.90	19.1	27.4	7.94	28.58	15.8
RF2100-GR	63.50	19.05	19.05	39.69	9.54	21.80	24.50	28.6	4.8	42.85	55.55	25.4	32.7	9.54	39.69	19.0

Note: 1. Attachments shown are R roller type. However, the dimensions for attachments are the same when S rollers are used.
2. The above dimensions are nominal dimensions and may differ from actual dimensions.

Model Numbering Example

Guide Roller (Double Pitch)

RF2040S-2LGR+120L-JR

- Size
- Roller type
- No. of links
- End link
- With guide roller
- Guide roller spacing

Connecting Link (JL)

RF2040-GR-JL

- Same as at left
- Connecting link (JL)

Guide Roller (RS)

Attachment Type: GR

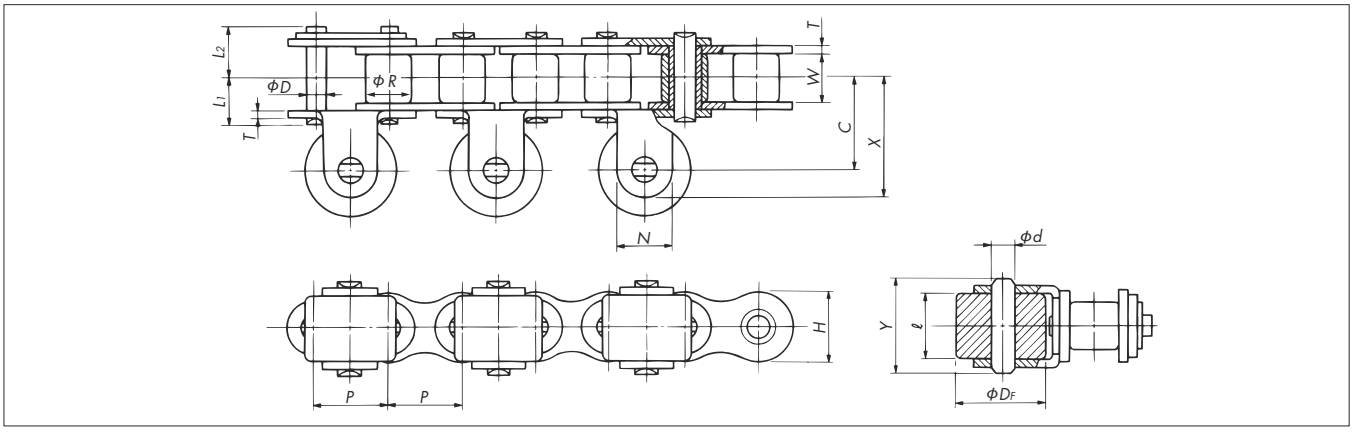

Attachment Dimensions

Size & Attachment Type	Pitch P	Width Between Inner Link Plates W	Roller Dia. R	Pin			Plate		Attachment					Guide Roller	
				Dia. D	L_1	L_2	Width H	Thickness T	C	X	N	Y	d	D_F	ℓ
RS40-GR	12.70	7.95	7.92	3.97	8.25	9.95	12.0	1.5	17.45	22.20	9.5	16.5	3.97	15.88	11.05
RS50-GR	15.875	9.53	10.16	5.09	10.30	12.00	15.0	2.0	21.15	27.50	12.7	20.6	5.09	19.05	13.50
RS60-GR	19.05	12.70	11.91	5.96	12.85	14.75	18.1	2.4	25.40	33.35	15.9	25.7	5.96	22.23	17.65
RS80-GR	25.40	15.88	15.88	7.94	16.25	19.25	24.1	3.2	31.75	41.30	19.1	32.5	7.94	28.58	22.50
RS100-GR	31.75	19.05	19.05	9.54	19.75	22.85	30.1	4.0	41.30	54.00	25.4	39.5	9.54	39.69	27.40

Note: The above dimensions are nominal dimensions and may differ from actual dimensions.

Model Numbering Example

Guide Roller (RS)

RS40-2LGR+240L-JR

- Size
- No. of links
- End link
- With guide roller
- Guide roller spacing

Connecting Link (JL)

RS40-GR-JL

- Same as at left
- Connecting link (JL)

Threaded Extended Pin (Double Pitch / RS)

Extended pins (hardened steel) are threaded to enable tools, jigs, etc. to be attached.
Mounting a tool or jig that straddles two pins is constrained by *P'*, the distance between pin centerlines.
Please contact a Tsubaki representative about dimension *P'*.

Threaded Extended Pin (Double Pitch)

Attachment Type: EN

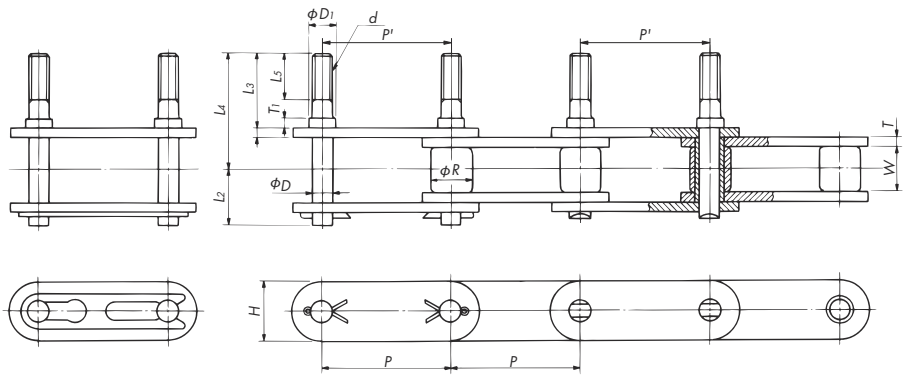

Attachment Dimensions

Size & Series	Pitch *P*	Width Between Inner Link Plates *W*	Roller Dia. *R*		Pin					Plate	
			S Roller	R Roller	Dia. *D*	D_1	*d*	T_1	L_2	Width *H*	Thickness *T*
RF2040-EN	25.40	7.95	7.92	15.88	3.97	5.00	M4	1.5	9.95	12.0	1.5
RF2050-EN	31.75	9.53	10.16	19.05	5.09	6.35	M5	2.0	12.0	15.0	2.0
RF2060-EN	38.10	12.70	11.91	22.23	5.96	8.35	M6	2.4	16.55	17.2	3.2
RF2080-EN	50.80	15.88	15.88	28.58	7.94	9.88	M8	3.2	20.90	23.0	4.0
RF2100-EN	63.50	19.05	19.05	39.69	9.54	11.46	M10	4.0	24.50	28.6	4.8

Note: 1. Attachments shown are S roller type. However, the dimensions for attachments are the same when R rollers are used.
2. Please specify dimensions L_3 and L_5, or L_4 and L_5.
3. The above dimensions are nominal dimensions and may differ from actual dimensions.

Threaded Extended Pin (RS)

Attachment Type: EN

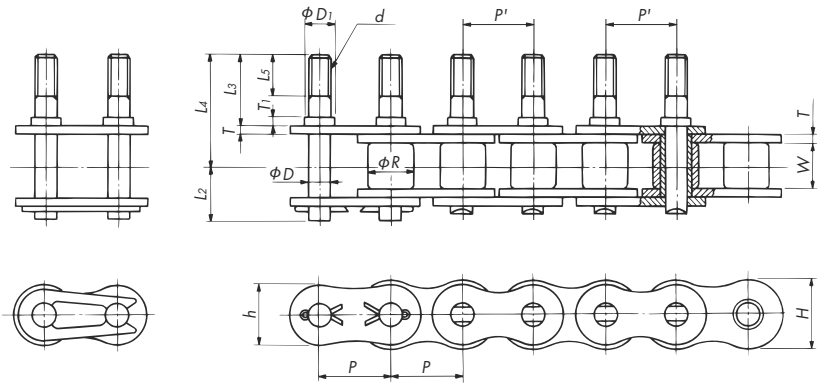

Attachment Dimensions

Size & Series	Pitch *P*	Width Between Inner Link Plates *W*	Roller Dia. *R*	Pin					Plate		
				Dia. *D*	D_1	*d*	T_1	L_2	Width *h*	Width *H*	Thickness *T*
RS40-EN	12.70	7.95	7.92	3.97	5.00	M4	1.5	9.95	10.4	12.0	1.5
RS50-EN	15.875	9.53	10.16	5.09	6.35	M5	2.0	12.0	13.0	15.0	2.0
RS60-EN	19.05	12.70	11.91	5.96	8.35	M6	2.4	14.75	15.6	18.1	2.4
RS80-EN	25.40	15.88	15.88	7.94	9.88	M8	3.2	19.25	20.8	24.1	3.2
RS100-EN	31.75	19.05	19.05	9.54	11.46	M10	4.0	22.85	26.0	30.1	4.0
RS120-EN	38.10	25.40	22.23	11.11	13.07	M12	4.8	28.90	31.2	36.2	4.8

Note: 1. Please specify dimensions L_3 and L_5, or L_4 and L_5.
2. The above dimensions are nominal dimensions and may differ from actual dimensions.

Extended Pin with Spring Clip (Double Pitch / RS)

The spring clip allows the attachment of tools, etc.
Mounting a tool or jig that straddles two pins is constrained by *P'*, the distance between pin centerlines.
Please contact a Tsubaki representative about dimension *P'*.

Extended Pin with Spring Clip (Double Pitch)

Attachment Type: EC

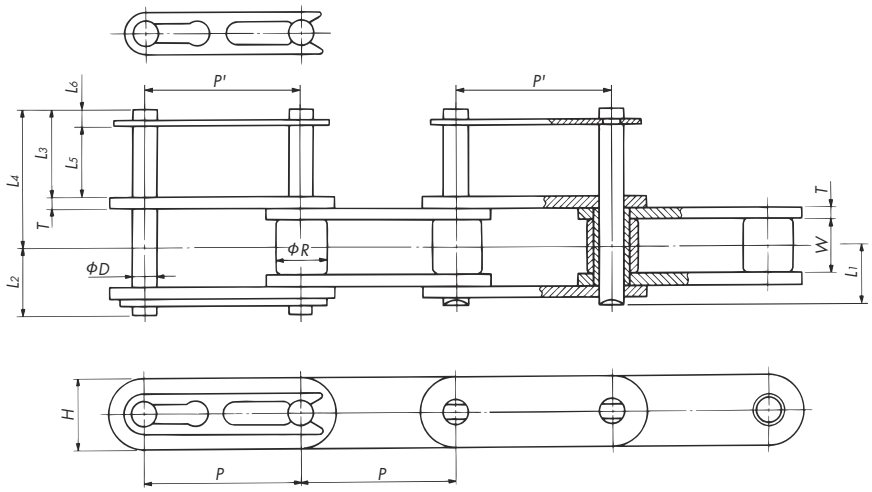

Attachment Dimensions

Size & Series	Pitch *P*	Width Between Inner Link Plates *W*	Roller Dia. *R*		Pin				Plate	
			S Roller	R Roller	Dia. *D*	L_1	L_2	L_6	Width *H*	Thickness *T*
RF2040-EC	25.40	7.95	7.92	15.88	3.97	8.25	9.95	(2.8)	12.0	1.5
RF2050-EC	31.75	9.53	10.16	19.05	5.09	10.3	12.0	(3.0)	15.0	2.0
RF2060-EC	38.10	12.70	11.91	22.23	5.96	14.55	16.55	(3.4)	17.2	3.2

Note: 1. Please specify dimensions L_3 and L_5, or L_4 and L_5.
2. Please specify the spacing of the extended pins (with spring clip).
3. Attachments shown are R roller type. However, the dimensions for attachments are the same when S rollers are used.
4. The above dimensions are nominal dimensions and may differ from actual dimensions.

Extended Pin with Spring Clip (RS)

Attachment Type: EC

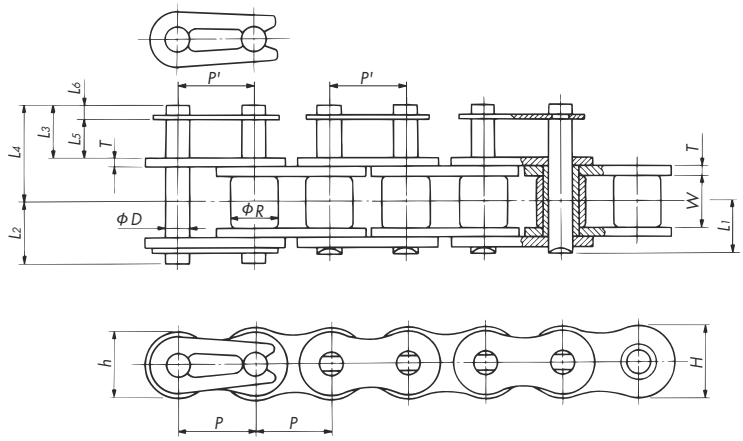

Attachment Dimensions

Size & Series	Pitch *P*	Width Between Inner Link Plates *W*	Roller Dia. *R*	Pin				Plate		
				Dia. *D*	L_1	L_2	L_6	Width *h*	Width *H*	Thickness *T*
RS40-EC	12.70	7.95	7.92	3.97	8.25	9.95	(2.8)	10.4	12.0	1.5
RS50-EC	15.875	9.53	10.16	5.09	10.3	12.0	(3.0)	13.0	15.0	2.0
RS60-EC	19.05	12.70	11.91	5.96	12.85	14.75	(3.4)	15.6	18.1	2.4

Note: 1. Please specify dimensions L_3 and L_5, or L_4 and L_5.
2. Please specify the spacing of the extended pins (with spring clip).
3. The above dimensions are nominal dimensions and may differ from actual dimensions.

Stay Pin (Double Pitch / RS)

Pins are made longer to form parallel strands. Conveyed materials can be placed directly on the pins. Installing wire mesh is one example of use.

Stay Pin (Double Pitch)

Attachment Type: ST

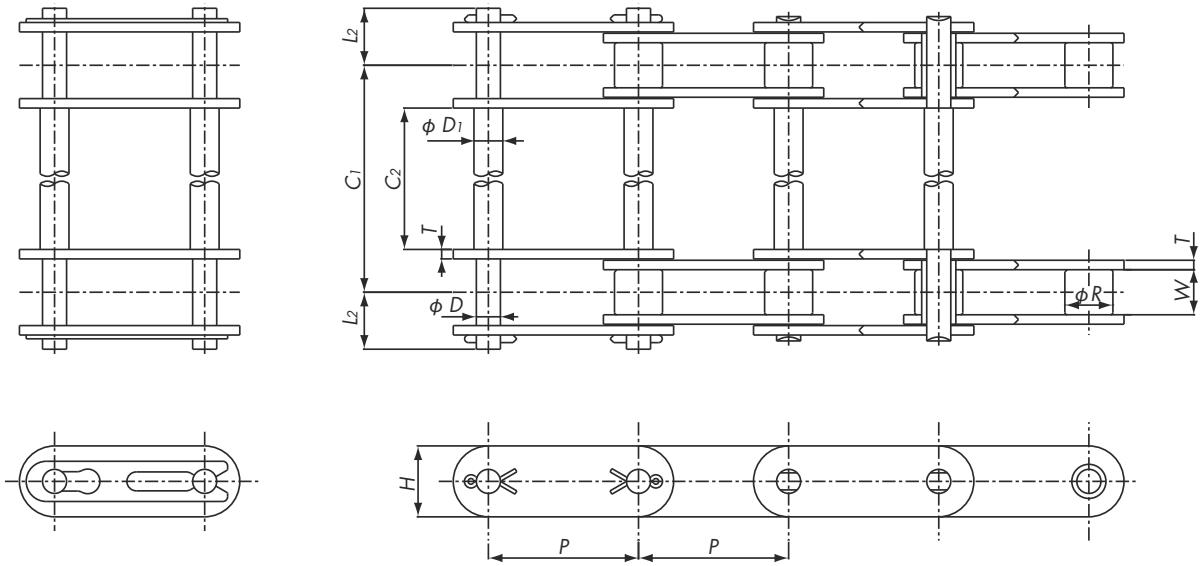

■ Attachment Dimensions

Size & Series	Pitch P	Width Between Inner Link Plates W	Roller Dia. R		Pin				Plate	
			S Roller	R Roller	Dia. D	D_1	L_2	C_1, C_2	Width H	Thickness T
RF2040-ST	25.40	7.95	7.92	15.88	3.97	5.84 〈5.2 〉	9.95	Please specify dimension C_1 or C_2.	12.0	1.5
RF2050-ST	31.75	9.53	10.16	19.05	5.09	6.35 〈6.1 〉	12.0		15.0	2.0
RF2060-ST	38.10	12.70	11.91	22.23	5.96	8.35 〈8.07〉	16.55		17.2	3.2
RF2080-ST	50.80	15.88	15.88	28.58	7.94	9.88	20.90		23.0	4.0
RF2100-ST	63.50	19.05	19.05	39.69	9.54	11.46	24.50		28.6	4.8
RF2120-ST	76.20	25.40	22.23	44.45	11.11	13.07	30.55		34.4	5.6
RF2160-ST	101.60	31.75	28.58	57.15	14.29	17.90	38.45		48.2	7.15

Note: 1. Base chain may be secured by spring clips or cotter pins depending on the length of the stay pins.
2. Total width ($C_1 + 2L_2$) should be 400 mm or less. Tsubaki can manufacture chain with this dimension wider than 400 mm, but pin and C_2 specifications may differ. Please inquire for details.
3. Dimension D_1 differs for stainless steel chain. Please inquire for details.
4. This chain is provided with connecting links on both ends.
5. Attachments shown are S roller type. However, the dimensions for attachments are the same when R rollers are used.
6. Figures inside < > are for stainless steel chain.
7. The above dimensions are nominal dimensions and may differ from actual dimensions.

Stay Pin (RS)

Attachment Type: ST

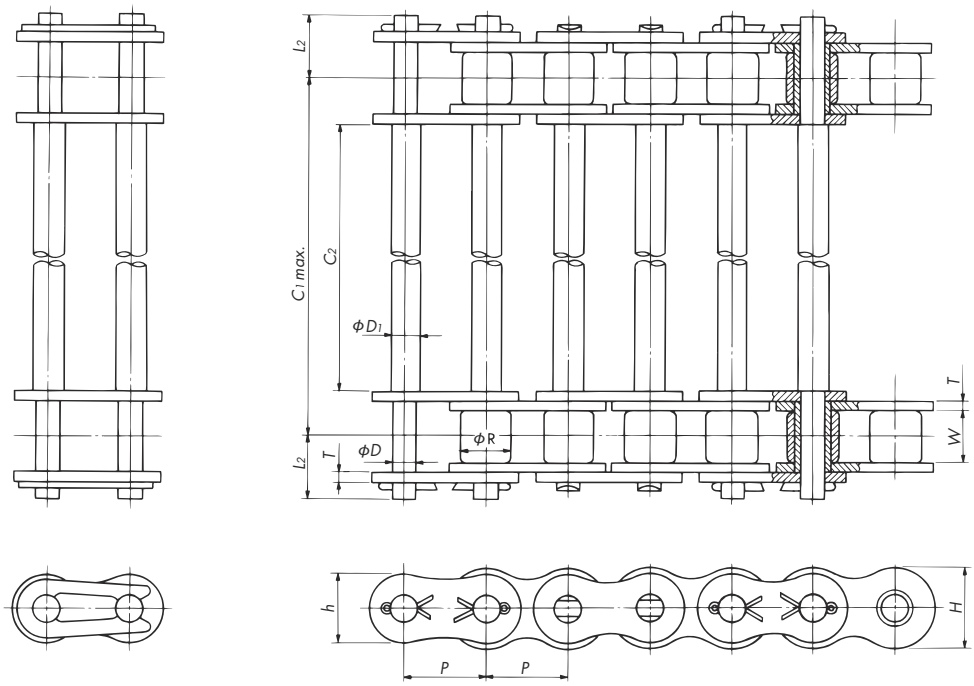

■ Attachment Dimensions

Size & Series	Pitch P	Width Between Inner Link Plates W	Roller Dia. R	Pin				Plate		
				Dia. D	D_1	L_2	C_1, C_2	Width h	Width H	Thickness T
RS35-ST	9.525	4.78	(5.08)	3.59	5.0	6.85	Please specify dimension C_1 or C_2.	7.8	9.0	1.25
RS40-ST	12.70	7.95	7.92	3.97	5.84 〈5.2 〉	9.95		10.4	12.0	1.5
RS50-ST	15.875	9.53	10.16	5.09	6.35 〈6.1 〉	12.0		13.0	15.0	2.0
RS60-ST	19.05	12.70	11.91	5.96	8.35 〈8.07〉	14.75		15.6	18.1	2.4
RS80-ST	25.40	15.88	15.88	7.94	9.88	19.25		20.8	24.1	3.2
RS100-ST	31.75	19.05	19.05	9.54	11.46	22.85		26.0	30.1	4.0
RS120-ST	38.10	25.40	22.23	11.11	13.07	28.9		31.2	36.2	4.8
RS140-ST	44.45	25.40	25.40	12.71	14.67	31.7		36.4	42.2	5.6
RS160-ST	50.80	31.75	28.58	14.29	17.90	36.85		41.6	48.2	6.4

Note: 1. Base chain may be secured by spring clips or cotter pins depending on the length of the stay pins.
2. Total width ($C_1 + 2L_2$) should be 400 mm or less. Tsubaki can manufacture chain with this dimension wider than 400 mm, but pin and C_2 specifications may differ. Please inquire for details.
3. Dimension D_1 differs for stainless steel chain. Please inquire for details.
4. This chain is provided with connecting links on both ends.
5. Roller diameter R (in parentheses) for RS35-ST is the bush diameter.
6. Figures inside < > are for stainless steel chain.
7. The above dimensions are nominal dimensions and may differ from actual dimensions.

Triangle Attachment / Sticker Attachment

Triangle Attachment

Attachment Type: RE

For conveying various types of bar-like objects.

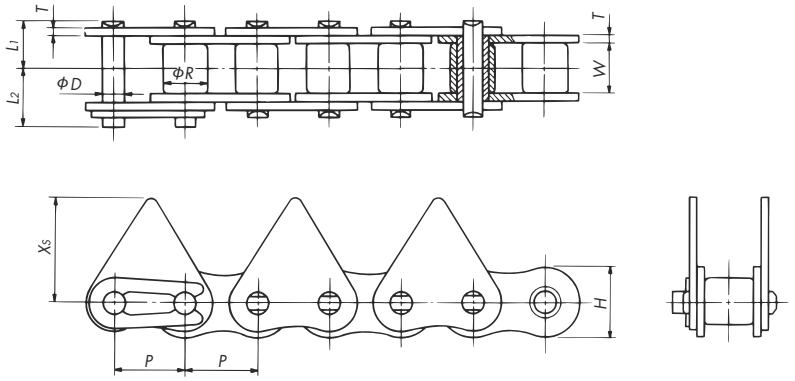

Attachment Dimensions

Size & Series	Pitch P	Width Between Inner Link Plates W	Roller Dia. R	Pin			Plate		
				Dia. D	L_1	L_2	Width H	Thickness T	Height X_S
RS40-RE	12.70	7.95	7.92	3.97	8.25	9.95	12.0	1.5	17.9
RS50-RE	15.875	9.53	10.16	5.09	10.3	12.0	15.0	2.0	23.5
RS60-RE	19.05	12.70	11.91	5.96	12.85	14.75	18.1	2.4	20.8
RS80-RE	25.40	15.88	15.88	7.94	16.25	19.25	24.1	3.2	29.0
RS100-RE	31.75	19.05	19.05	9.54	19.75	22.85	30.1	4.0	34.6

Note: 1. Other types of attachments are available. Please inquire for details.
2. The above dimensions are nominal dimensions and may differ from actual dimensions.

Model Numbering Example

Triangle Attachment

RS40-RE+240L-JR

Size — Series — No. of links — End link

Connecting Link (JL)

RS40-RE-JL

Same as at left — Connecting link (JL)

Sticker Attachment

Attachment Type: FS

The attachment is topped with a sharp barb-like spike to grip flat objects such as film. Please specify the shape of the attachment and the form to which the tip is to be machined (shape left as punched, chamfered edges, ground edges, etc.)

Shape 1 (RS50)

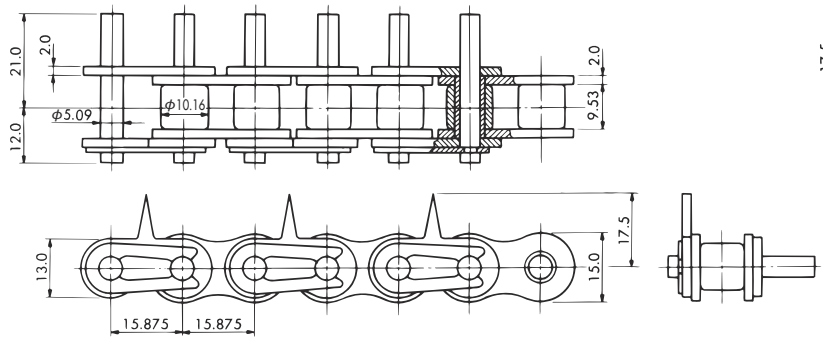

Shape 2 (RS50)

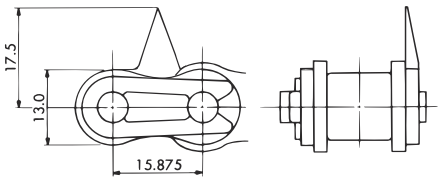

Note: 1. The tip of the attachment is sharp. Take care when handling.
2. The above dimensions are nominal dimensions and may differ from actual dimensions.

Magnetic Attachment / Rubber Attachment

Magnetic Attachment

Attachment Type: MG

A magnet mounted on the attachment holds conveyed objects. Can be used for inclined conveyance.

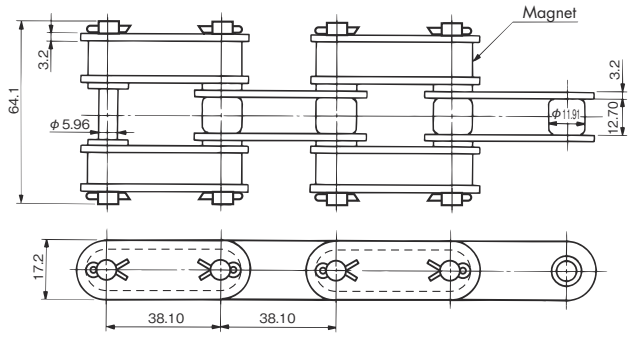

• Three types of magnets are available.

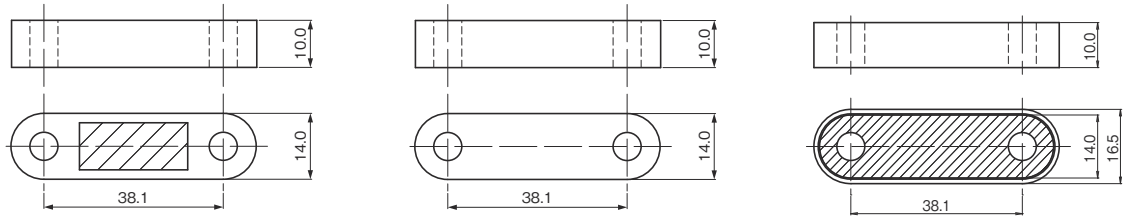

Plastic Case **Plastic Magnet** **Stainless Steel Case**

Rubber Attachment

Attachment Type: RSG

A layer of rubber is bonded to the attachment. The elasticity of the rubber allows objects to be conveyed between chains.

Single Strand **Double Strand**

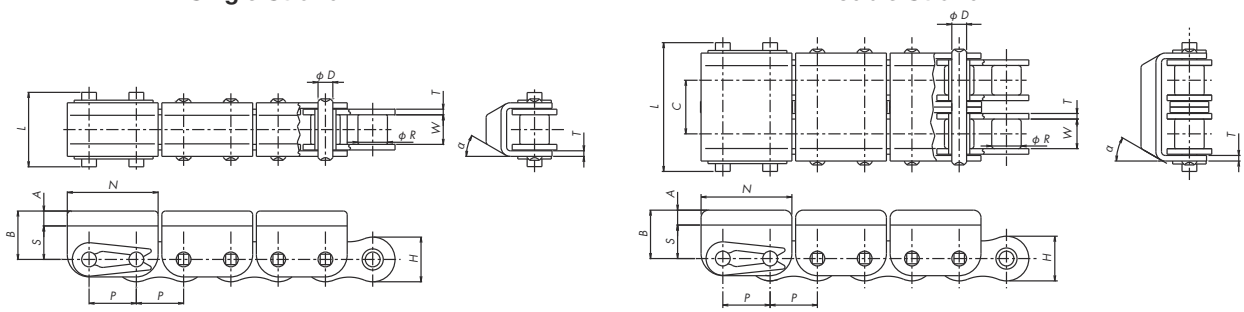

Attachment Dimensions

Size & No. of Strands	No. of Strands	Pitch *P*	Roller Dia. *R*	Width Between Inner Link Plates *W*	Transverse Pitch *C*	Pin		Plate		Attachment				
						Dia. *D*	Length *L*	Width *H*	Thickness *T*	*N*	*S*	*A*	*B*	*α*
RS40	1	12.70	7.92	7.95	—	3.97	20.0	12.0	1.5	24.4	9.0	4.0	13.0	30°
RS40-2	2	12.70	7.92	7.95	14.4	3.97	34.6	12.0	1.5	24.4	9.0	4.0	13.0	30°
RS40-3	3	12.70	7.92	7.95	14.4	3.97	48.8	12.0	1.5	24.4	9.0	6.0	15.0	0°
RS50-2	2	15.875	10.16	9.53	18.1	5.09	42.0	15.0	2.0	28.8	13.0	10.0	23.0	20°
RS60	1	19.05	11.91	12.7	—	5.96	29.5	18.1	2.4	34.6	13.0	10.0	23.0	0°
RS60-2	2	19.05	11.91	12.7	22.8	5.96	52.4	18.1	2.4	34.6	13.0	10.0	23.0	20°

Note: 1. Specifications for the rubber material will be determined in consultation with the customer.
2. Dimensions *L* are all calculated as both ends of the pin being secured with spring clips.
3. The above dimensions are nominal dimensions and may differ from actual dimensions.

Crescent Top Plate / Slat (Riveted)

Crescent Top Plate

Attachment Type: CL

For circulating-loop conveyors operating on a horizontal plane.

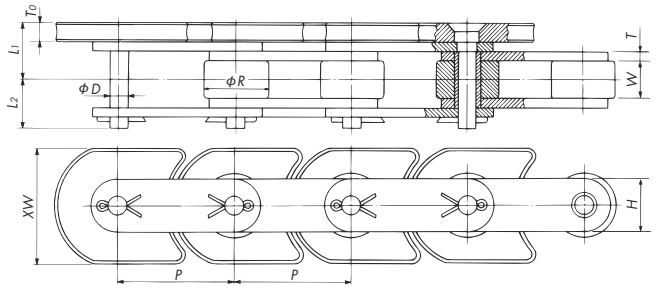

Attachment Dimensions

Size & Series	Pitch P	Roller Dia. R	Width Between Inner Link Plates W	Pin			Plate		Top Plate	
				Dia. D	L_1	L_2	Width H	Thickness T	Width XW	Thickness T_0
RF2050R-CL	31.75	19.05	9.53	5.09	15.05	11.9	15.0	2.0	32	6.0
RF2060R-CL	38.10	22.23	12.70	5.96	19.5	16.95	17.2	3.2	38.1	6.35
RF2080R-CL	50.80	28.58	15.88	7.94	24.2	21.1	23.0	4.0	50	8.0
RF2100R-CL	63.50	39.69	19.05	9.54	25.9	24.3	28.6	4.8	63.5	6.35

Note: The above dimensions are nominal dimensions and may differ from actual dimensions.

Model Numbering Example

Crescent Top Plate

RF2050R-CL+120L-JR

Size
Roller type
Series
No. of links
End link

Connecting Link (JL)

RF2050-CL-JL

Same as at left
Connecting link (JL)

Slat (Riveted)

Attachment Type: SLT

Slats are installed on tough double pitch chain. Ideal for conveying relatively heavy material.

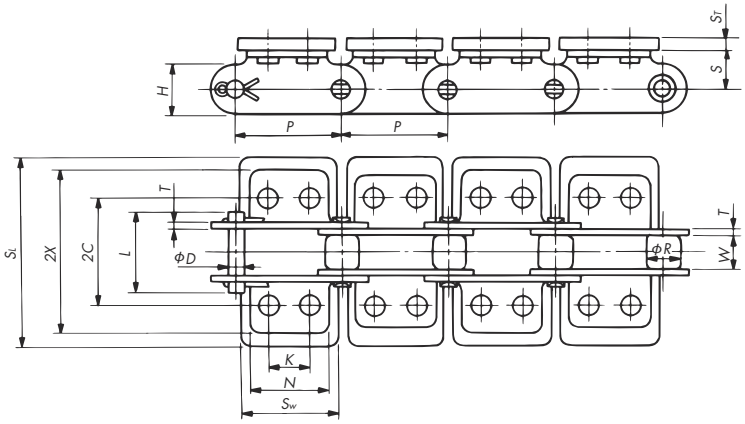

Attachment Dimensions

Size & Series	Pitch P	Width Between Inner Link Plates W	Roller Dia. R		Pin		Plate		2C	2X	K	N	S	S_T	S_L	Sw
			S Roller	R Roller	L	Dia. D	Width H	Thickness T								
RF2040-SLT	25.40	7.95	7.92	15.88	19.4	3.97	12.0	1.5	25.4	38.6	9.5	19.1	9.1	3.2	50.8	24.0
RF2050-SLT	31.75	9.53	10.16	19.05	23.8	5.09	15.0	2.0	31.8	48.4	11.9	23.8	11.1	4.0	63.5	30.0
RF2060-SLT	38.10	12.70	11.91	22.23	33.9	5.96	17.2	3.2	42.9	63.0	14.3	28.6	14.7	4.8	76.2	36.0
RF2080-SLT	50.80	15.88	15.88	28.58	41.9	7.94	23.0	4.0	55.6	81.4	19.1	38.1	19.1	5.6	101.6	48.0

Note: The above dimensions are nominal dimensions and may differ from actual dimensions.

Model Numbering Example

Slat (Riveted)

RF2040S-SLT+120L-PKR

Size
Roller type
Attachment type
No. of links
End link

Connecting Link (JL)

RF2040-SLT-JL

Same as at left
Connecting link (JL)

Slat (Welded) / RS Slat

Slat (Welded)

Attachment Type: SLW

Slats are welded on double pitch chain. Ideal for conveying relatively heavy material.

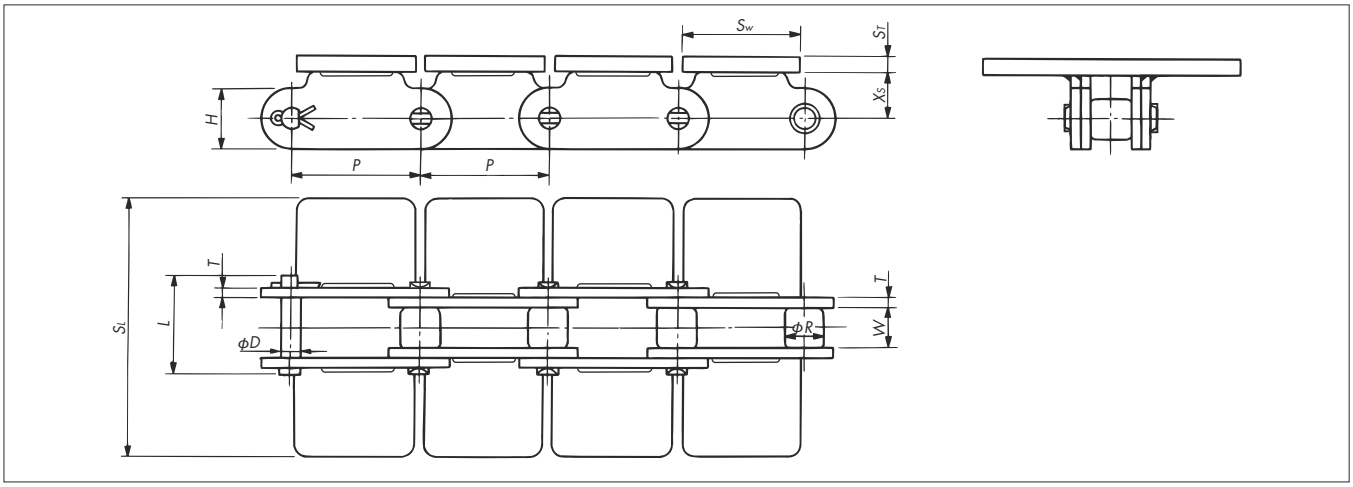

Attachment Dimensions

Size & Series	Pitch P	Width Between Inner Link Plates W	Roller Dia. R		Pin		Plate		S_T	S_L	Sw	X_S
			S Roller	R Roller	L	Dia. D	Width H	Thickness T				
RF2060-SLW	38.10	12.70	11.91	22.23	31.5	5.96	17.2	3.2	3.2	76.2	36.0	14.7
RF2080-SLW	50.80	15.88	15.88	28.58	39.9	7.94	23.0	4.0	4.5	101.6	48.0	19.1

Note: The above dimensions are nominal dimensions and may differ from actual dimensions.

Model Numbering Example

Slat (Welded)

RF2060S-SLW+120L-PKR

Size
Roller type
Attachment type
No. of links
End link

Connecting Link (JL)

RF2060-SLW-JL

Same as at left
Connecting link (JL)

RS Slat

Attachment Type: SLT

Small-pitch RS chain with a small distance between slats. Ideal for conveying small items. The small pitch also allows smooth operation.

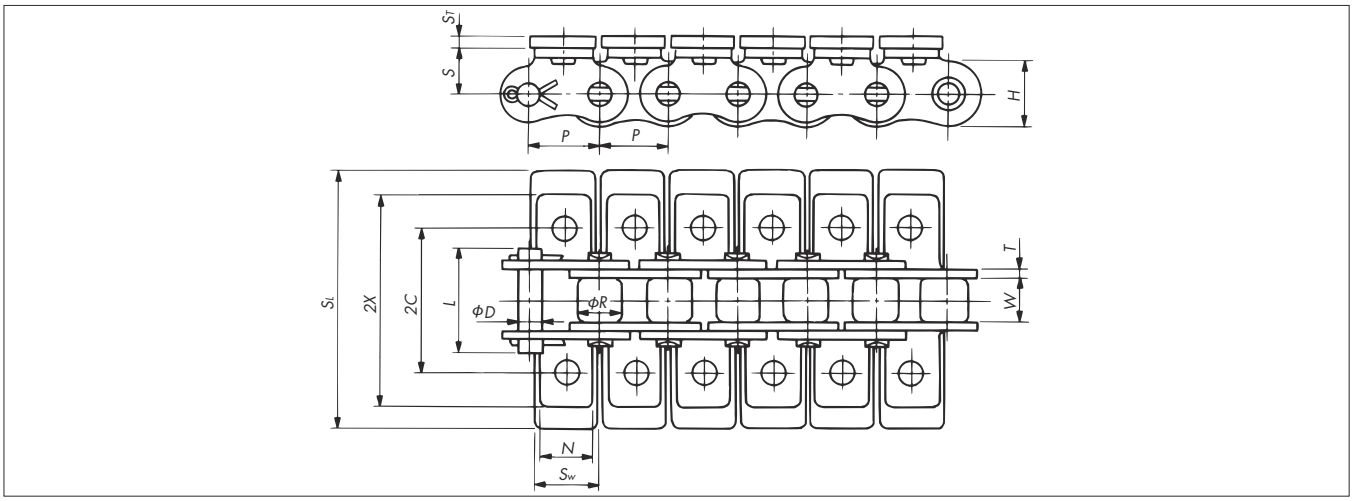

Attachment Dimensions

Size & Series	Pitch P	Width Between Inner Link Plates W	Roller Dia. R	Pin		Plate		2C	2X	N	S	S_T	S_L	Sw
				Dia. D	L	Width H	Thickness T							
RS40-SLT	12.70	7.95	7.92	3.97	19.3	12.0	1.5	25.4	35.6	9.5	8.0	3.2	50.8	12.0
RS50-SLT	15.875	9.53	10.16	5.09	23.8	15.0	2.0	31.8	46.8	12.7	10.3	3.2	63.5	15.0
RS60-SLT	19.05	12.70	11.91	5.96	30.8	18.1	2.4	38.1	56.4	15.9	11.9	4.0	76.2	18.0
RS80-SLT	25.40	15.88	15.88	7.94	38.5	24.1	3.2	50.8	73.2	19.1	15.9	4.8	101.6	24.0

Note: The above dimensions are nominal dimensions and may differ from actual dimensions.

Model Numbering Example

RS Slat

RS40-SLT+240L-PKR

Size
Attachment type
No. of links
End link

Connecting Link (JL)

RS40-SLT-JL

Same as at left
Connecting link (JL)

Film Gripper Attachment

p.156

Film Gripper Attachment

Attachment Type: KUM

Side-swivel gripper attachments ensure reliable conveyance of sheet and film material.

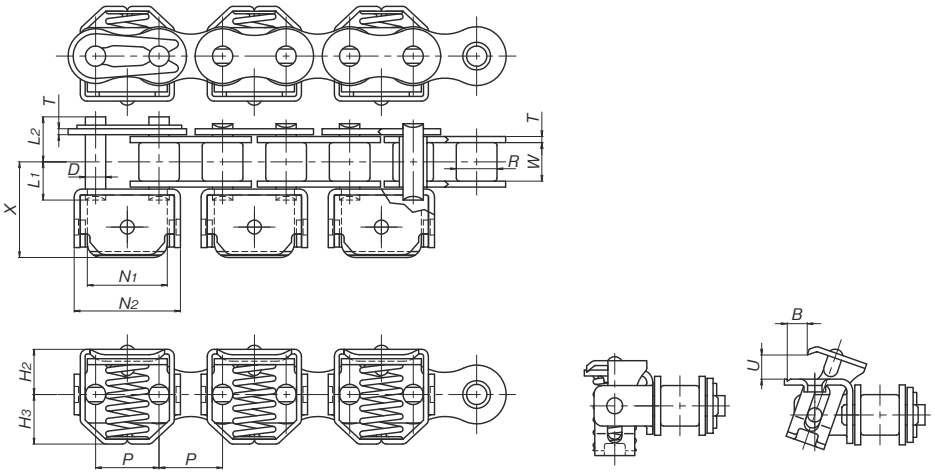

■ Attachment Dimensions

Size & Series	Pitch P	Roller Dia. R	Width Between Inner Link Plates W	Pin			Plate		X	N1	N2	H2	H3	U	B	Spring Load N
				Dia. D	L1	L2	Width H1	Thickness T								
RS08B-KUM	12.70	8.51	7.75	4.45	8.4	9.4	12.0	1.6	20.3	16.8	23.3	10.5	10.8	(4.2)	(3.7)	50
RS10B-KUM	15.875	10.16	9.65	5.08	9.55	11.25	14.7	1.5	23.9	20.0	26.6	11.3	12.4	(6.0)	(5.0)	55

Note: 1. Food-grade lubricant is applied to the chain (including KUMSS chain) at the factory.
2. The lower part of the clamps and the cams need to be regularly lubricated.
3. Stainless steel chains need to be lubricated after being washed.
4. Spring load values are for when the spring is closed.
5. The above dimensions are nominal dimensions and may differ from actual dimensions.

Model Numbering Example

Film Gripper Attachment

RS10B-KUM+120L-JR

Size
Series
KUM: Standard
KUMNP: Surface-treated
No. of links
End link
LMKUMNP: Surface-treated Lambda
KUMSS: Stainless steel

Connecting Link

RS10B-KUM-JL

Connecting link (JL)
Same as at left

◆ Specifications

KUMNP: Surface-treated chain ····· Nickel plating not only improves appearance but also gives the chain slight corrosion resistance. Therefore, it can be used in applications where there is exposure to water.

LMKUMNP: Surface-treated Lambda chain ····· Special oil-impregnated bushings deliver long life with no lubrication. The result is reduced labor maintenance, better operating environments, and greater productivity.

KUMSS: Stainless steel chain ····· All parts use austenitic stainless steel for corrosion resistance. Ideal on conveyors that are regularly washed down. The inner plate is RF type.

◆ Special Gripper Chain Sprocket Dimensions

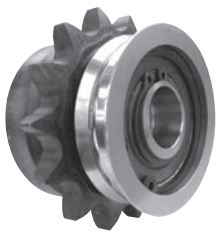

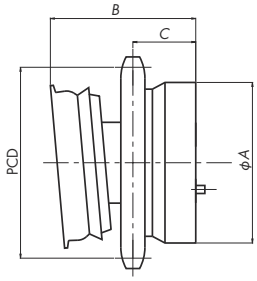

Applicable Chain Size	Model No.	No. of Teeth	PCD (mm)	φA (mm)	B (mm)	C (mm)
RS08B	RS08B-17TQ-KUM	17T	69.12	60	47	24.4
RS10B	RS10B-14TQ-KUM	14T	71.34	60	49	23.25

Integrated Attachment Chain

A Tsubaki Integrated Attachment Chain is the perfect solution to all your conveying needs.

◆ What Is an Integrated Attachment Chain?

Option 1	Tsubaki attaches jigs manufactured by customers to chains.
Option 2	Tsubaki manufactures and attaches both jigs and chains.
Option 3	Tsubaki manufactures Integrated Attachment Chains with jigs integrated into the chain.

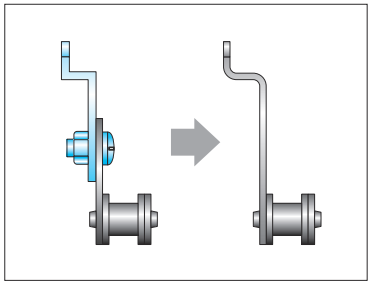

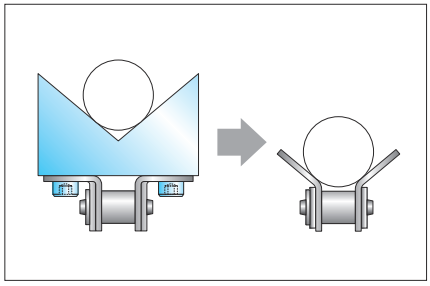

◆ Successful Applications

BEFORE

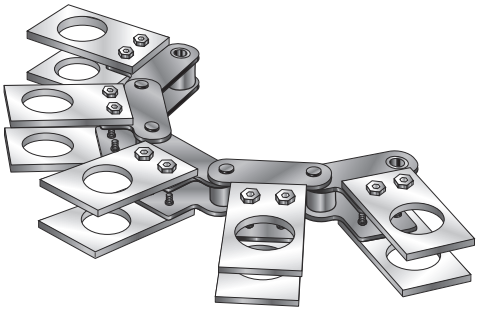

AFTER

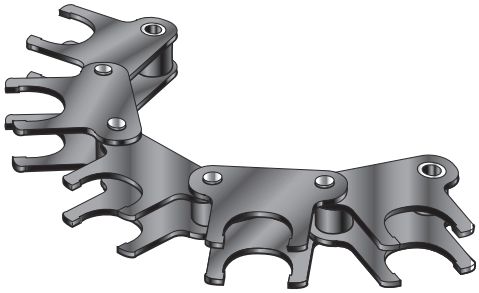

Integrating the chain and jigs reduced the time needed for plate processing, mounting, and design. Further, integrated attachment chain allowed the customer to source from one supplier, make their equipment more compact, and increase their positioning precision.

BEFORE

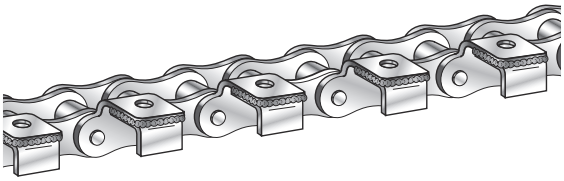

AFTER

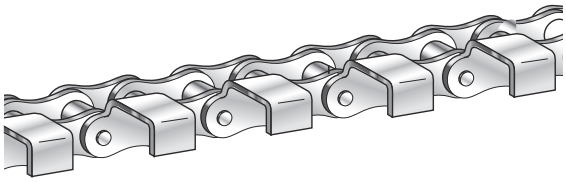

By integrating standard and special attachments with the chain, we reduced the risk of foreign matter from welding cracks getting into food. The chain could also be installed right after delivery, which meant shorter downtime for the customer.

BEFORE

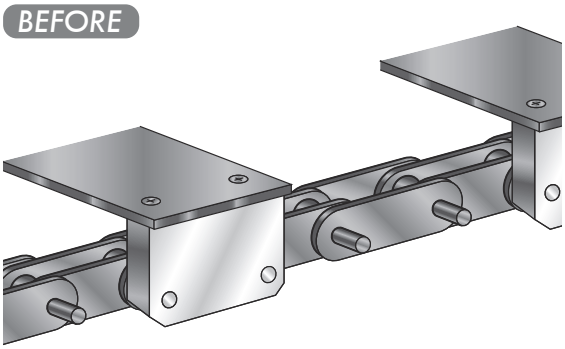

AFTER

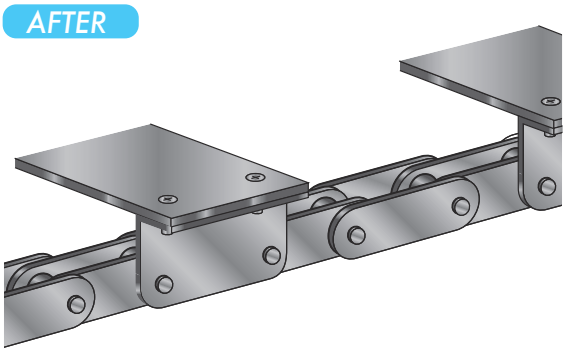

In the past, the customer attached special made-to-order blocks to extended pins, and the slats were attached with bolts. The blocks were machined and required exacting precision, which meant high procurement costs. We proposed a special attachment that would function as a block and would be integrated with the chain.

Integrated Attachment Chain

■ Integrated Attachment Chain Examples

These are examples of customized Integrated Attachment Chains.

①

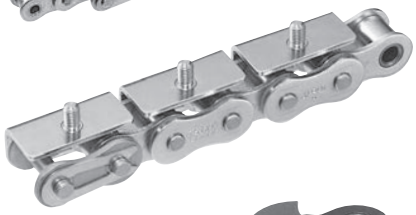
②

③

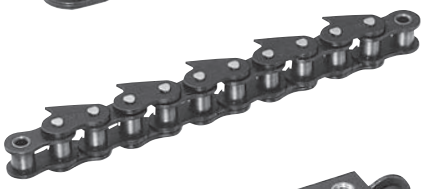
④

⑤

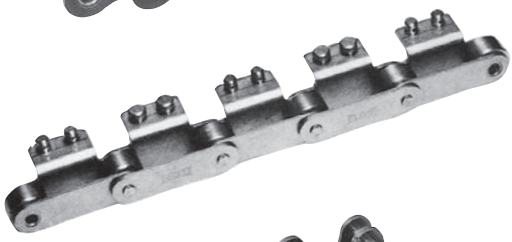
⑥

⑦

⑧

⑨

⑩

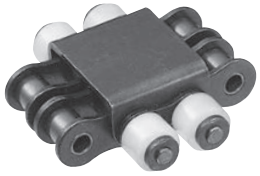
⑪

⑫

⑬

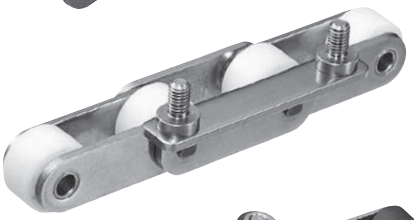
⑭

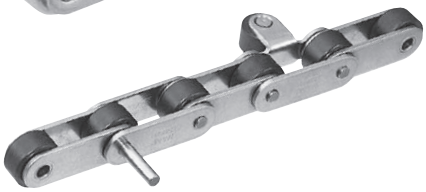
⑮

⑯

⑰

⑱

⑲

⑳

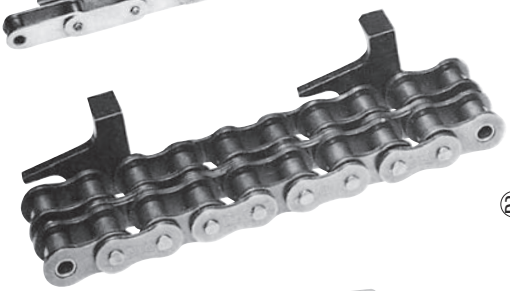

㉑

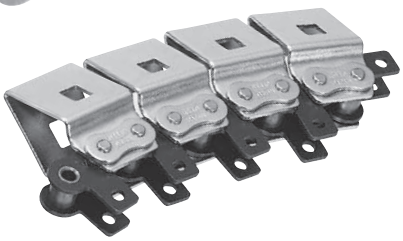

㉒

㉓

㉔

㉕

㉖

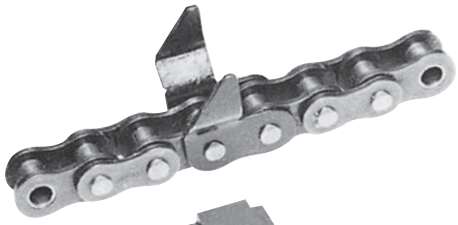

㉗

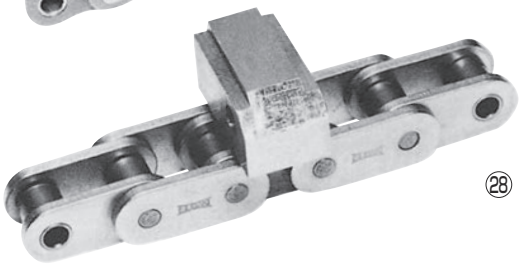

㉘

㉙

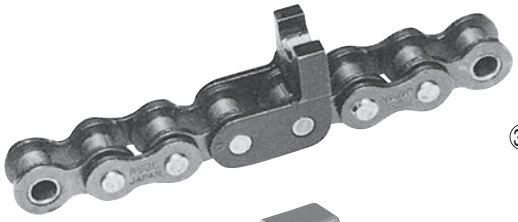

㉚

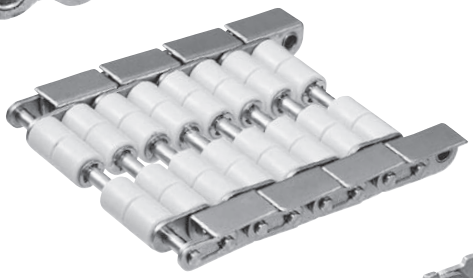

㉛

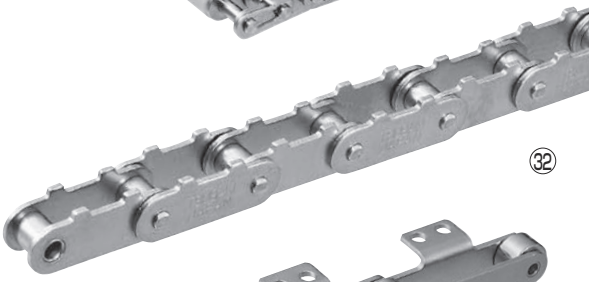

㉜

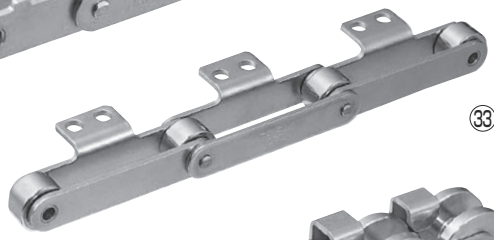

㉝

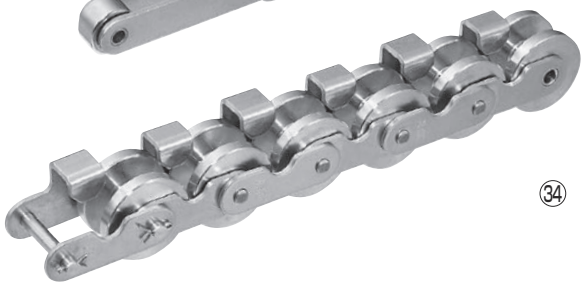

㉞

Integrated Attachment Chain

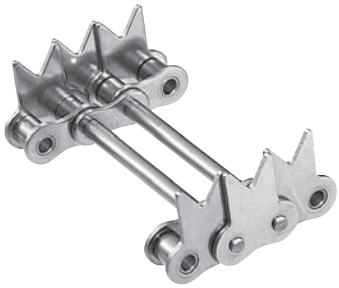

㉟

㊱

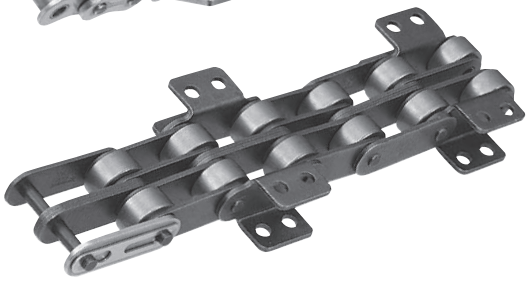

㊲

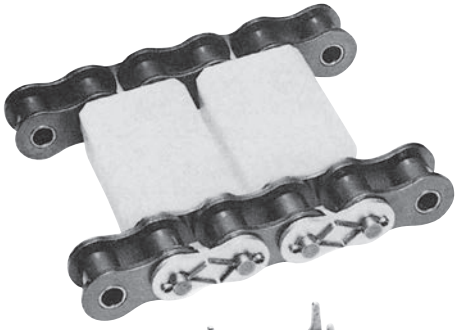

㊳

㊴

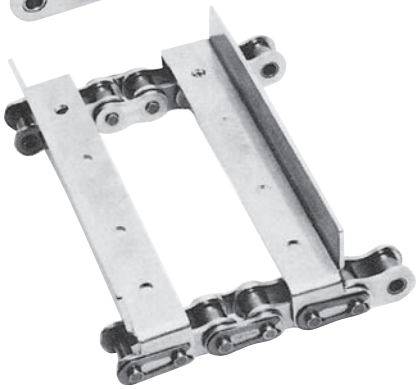

㊵

㊶

㊷

㊸

㊹

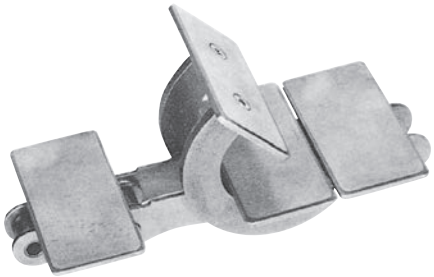

㊺

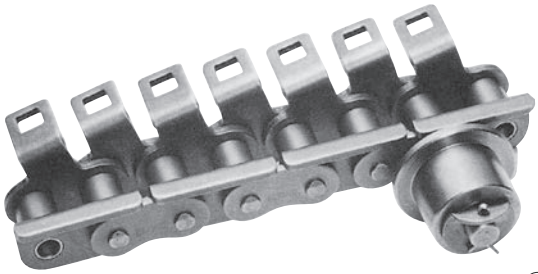

㊻

㊼

㊽

㊾

㊿

(51)

(52)

(53)

(54)

(55)

(56)

(57)

(58)

(59)

(60)

(61)

Indexing Conveyor Chain

Bearing Bush Chain

Tsubaki bearing bush chain enables chains to be used in conveyance systems considered impossible up to now. Ideal for automated, labor-saving, or high-speed applications for improved productivity.

NB Series — Series Code: NB

1. Initial elongation (0.02%) is less than bearing cage chain. Thereafter, there is no wear elongation. See graph below.
2. A wealth of custom configurations is available to meet your needs.
3. Use a lubricant appropriate for the operating temperature. Refer to Table 27 on page 170.
4. Steel needles placed between the pin and bush.

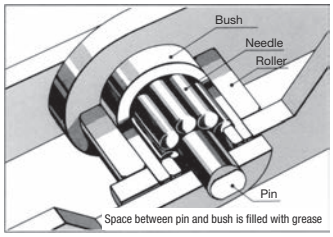

NB Series

NBH Series (High Precision) — Series Code: NBH

1. Top surfaces of attachments are ground smooth.
2. Link plates are nickel-plated except for top surfaces of attachments.
3. Space between bushes and rollers is smaller.
4. Use a lubricant appropriate for the operating temperature. Refer to Table 27 on page 170.

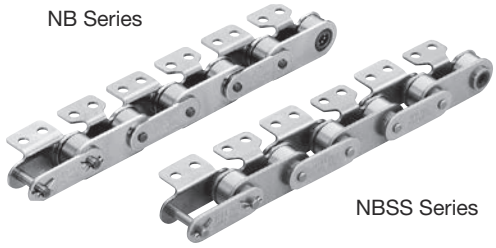

NBSS Series (Stainless Steel) — Series Code: NBSS

1. All parts except needles are stainless steel.
2. Bearings are sealed to allow use where contact with water is present.
3. Wear elongation is just 0.06% after 10^7 cycles, an extremely low value. See graph below.

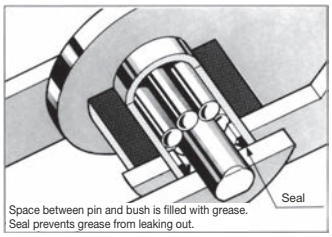

NBSS Series

Wear Elongation on Indexing Conveyor Chains

◆ Wear Elongation Diagram

• NB / NBH Chain

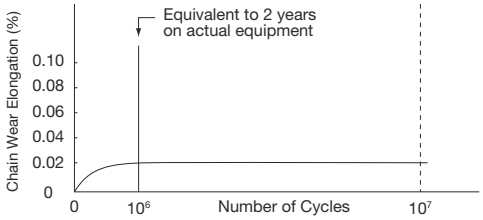

Virtually no chain wear elongation after initial elongation (0.02%) following start of operation.

• NBSS Chain

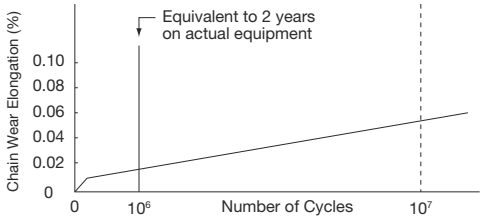

Wear elongation is just 0.06% after 10^7 cycles, an extremely low value.

[Test Conditions]

NB chain • NBH chain • NBSS chain
- Chain size and roller type: RF2040R
- Chain tension: NB / NBH chain = 0.78 kN {80 kgf}
  NBSS chain = 0.44 kN {45 kgf}
- Chain speed: 70 m/min (accelerated test)
- Sprocket teeth: 12T × 12T
- Number of links: 44
- Continuous operation

Note: Calculating Number of Cycles from Actual Conditions
- Chain: RF2040R
- Number of links: 232 links = 5,892.8 mm Feed length per takt time = 101.6 mm/1.1 sec
- Sprocket teeth: 12T × 12T
- Assuming 4 flexing cycles per chain revolution:

Therefore, the number of cycles in 2 years (8 hrs/day x 300 days/year) under the above conditions yields:

$$\frac{5892.8\ \text{mm}}{101.6\ \text{mm}} \times 1.1\ \text{seconds} = 63.8\ \text{seconds/revolution}$$

$$\frac{60\ \text{sec}}{63.8\ \text{sec}} \times 60\ \text{min} \times 8\ \text{hrs} \times 300\ \text{days} \times 2\ \text{years} \times 4\ \text{cycles} = 1.08 \times 10^6\ \text{cycles}$$

Application Examples

Process	Material/Object Conveyed
Assembly	Condensers, cassettes, batteries, stoves, automotive parts, limit switches, watches, solenoid valves
Inspection	ICs, cables, automotive parts
Processing	Medical products, cables, building material boards
Packaging	Brushes, batteries, confections
Filling	Detergent
Printing	Beverage containers, drinking glasses, printed materials

Bearing Cage Chain

NC Series

Series Code: NC

1. Virtually no chain wear elongation after initial elongation (0.03%) following start of operation (see graph below).
2. More affordable than NB bearing bush chain.
3. Uses a needle bearing cage (of engineering plastic) between the pin and bush.

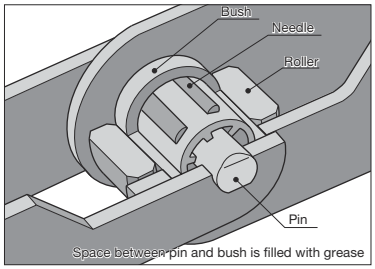

◆ Wear Elongation Diagram

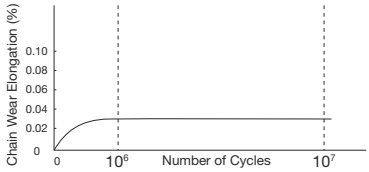

[Test Conditions]

- Chain model: RF2040R-NC
- Chain tension: 0.44 kN {45 kgf}
- Chain speed: 70 m/min (accelerated test)
- Sprocket teeth: 12T × 12T
- Number of links: 44
- Continuous operation

Mini Tact Chain

Custom designs and manufacturing are available to match your application needs. Contact a Tsubaki representative for more information.

1. Virtually no chain wear elongation after initial elongation (0.01%) following start of operation.
2. Chain pitch accuracy is ±0.05 mm. Plus, small pitch makes this chain ideal for accurate positioning of small work.
3. Aluminum inner blocks mean lighter weight, enabling a compact design that includes drive components.
4. Uses steel needle bearings; aluminum inner blocks and steel base chain.
5. Special sprockets are required.

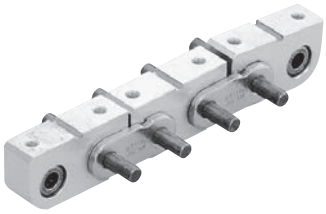

Indexing Table Chain

1. Virtually no chain wear elongation after initial elongation (0.01%) following start of operation.
2. Chain pitch accuracy is ±0.05 mm, enabling high positioning accuracy.
3. Uses needle bearings; outboard rollers and guide rollers use steel bearings; steel base chain (links are blackened).
4. Special sprockets are required.
5. Two types of outboard rollers are available: single (S) and double (D).
   - Double outboard rollers (D type) draw the guide rail up to the sides of the sprockets, enabling smooth conveyance. This type is for general applications.
   - Single outboard rollers (S type) are used as replacements when this type is currently in use.

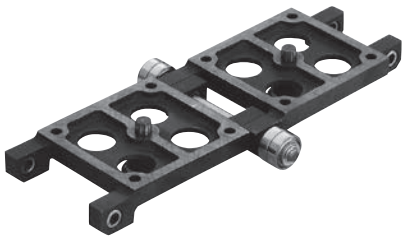

Model Numbering Example

BC050S-45+10L

- Chain type
- Chain pitch
- Outboard roller type
  - S : Single
  - D : Double
- Width between link plates
- No. of links

Bearing Bush Chain

Chain No. p.17-18 | p.122 | p.15 | p.141-

Base Chain

NB/NBH Chain

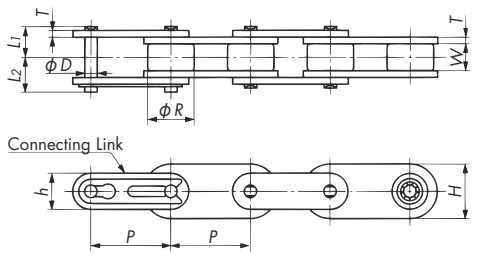

NBSS Chain

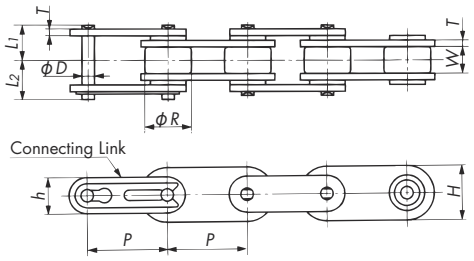

Attachments

NB/NBH Chain

A2 Attachment

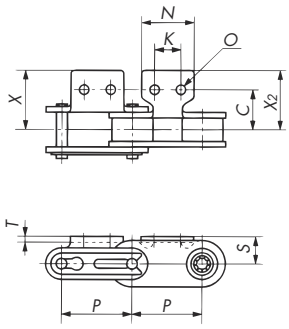

K2 Attachment

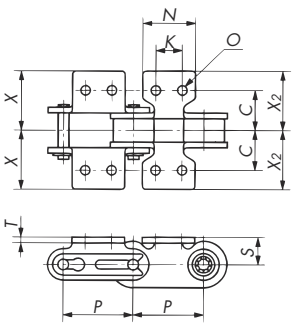

NBSS Chain

A2 Attachment

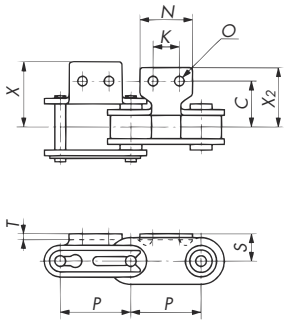

K2 Attachment

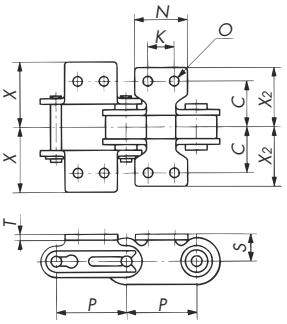

Base Chain/Attachment Dimensions

Size, Roller Type, Series		Pitch	Roller Dia.	Width Between Inner Link Plates	Plate			Pin			Max. Allowable Load	Approx. Mass
NB	NBH	P	R	W	Thickness T	Width h	Width H	Dia. D	L_1	L_2	kN {kgf}	kg/m
RF2040R-NB	RF2040R-NBH	25.40	15.88	7.95	1.5	12.0	17.5	3.97	8.25	9.95	0.78{ 80}	0.99
RF2050R-NB	RF2050R-NBH	31.75	19.05	9.53	2.0	15.0	21.0	4.97	10.30	12.00	1.27{130}	1.72
RF2060R-NB	RF2060R-NBH	38.10	22.23	12.70	3.2	17.2	26.0	5.96	14.55	16.55	1.77{180}	2.57
RF2080R-NB	RF2080R-NBH	50.80	28.58	15.88	4.0	23.0	35.0	7.94	18.30	20.90	2.94{300}	3.88

Size, Roller Type, Series		Attachment							Additional Weight per Attachment kg	
NB	NBH	S	C	$X \cdot X_2$	N	K	T	O	A2	K2
RF2040R-NB	RF2040R-NBH	9.1(8.9)	12.70	19.3	19.1	9.5	1.5	3.6	0.003	0.006
RF2050R-NB	RF2050R-NBH	11.1(10.9)	15.90	24.2	23.8	11.9	2.0	5.2	0.006	0.012
RF2060R-NB	RF2060R-NBH	14.7(14.4)	21.45	31.5	28.6	14.3	3.2	5.2	0.017	0.034
RF2080R-NB	RF2080R-NBH	19.1(18.8)	27.80	40.7	38.1	19.1	4.0	6.8	0.032	0.064

Size, Roller Type, Series	Pitch	Roller Dia.	Width Between Inner Link Plates	Plate			Pin			Max. Allowable Load	Approx. Mass
NBSS	P	R	W	Thickness T	Width h	Width H	Dia. D	L_1	L_2	kN {kgf}	kg/m
RF2040R-NB-SS	25.40	15.88	7.95	1.5	12.0	17.5	3.97	10.45	12.15	0.44 {45}	1.06
RF2050R-NB-SS	31.75	19.05	9.53	2.0	15.0	21.0	4.97	12.60	14.30	0.69 {70}	1.82
RF2060R-NB-SS	38.10	22.23	12.70	3.2	17.2	26.0	5.96	16.80	18.70	1.03{105}	2.68
RF2080R-NB-SS	50.80	28.58	15.88	4.0	23.0	35.0	7.94	21.50	24.40	1.77{180}	4.07

Size, Roller Type, Series	Attachment								Additional Weight per Attachment kg	
NBSS	S	C	X	X_2	N	K	T	O	A2	K2
RF2040R-NB-SS	9.1	14.9	21.5	19.3	19.1	9.5	1.5	3.6	0.003	0.006
RF2050R-NB-SS	11.1	18.2	26.5	24.2	23.8	11.9	2.0	5.2	0.006	0.012
RF2060R-NB-SS	14.7	23.7	33.95	31.5	28.6	14.3	3.2	5.2	0.017	0.034
RF2080R-NB-SS	19.1	31.0	43.9	40.7	38.1	19.1	4.0	6.8	0.032	0.064

Note: 1. Dimension *S* differs for NBH chain, and is given inside parentheses.
2. The above dimensions are nominal dimensions and may differ from actual dimensions.

Bearing Cage Chain

Chain No. p.17-18 | p.122 | p.15 | p.141-

Base Chain

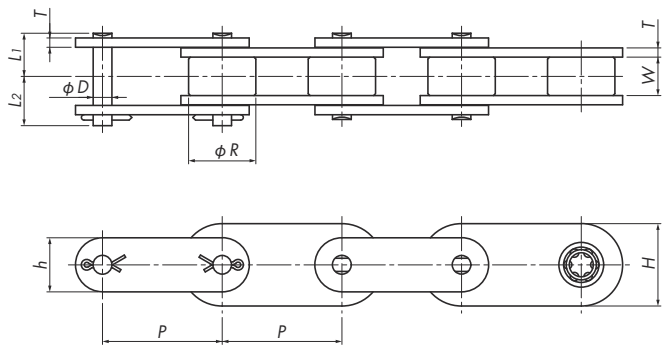

Attachments

A2 Attachment

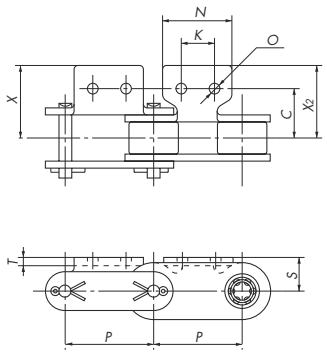

K2 Attachment

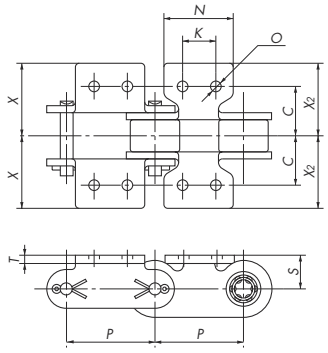

Base Chain Dimensions

Size, Roller Type, Series	Pitch P	Roller Dia. R	Width Between Inner Link Plates W	Plate			Pin			Max. Allowable Load kN {kgf}	Approx. Mass kg/m
				Thickness T	Width h	Width H	Dia. D	L_1	L_2		
RF2040R-NC	25.40	15.88	7.95	1.5	12.0	17.5	3.97	8.25	9.95	0.44{ 45}	0.99
RF2050R-NC	31.75	19.05	9.53	2.0	15.0	21.0	5.09	10.30	12.00	0.69{ 70}	1.72
RF2060R-NC	38.10	22.23	12.70	3.2	17.2	26.0	5.96	14.55	16.55	1.03{105}	2.57
RF2080R-NC	50.80	28.58	15.88	4.0	23.0	35.0	7.94	18.30	20.90	1.77{180}	3.88

Attachment Dimensions

Size, Roller Type, Series	Attachment							Additional Weight per Attachment kg	
	S	C	$X \cdot X_2$	N	K	T	O	A2	K2
RF2040R-NC	9.1	12.70	19.3	19.1	9.5	1.5	3.6	0.003	0.006
RF2050R-NC	11.1	15.90	24.2	23.8	11.9	2.0	5.2	0.006	0.012
RF2060R-NC	14.7	21.45	31.5	28.6	14.3	3.2	5.2	0.017	0.034
RF2080R-NC	19.1	27.80	40.7	38.1	19.1	4.0	6.8	0.032	0.064

Note: The above dimensions are nominal dimensions and may differ from actual dimensions.

Bearing Bush Chain, Bearing Cage Chain

■ Sprockets

Double pitch sprockets for R rollers can be used.

■ Max. Allowable Loads for Bearing Bush Chain (NB, NBH, NBSS) and Bearing Cage Chain (NC)

(Unit: kN {kgf} per attachment or per roller)

Size & Roller Type	Allowable A2 Attachment Load		Allowable Roller Load	
	Outer Plate	Inner Plate	NC/NB/NBH	NBSS
RF2040R	0.12{12}	0.03{ 3}	0.15{15}	0.05{ 5}
RF2050R	0.18{18}	0.05{ 5}	0.20{20}	0.06{ 6}
RF2060R	0.47{48}	0.13{13}	0.29{30}	0.09{ 9}
RF2080R	0.72{73}	0.21{21}	0.54{55}	0.15{15}

Note: Values for allowable roller load are for lubricated conditions.

■ Precautions for Use

1. Chain speed must be 30 m/minute or less.
2. Operating temperature range: Bearing Cage Chain: –10°C to 60°C
   Bearing Bush Chain (NB/NBH): –10°C to 150°C
   Bearing Bush Chain (NBSS): –10°C to 60°C
3. Chain must be handled carefully when the pins have been removed, for example, while connecting the chain, as the needles in the bearings (or in the needle cage) may fall out.

■ Lubrication

The space between the pin and bush is filled with grease, but the sprocket teeth and the gap between the bush and roller should be lubricated with ISO VG100 to VG150 (SAE30 to SAE40) machine oil.

Bearing Bush Chain Custom Configurations

Custom Attachments			Custom Pitches		Custom Extended Pins
Triangle Attachment	Press Nut	Stay Pin	RSN (Single Pitch Bushed Type)	Metric Pitch	Threaded Extended Pin
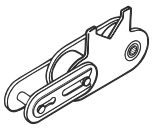	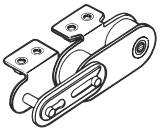	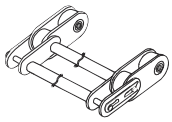	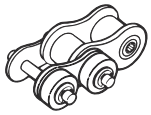	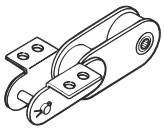	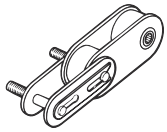
• Profile of attachment is matched to the shape of the conveyed objects, which are cradled by the attachment as they are conveyed.	• Nuts are added on the attachment. • Enables jigs or tools to be installed easily. • Standard type only.	• Pins are extended to form parallel strands. Allows wider objects to be conveyed. • Standard type only.	• Chain pitch is the same as RS roller chain. • Generally interchangeable with RS roller chain. However, certain sizes may not fit. Please inquire for details.	• Standard type chain having metric pitch (in mm). • Provides chain pitches matched to indexing distances. Note: Special sprockets are required.	• Extended pins are threaded to enable tools, jigs, etc., to be attached.

Outboard Rollers	Guide Rollers	Multiple Strands	Dust-Proof
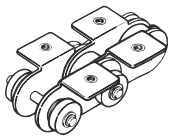	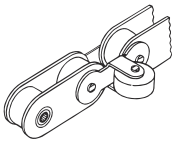	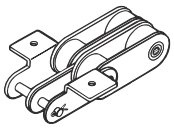	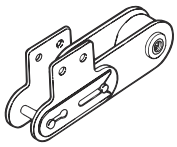
• Outboard rollers are mounted on one or both sides. • Installing outboard rollers stabilizes chain travel. Also, building bearings into the outboard rollers enables even higher precision conveyance.	• Installing guide rollers enables side surface guiding and horizontal conveyance. • Please inquire regarding use of the stainless steel type in environments where chain would be exposed to water.	• Can be fabricated in multiple strands, for example, 2 or 3 strands. • For applications where the maximum allowable load of a single strand is inadequate. • Standard type only. Note: Special sprockets are required.	• A seal is incorporated into the bearing components. • Prevents bearings from being contaminated by foreign substances.

Mini Tact Chain

■ Operating Temperature Range

10°C to 40°C

■ Chain Speed

30 m/minute or less (recommended range)

The chains below come from Tsubaki's proven portfolio of stock designs. Tsubaki can design and manufacture other chains to match your application and requirements. Contact a Tsubaki representative when considering Mini Tact Chain.

Model: BCM12.5-9 (12.5 mm pitch)

- Approximate Chain Mass : 19.4 g/2 links
- Maximum Allowable Load : 0.3 kN {30 kgf}

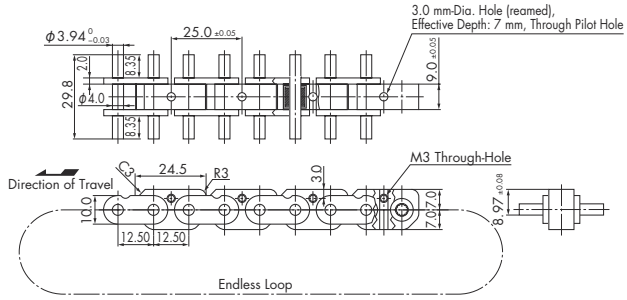

Model: BCM15-9 (15 mm pitch)

- Approximate Chain Mass : 25 g/2 links
- Maximum Allowable Load : 0.3 kN {30 kgf}

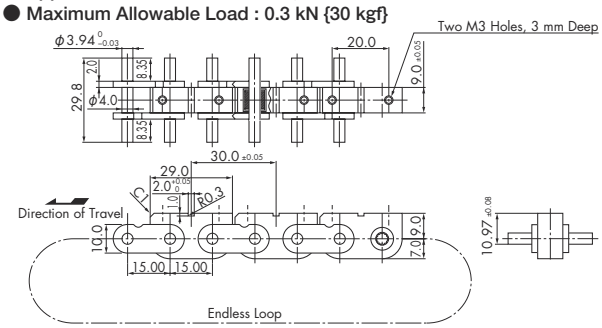

■ Sprockets (for BCM Chain)

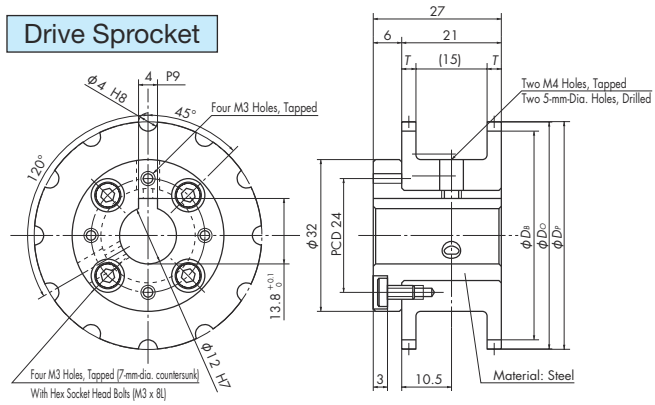

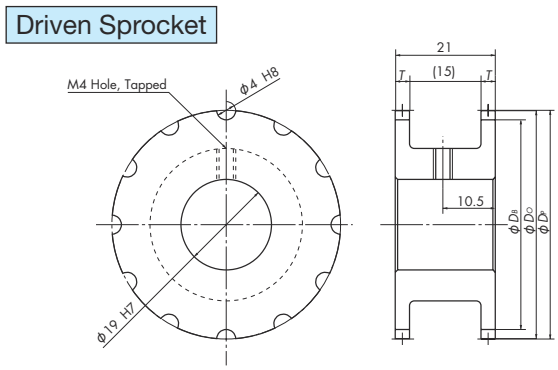

Note: Drawings show 12-tooth sprockets, but 16-tooth sprockets are also available. All dimensions are the same as above.

Applicable Chain	Sprocket								
	Sprocket No.	Type	No. of Teeth	Pitch Circle Dia. D_P	Outside Dia. D_O	Root Circle Dia. D_B	Tooth Width T	Approx. Mass kg	Material
BCM12.5-9	BCM12.5-9 D 12T	Drive	12T	48.296	48	44.296	3	0.090	Plastic + steel
	BCM12.5-9 A 12T	Driven		48.296	48	44.296	3	0.025	Plastic
	BCM12.5-9 D 16T	Drive	16T	64.073	63.5	60.073	3	0.130	Plastic + steel
	BCM12.5-9 A 16T	Driven		64.073	63.5	60.073	3	0.062	Plastic
BCM15-9	BCM15-9 D 12T	Drive	12T	57.956	57.5	53.956	3	0.110	Plastic + steel
	BCM15-9 A 12T	Driven		57.956	57.5	53.956	3	0.050	Plastic
	BCM15-9 D 16T	Drive	16T	76.888	76.5	72.888	3	0.170	Plastic + steel
	BCM15-9 A 16T	Driven		76.888	76.5	72.888	3	0.100	Plastic

Indexing Table Chain

1. Link plate material: Carbon steel
2. Link surface treatment: Blackened
3. Outboard rollers: Two types of outboard rollers are available: single (S) and double (D).
4. Double outboard rollers draw the guide rail up to the sides of the sprockets, enabling smooth conveyance. This type is for general applications.
5. Single outboard rollers are used as replacements when this type is currently in use.

■ Chain Outside Dimensions (Single Roller)

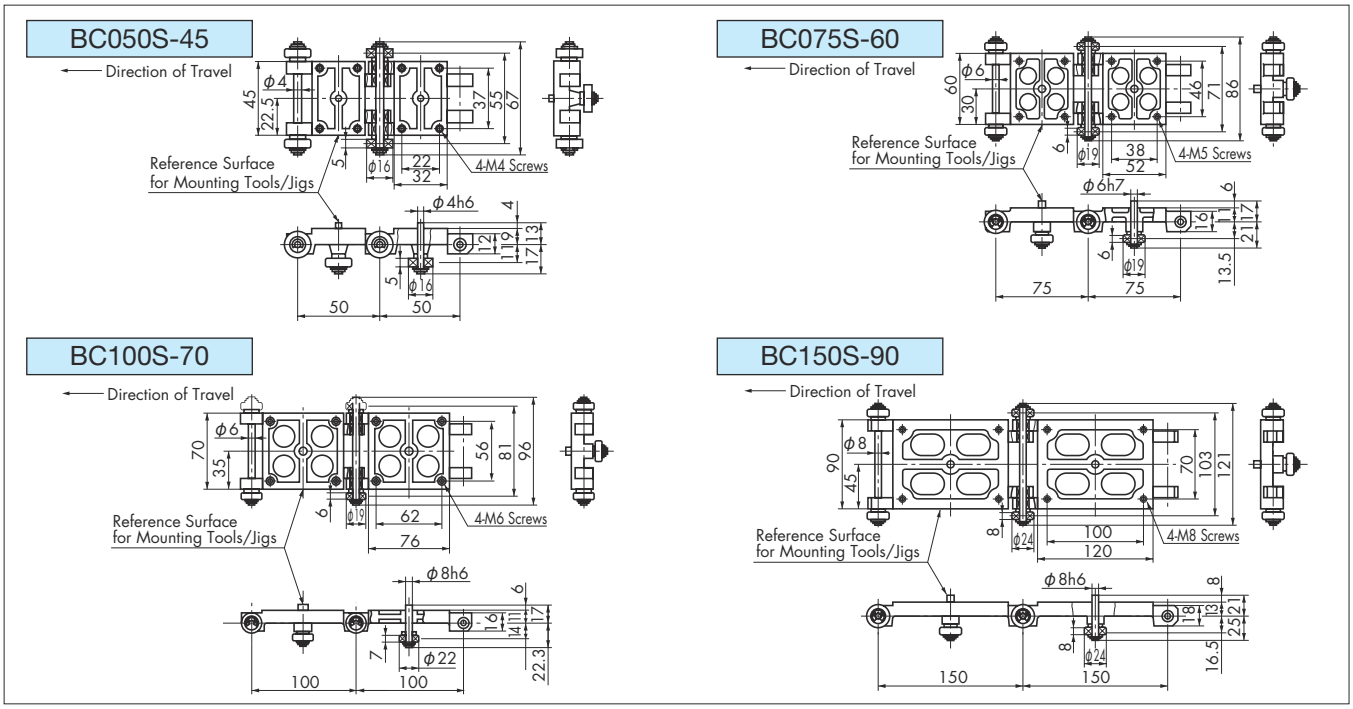

■ Chain Outside Dimensions (Double Roller)

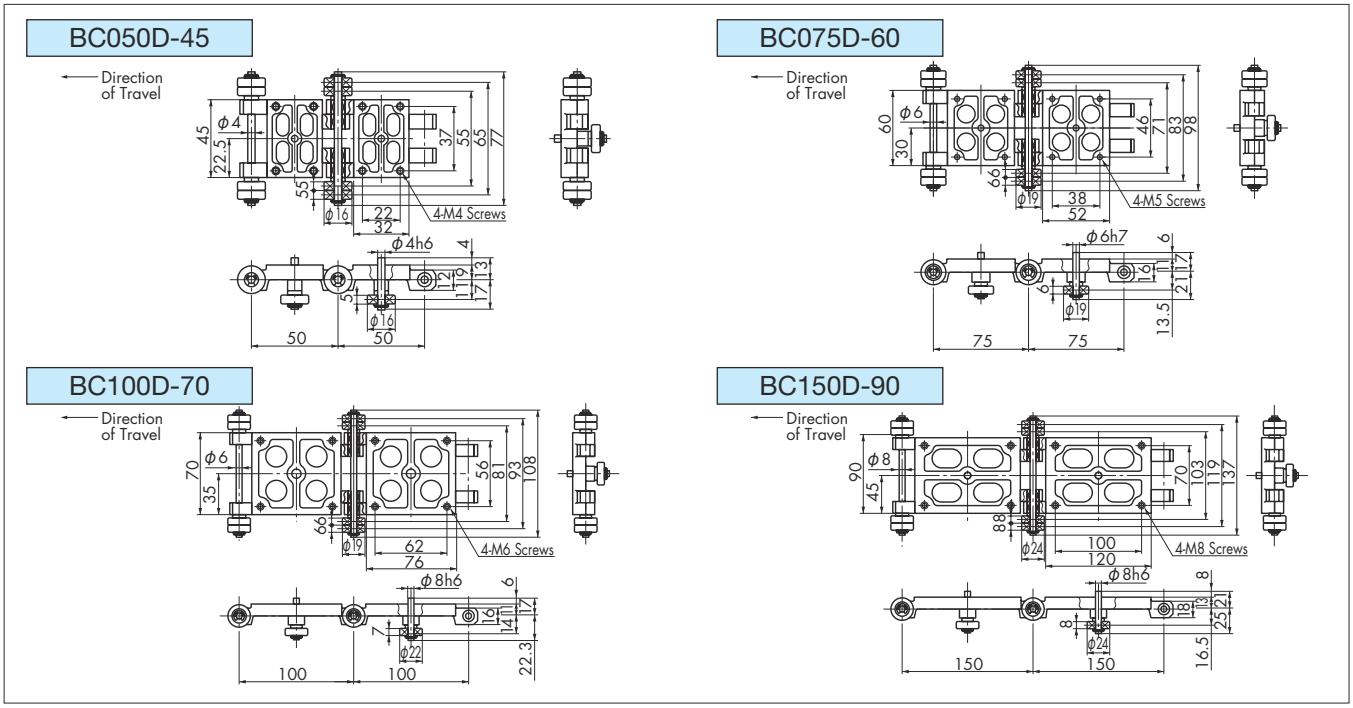

Chain Number		Pitch mm	Mass/Link kg	Max. Allowable Load per Link kN/link {kg/link}	Max. Allowable Load kN {kgf}	Allowable Speed mm/s
Single	Double					
BC050S-45	BC050D-45	50	0.14	0.05 { 5}	0.49 { 50}	500
BC075S-60	BC075D-60	75	0.32	0.08 { 8}	0.69 { 70}	500
BC100S-70	BC100D-70	100	0.44	0.08 { 8}	0.69 { 70}	500
BC150S-90	BC150D-90	150	1.16	0.12 {12}	1.27 {130}	500

Note: Allowable speed is index pitch (mm) ÷ index time (seconds)

■ Operating Temperature Range

–10°C to 60°C

■ Sprockets (for BC Chain)

- **Specifications**
  - Tooth profile : Special round tooth profile
  - Material : Carbon steel for machine structural use
  - Surface treatment : Blackened
- **Available Types**
  - Sizes : 50, 75, 100, and 150 mm widths
  - Number of teeth : 8T or 12T

  Note: Same sprockets are used for Single Roller and Double Roller types.

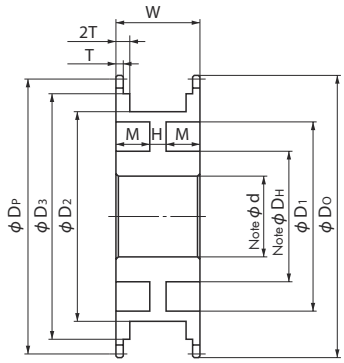

Applicable Chain		Sprocket											Mass kg	Moment of Inertia I (kg·m²) {GD²(kgf·m²)}
		Sprocket No.	No. of Teeth	Dimensions										
Single	Double			D_P	D_O	D_1	D_2	D_3	W	T	H	M		
BC050S-45	BC050D-45	BC050-45-08T	8T	130.66	131	64	80	110	60	5	10	25	2.4	0.005 {0.02}
		BC050-45-12T	12T	193.19	194	130	146	170	60	5	10	25	4.7	0.02 {0.08}
BC075S-60	BC075D-60	BC075-60-08T	8T	195.98	196	116	134	170	77	6	11	33	6.5	0.025 {0.1 }
		BC075-60-12T	12T	289.78	290	214	232	265	77	6	11	33	12.6	0.13 {0.5 }
BC100S-70	BC100D-70	BC100-70-08T	8T	261.31	262	172	192	230	87	6	13	37	11	0.085 {0.34}
		BC100-70-12T	12T	386.37	387	305	325	360	87	6	13	37	21	0.4 {1.6 }
BC150S-90	BC150D-90	BC150-90-08T	8T	391.97	392	280	305	338	111	8	15	48	28	0.52 {2.1 }
		BC150-90-12T	12T	579.56	580	480	505	536	111	8	15	48	52	2.4 {9.6 }

Note: The shape of the bore and hub and their sizes (bore diameter *d*, hub diameter *DH*) are determined by conveyor layout and other factors. Be sure to indicate these.

Model Numbering Example

BC050-45+08T

- Chain type
- Chain pitch
- Width between link plates
- No. of teeth

Free Flow Chain

What Is a Free Flow Chain?

A free flow conveyor is one where the chain can continue to run while conveyed goods can be stopped at any position on the conveyor using stoppers while work takes place. Once the work is finished the stoppers can be removed and the conveyor can continue to convey. Chains used for this type of conveyor are called Free Flow Chains.

Double Plus Chain

High Speed and Low Noise

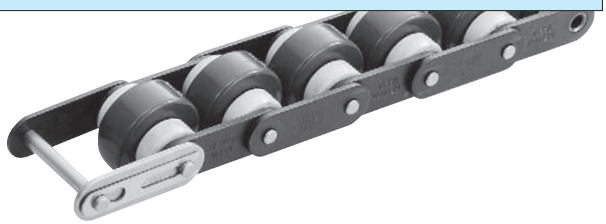

2.5x Speed A unique construction combining the use of small and large rollers allows high-speed transfer at 2.5 times the speed of the chain.

Low Noise The lower chain speed allows accumulation (temporarily stopping conveyed objects) with low noise.

Double Plus Chain with Snap Cover

Prevents Small Parts from Falling into Frame (High speed and low noise)

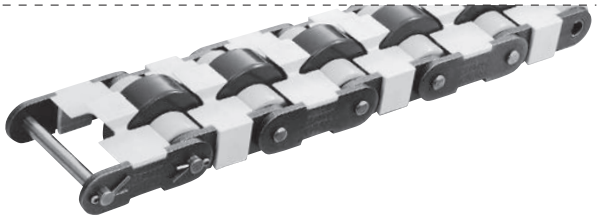

Safe The snap cover prevents small parts from falling into the frame.

Applications

This chain is widely used for assembly and inspection lines in a variety of fields, such as the automobile and electronics industries.

Center Roller Chain

Same Speed and Stable Transfer

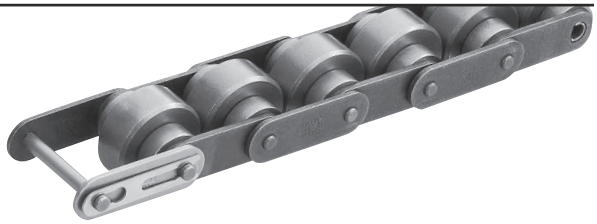

Same Speed The speed of the chain and conveyed objects is the same ratio of 1:1.

Stable Conveyance This chain allows stable conveyance, as its center of gravity is lower than that of Top Roller Chain and conveyed items are received on rollers on both sides.

Outboard Roller Chain

Smallest Dimension in Vertical Direction

Outboard rollers allow for a more compact conveyor. With its many outboard rollers, this chain is suitable for conveyors on which small objects are placed directly on the conveyor.

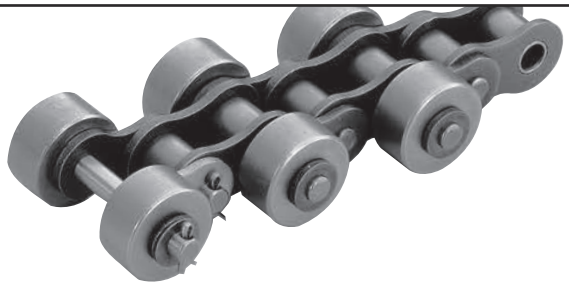

Applications

This chain is used for low-speed conveyance of objects of various sizes in a wide range of fields.

- Double Pitch Chain with Outboard Rollers
- RS Chain with Outboard Rollers
- Poly Steel Chain with Outboard Rollers

Top Roller Chain

Smaller Chain Width in Horizontal Direction

The width of the chain is smaller than that of other types of Free Flow Chain. With top rollers supported by plates on both sides, this chain is suitable for use with rugged free-flow conveyors.

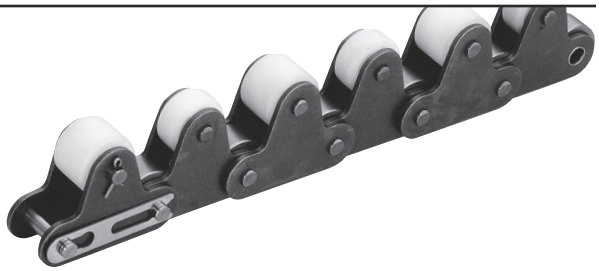

Applications

This chain is used for low-speed conveyance of heavy objects and is widely adopted in the automobile industry.

- Double Pitch Chain with Top Rollers
- RS Chain with Top Rollers

*Base Chain
Refers to the part of the chain, excluding the large rollers, small rollers, outboard rollers, and top rollers for the sake of convenience.

Base Chain*

Double Plus Chain

Feature	Specs	Series
Standard	Steel	(None)
Anti-corrosive	Hard chrome plating	HCP
	Stainless steel	SS
Lube free	Lambda	LMC

Double Plus Chain with Snap Cover

Feature	Specs	Series
Standard	Steel	SC
Anti-corrosive	Hard chrome plating	HCPSC
	Stainless steel	SSSC
Lube free	Lambda	LMCSC

Rollers

Engineering Plastic Roller

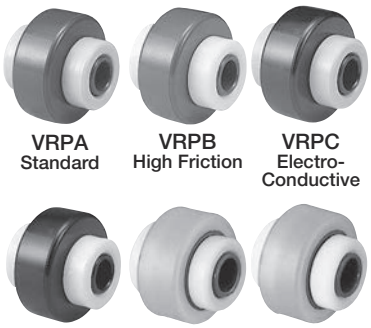

VRPA Standard
VRPB High Friction
VRPC Electro-Conductive
VRPD Electro-Conductive High Friction
VRPUA Urethane Lining
VRPUB

Steel Roller

VR
High Load

Related Components

Special Sprocket for Double Plus Chain

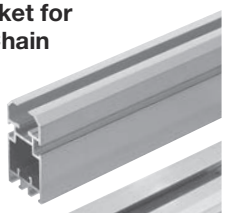

Aluminum Frame

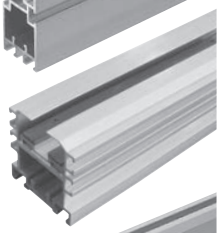

Aluminum Frame with Steel Rail

Aluminum Frame for Drive and Driven Sections

Pallet Guide Rail and Plastic Rail

Return Guide

Bracket

Frame Joint

Standard Steel — **Steel Roller type: CR**

Note: Center Roller Chain with Snap Cover is also available. Series code: SC

Feature	Specs	Series	Outboard Roller
Standard	Steel	(None)	Engineering Plastic Electro-Conductive Engineering Plastic Steel Lambda
Lube free	Lambda	LMC	Engineering Plastic Steel Lambda
Anti-corrosive	Stainless steel	SS	Engineering Plastic Stainless Steel KV
Lightweight, lube free	Poly Steel	PC	Engineering Plastic

Feature	Specs	Series	Top Roller
Standard	Steel	(None)	Engineering Plastic Steel Lambda
Lube free	Lambda	LMC	Engineering Plastic Steel Lambda
Anti-corrosive	Stainless steel	SS	Engineering Plastic Stainless Steel KV

Outboard Roller and Top Roller Specifications

Roller Category		Roller Type: Outboard	Roller Type: Top	Material	Operating Temp. Range	Description
Engineering plastic roller	Engineering plastic	SRP	TRP	Polyacetal (white)	–20°C to 80°C	Lightweight, low friction
	Electro-conductive engineering plastic	SRPE	TRPE	Special engineering plastic (black)	–20°C to 80°C	Volume resistivity $10^6\Omega\cdot$cm (For RF2060 or smaller)
	KV	SRPKV	TRPKV	Super engineering plastic (black)	–20°C to 180°C	Offers superb heat, chemical, and flame resistance, and conforms to the Japan Food Sanitation Act. In general, base chain is SS. (For RF2060 or smaller)
Steel roller	Steel	SR	TR	Hardened steel	–10°C to 150°C	Lubrication required
	Stainless steel	SR	SR	18-8 stainless steel	–20°C to 400°C	Lubrication required
	Lambda	SRLM	TRLM	Hardened steel	–10°C to 150°C	Can be used lube-free. Also available with brakes. (For RS60/RF2060 or smaller)

Double Plus Chain

Construction

■ Standard/HCP/SS Chain

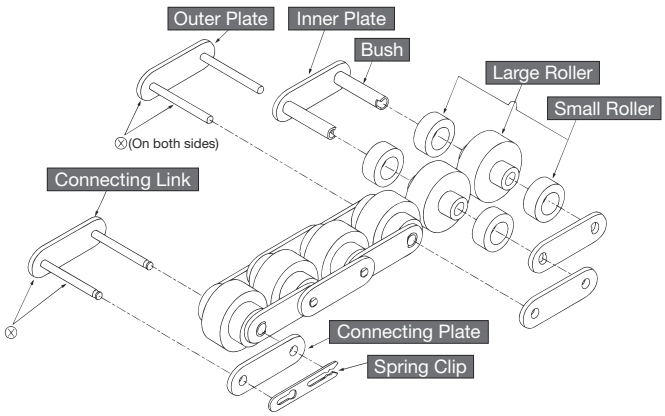

Parts marked with ⊗ are press fit.
Other parts are slip fit.

■ Lambda (Lube Free) Chain

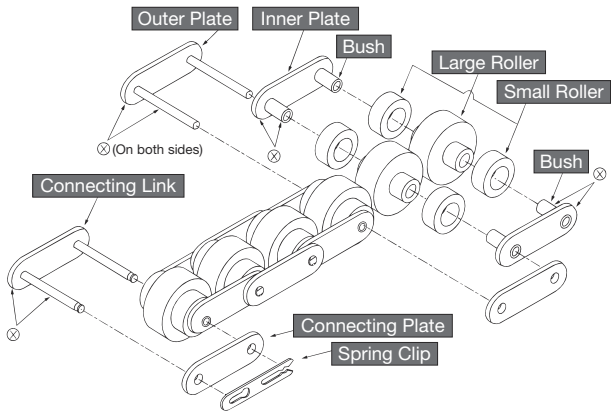

Parts marked with ⊗ are press fit.
Other parts are slip fit.

- Uses a special oil-impregnated bush.
- The bush is press-fitted into the inner plate.
- The pin is treated with a special nickel plating.
- The inner and outer plates are treated with a black oxide finish.

■ Double Plus Chain with Snap Cover

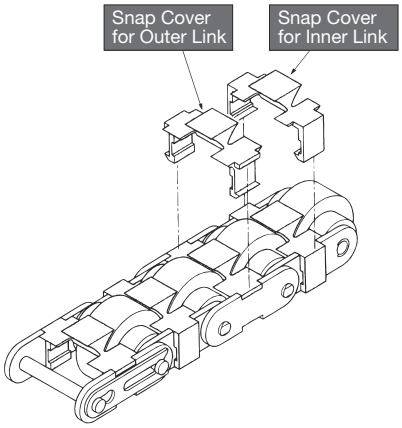

Double Plus Chain with Snap Cover differs from the Double Plus Chain shown above only in terms of the shape of the plate on which the snap cover is installed. The snap cover is detachable. Double Plus Chain with Snap Cover is available in hard chrome plating, stainless steel, and Lambda types, as well as the standard type.

■ Chain with Urethane Lined Rollers

Applicable chain size: RF2030

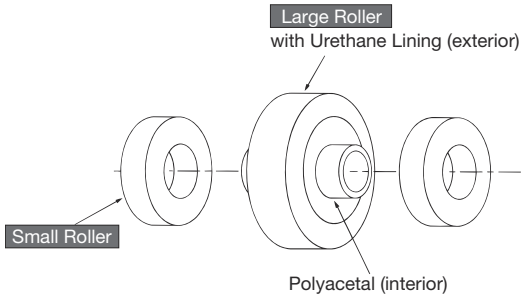

Differs from Double Plus Chain only in the large roller.

Base Chain and Roller Combinations

The proper combination of base chain (4 types) and roller (7 types) allows the optimum selection for your intended purpose (The mark ○ in the table below shows an allowable combination). The same combination is also allowed for Double Plus Chain with Snap Cover.

Base Chain Series, Material, Application \ Roller Series Roller Type	Engineering Plastic Roller				Urethane Lining*1		Steel Roller
	VRPA Standard	VRPB High Friction	VRPC Electro-Conductive	VRPD Electro-Conductive, High Friction	VRPUA Standard	VRPUB High Friction	VR
Standard (Steel)	○	○	○	○	○	○	○
HCP (Hard Chrome Plating) Rust-inhibitive applications such as in clean rooms	○	○	○	○	○	○	
SS (18-8 Stainless Steel) Applications requiring non-magnetism and corrosion resistance*2	○	○	○	○	○	○	
Lambda (Lube Free) Applications where lubrication is not permitted or not preferable	○	○	○	○	○	○	

Note: *1. Urethane lining is available only for RF2030VRP.
*2. Slight magnetism occurs due to plastic deformation during parts processing and assembly. For an application requiring complete non-magnetism, contact a Tsubaki representative for details.
3. HCP and SS base chains using steel rollers are made-to-order. Steel rollers on Lambda chain require lubrication.

Roller Classification by Use

Roller Type	Roller: Large Roller (Roller Color)	Roller: Small Roller (Roller Color)	Classification	Lubrication	Environment
VRPA Standard	Standard (Brown)	Standard (Gray)	10 dB quieter than standard plastic outboard roller chain	No lubrication required.	Even if the base chain is HCP or SS, the chain cannot be used in a place where it is exposed to water due to the use of engineering plastic rollers.
VRPB High Friction		High Friction (Off white)	Rapid start-up Low noise		
VRPC Electro-Conductive	Conductive (Black)	Standard (Gray)	Volume resistivity $10^6\Omega\cdot$cm		
VRPD Electro-Conductive, High Friction		High Friction (Off white)	Volume resistivity $10^6\Omega\cdot$cm Rapid start-up / Low noise		
VRPUA Standard	Urethane Lining (Clear)	Standard (Gray)	Direct placement on conveyor		
VRPUB High Friction		High Friction (Off white)	Direct placement on conveyor Rapid start-up / Low noise		
VR	Steel	Steel	High load	Required	Will rust in humid environments.

Note: Please refer to the Guidelines for Use on page 160.

Roller Type	VRPA	VRPB	VRPC	VRPD	VRPUA	VRPUB	VR
Appearance		Low noise		Low noise			

Double Plus Chain

Principle of 2.5 Times Free-Flow Speed

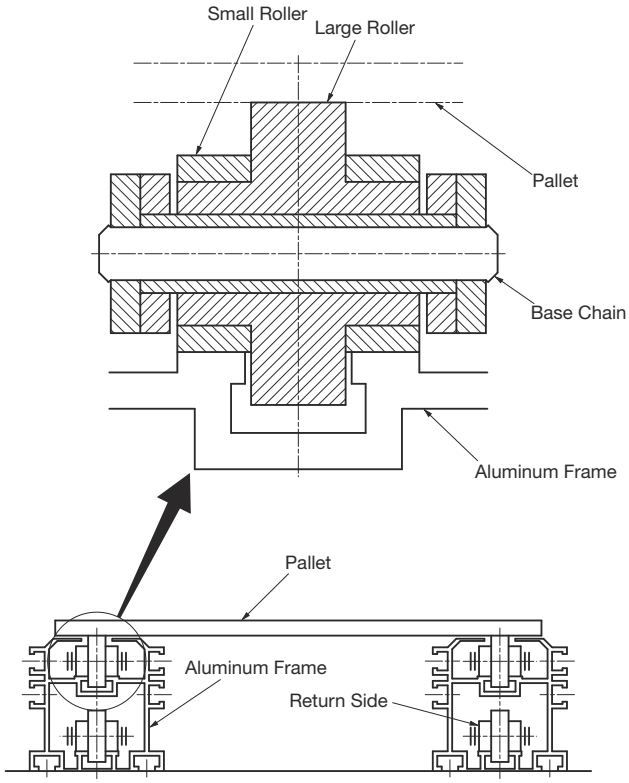

1. Conveyance

Friction between the large roller (○) and the small roller (●) causes the rollers to rotate together. The difference in the diameters of the rollers causes the speed of the conveyed object to be 2.5 times that of the chain.

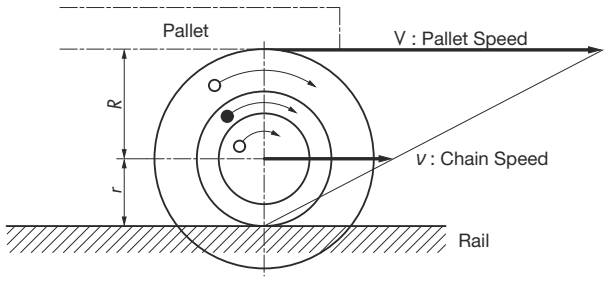

Chain speed: v
Pallet speed: V

Radius of the small roller: r
Radius of the large roller: R

When the chain runs at speed v, the peripheral speed on the circumference of the small roller (rolling speed on the rail running face) becomes " v ".Since the large and small rollers now rotate at the same angular speed, the peripheral speed on the circumference of the large roller is calculated as below, based on the ratio of the radii:

$$\left(\frac{R}{r}\right)\cdot v$$

Consequently, the conveying speed V is the sum of the peripheral speed $\left(\frac{R}{r}\right)\cdot v$ and the chain speed v.

$$V=\left(\frac{R}{r}\right)\cdot v+v$$

$$V=\left(\frac{R}{r}+1\right)\cdot v$$

From the ratio of radii $\left(\frac{R}{r}\right)\fallingdotseq 1.5$

$$V\fallingdotseq(1.5+1)\cdot v\fallingdotseq 2.5\,v$$

Position of Chain and Pallet During Conveyance

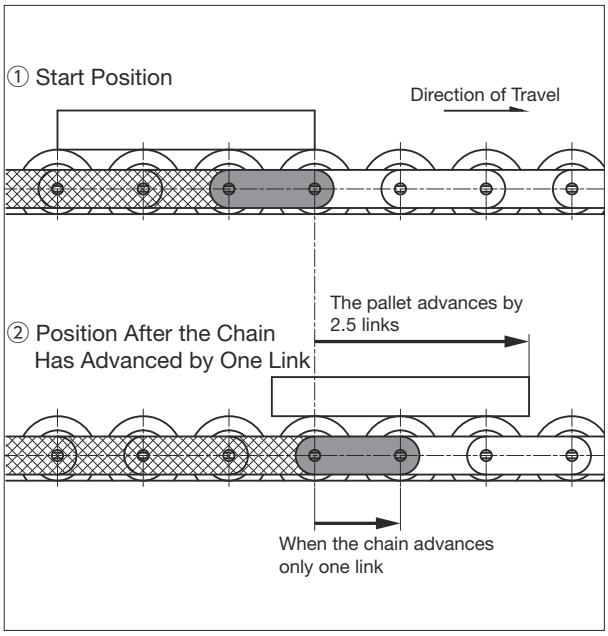

2. Accumulation

With a braking force applied to the large roller, a slip occurs between the large (○) and small (●) rollers so as to allow free-flow conveyance.

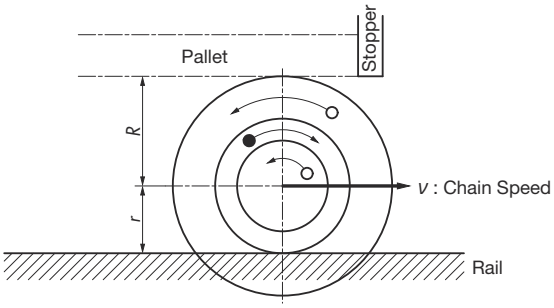

Maximum Allowable Load

Max. Allowable Load --- Engineering Plastic Roller Series

Size & Roller Type	Base Chain Type / Roller Type	Max. Allowable Load kN {kgf} A, C, UA*	Max. Allowable Load kN {kgf} B, D, UB*	Operating Temperature Range °C
RF2030VRP RF2030VRP-SC	Standard	0.55{56}	0.27{28}	−10 to 60
	Lambda			
	HCP			
	SS	0.27{28}		
RF2040VRP RF2040VRP-SC	Standard	0.88{90}	0.44{45}	
	Lambda			
	HCP			
	SS	0.44{45}		
RF2050VRP RF2050VRP-SC	Standard	1.37{140}	0.69{70}	
	Lambda			
	HCP			
	SS	0.69{70}		
RF2060VRP RF2060VRP-SC	Standard	2.06{210}	1.03{105}	
	Lambda			
	HCP			
	SS	1.03{105}		
RF2080VRP RF2080VRP-SC	Standard	5.30{540}	2.65{270}	
	Lambda			
	HCP			
	SS	2.65{270}		

* Urethane lining is available only for RF2030VRP.

Max. Allowable Load --- Steel Roller Series

Size & Roller Type	Max. Allowable Load kN {kgf}	Operating Temperature Range °C
RF2030VR	0.98{100}	−10 to 150 For use at temperatures of 60°C or more, lubricate chain with high-temperature lubricant. (Refer to Table 27 on page 170.)
RF2040VR	1.57{160}	
RF2050VR	2.45{250}	
RF2060VR	3.73{380}	
RF2080VR	5.30{540}	

Basic Structure of Model Numbers

◆ Model numbering example: Double Plus chain, Center roller chain

RF2040 VRPA - LMC + 160L - JR

① ② ③ ④ ⑤

◆ Model numbering example: Connecting link

RF2060 VRP - SC - JL

① ⑥ ③ ⑦

① Size	Indicates chain size.	
② Roller type	**VR●●** : Double Plus chain **CR** : Center roller chain	See page 90
③ Series	**LMC** : Double Plus Lambda chain **SC** : Double Plus chain with snap cover **LMCSC** : Double Plus Lambda chain with snap cover	
④ Number of links	Specify the number of links. Chains are configured in standard-length units. Please refer to the page 93-94 for the standard-length units. If it exceeds this standard-length, it will be divided into standard-length and fractional links.	
⑤ End link	Indicates the configuration of the chain ends.	See page 18
⑥ Roller type (connecting link)	**VRP** : Double Plus chain, engineering plastic rollers, urethane lining **VR** : Double Plus chain, steel rollers **CR** : Center roller chain	
⑦ Part name	**JL** : Connecting link	

Double Plus Chain

Chain No. p.92 p.139 p.92 p.141-

Base Chain

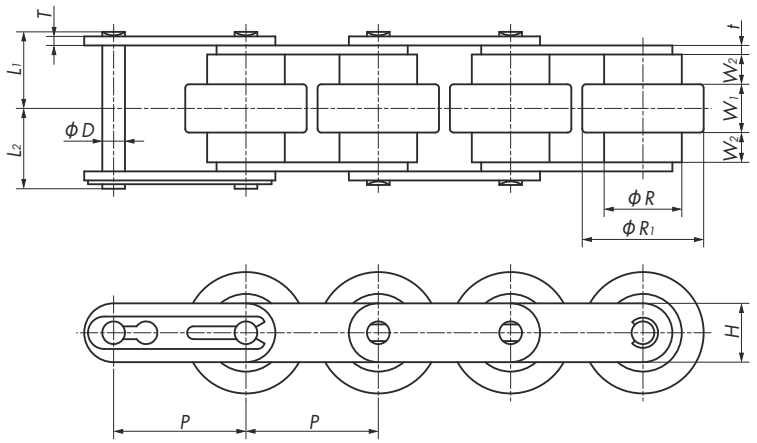

Size	Pitch P	Roller Dia.		Width		Plate			Pin			Approx. Mass kg/m		No. of Links per Unit	
		R	R1	W1	W2	t	T	H	D	L1	L2	Engineering Plastic Roller	Steel Roller	Engineering Plastic Roller	Steel Roller
RF2030	19.05	11.91	18.3	8.0	4.0	1.5	1.5	9.0	3.5 (3.00)	12.05	13.25	0.6	1.4	160	
RF2040	25.40	15.88	24.6	10.3	5.7	2.0	1.5	12.0	3.97	15.8	17.0	1.0	2.5	120	
RF2050	31.75	19.05	30.6	13.0	7.1	2.4	2.0	15.0	5.09	19.55	21.25	1.4	3.7	96	
RF2060	38.10	22.23	36.6	15.5	8.5	3.2	3.2	17.2	5.96	24.5	26.4	2.0	5.6	80	
RF2080	50.80	28.58	48.0	20.0	15.0	4.0	4.0	23.0	7.94	35.8	38.0	3.9	8.6	60	30

Note: 1. The figure inside ( ) is for RF2030VRP-LMC.
2. RF2030VRP-LMC connecting links use a cotter pin.
3. Lambda bushes are not notched.
4. The above dimensions are nominal dimensions and may differ from actual dimensions.

Double Plus Chain with Snap Cover

Chain No. p.92 | p.139 | p.92 | p.141-

Base Chain

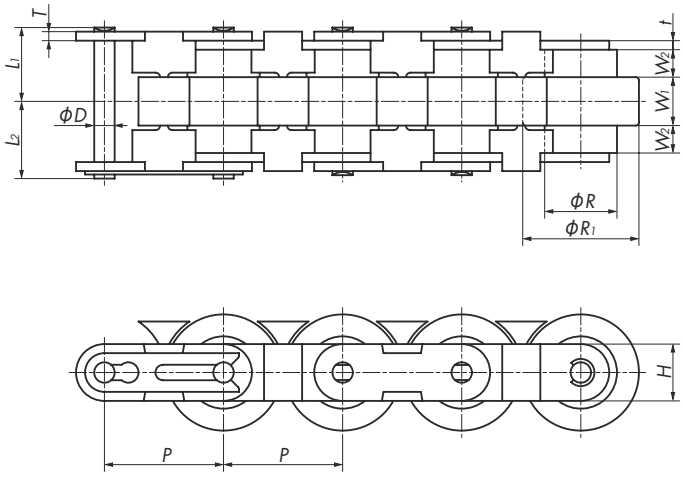

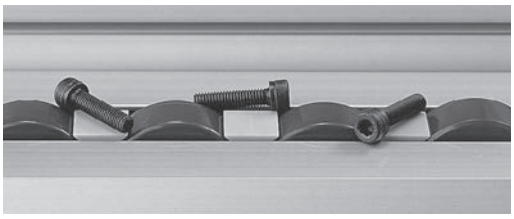

Snap covers prevent small parts from falling into the frame.

Size & Series	Pitch P	Roller Dia.		Width		Plate			Pin			Approx. Mass kg/m		No. of Links per Unit	
		R	R1	W1	W2	t	T	H	D	L1	L2	Engineering Plastic Roller	Steel Roller	Engineering Plastic Roller	Steel Roller
RF2030-SC	19.05	11.91	18.3	8.0	4.0	1.5	1.5	9.0	3.59 (3.00)	12.05	13.25	0.6	1.4	160	80
RF2040-SC	25.40	15.88	24.6	10.3	5.7	2.0	1.5	12.0	3.97	15.8	17.0	1.0	2.5	120	60
RF2050-SC	31.75	19.05	30.6	13.0	7.1	2.4	2.0	15.0	5.09	19.55	21.25	1.4	3.7	96	48
RF2060-SC	38.10	22.23	36.6	15.5	8.5	3.2	3.2	17.2	5.96	24.5	26.4	2.0	5.6	80	40
RF2080-SC	50.80	28.58	48.0	20.0	15.0	4.0	4.0	23.0	7.94	35.8	38.0	3.9	8.6	60	30

Note: 1. The figure inside ( ) is for RF2030VRP-LMC.
2. The snap cover is made of engineering plastic and is light gray in color.
3. RF2030-VRP-LMCSC connecting links use a cotter pin.
4. Lambda bushes are not notched.
5. The base chain is for dedicated use with snap covers.
6. Snap covers cannot be attached onto Double Plus Chain shown on page 101.
7. Offset links are not available.
8. The above dimensions are nominal dimensions and may differ from actual dimensions.

Snap Cover

For Outer Plate	For Inner Plate
RF2030VRP-SCP	RF2030VRP-SCR
RF2040VRP-SCP	RF2040VRP-SCR
RF2050VRP-SCP	RF2050VRP-SCR
RF2060VRP-SCP	RF2060VRP-SCR
RF2080VRP-SCP	RF2080VRP-SCR

Gap Between Frame and Snap Cover

Snap covers minimize the gap between the aluminum frame and large rollers and prevent small parts from falling into the frame.

Note: Check for the potential of small parts to fall and get jammed under actual conditions in advance.

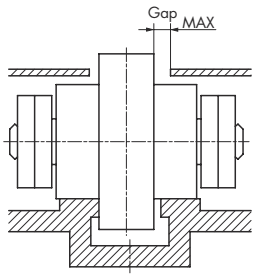

Size	Max. Gap
RF2030	1.5
RF2040	2.2
RF2050	2.5
RF2060	3.5
RF2080	4.7

Center Roller Chain

Chain No. p.92 | p.139 | p.92 | p.141-

Construction and Features

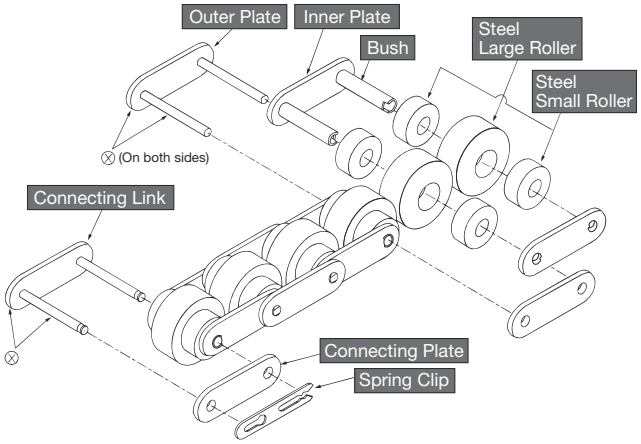

Parts marked with ⊗ are press fit.
Other parts are slip fit.

◆ Same Speed

The speed of the chain and conveyed objects is the same ratio of 1:1.

◆ Stable Conveyance

Center Roller Chain allows stable conveyance, as its center of gravity is lower than that of Top Roller Chain and conveyed items are received on rollers on both sides.

Accessories for Double Plus chain can be used with center roller chain.
Use an aluminum frame with steel rail for the frame.

Maximum Allowable Load

Size & Roller Type	Max. Allowable Load kN {kgf}	Operating Temperature Range °C
RF2040CR	1.57{160}	−10 to 150 For use at temperatures of 60°C or more, lubricate chain with high-temperature lubricant. (Refer to Table 27 on page 170.)
RF2050CR	2.45{250}	
RF2060CR	3.73{380}	
RF2080CR	5.30{540}	

■ Base Chain

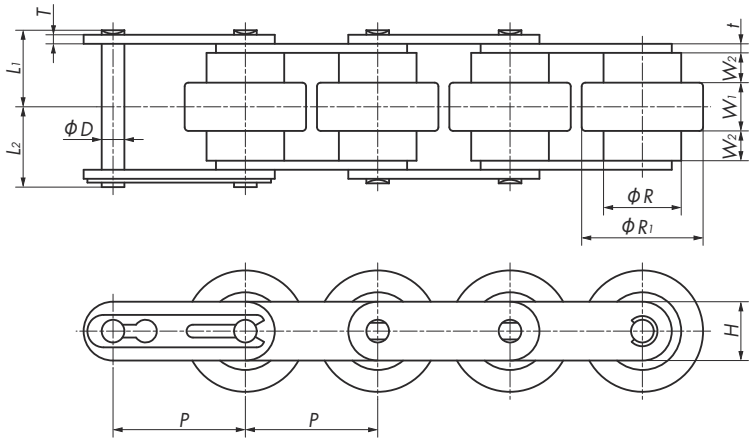

Size & Roller Type	Pitch P	Roller Dia.		Width		Plate			Pin			Approx. Mass kg/m	No. of Links per Unit
		R	R1	W1	W2	t	T	H	D	L1	L2		
RF2040CR	25.40	15.88	24.6	10.3	5.7	2.0	1.5	12.0	3.97	15.8	17.0	2.5	120
RF2050CR	31.75	19.05	30.6	13.0	7.1	2.4	2.0	15.0	5.09	19.55	21.25	3.7	96
RF2060CR	38.10	22.23	36.6	15.5	8.5	3.2	3.2	17.2	5.96	24.5	26.4	5.6	80
RF2080CR	50.80	28.58	48.0	20.0	15.0	4.0	4.0	23.0	7.94	35.8	38.0	8.6	30

Note: The above dimensions are nominal dimensions and may differ from actual dimensions.

• Center Roller Chain with snap cover is also available. • Use special sprockets for Double Plus Chain.

Accessories for Double Plus Chain

Frames

1) Aluminum Frame

This is a frame for Double Plus chain (including chain with snap covers) that uses engineering plastic for the rollers.

2) Aluminum Frame with Steel Rail

Steel rails are laid on the small roller area on the conveying side of the aluminum frame. (See the dimensional drawing.)
This aluminum frame can be used with all Double Plus Chains (including chain with snap covers) and Center Roller Chains.

3) Frame for Drive and Driven Sections

The frame is provided with a notch on the end face for receiving the return-side section of the chain.
Standard length: 1 m (for all sizes)
Aluminum frames and aluminum frames with steel rails are available.

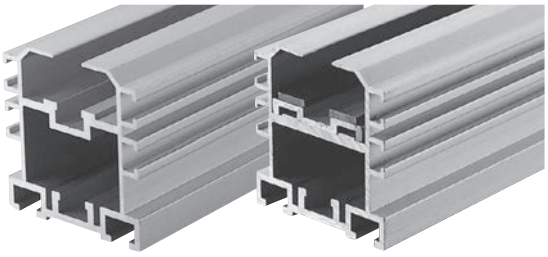

Aluminum Frame

Aluminum Frame with Steel Rail

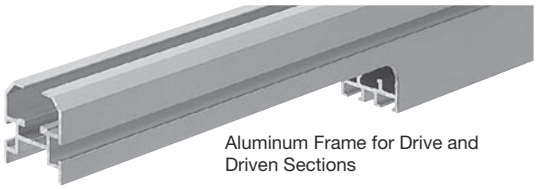

Aluminum Frame for Drive and Driven Sections

Pallet Guide Rails

1) This rail is installed on the side of the aluminum frame to guide the pallet.
2) The pallet guide rail is available for the middle section, and drive and driven sections.

Plastic Rails

1) The plastic rail is installed on the pallet guide rail for smooth pallet sliding.
2) The plastic rail is available for the middle section, and drive and driven sections.

Return Guides

The return guide guides the Double Plus Chain on the return side at both ends of the aluminum frame.

Brackets

The bracket is a fitting for attaching the return guide.

Frame Joints

The frame joint is a nut-type part for connecting frames.

Examples of Use

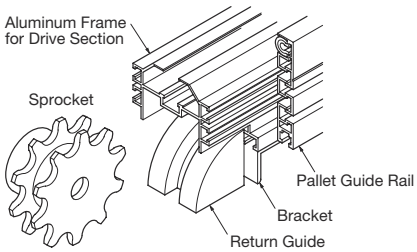

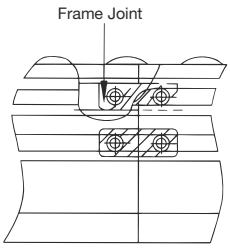

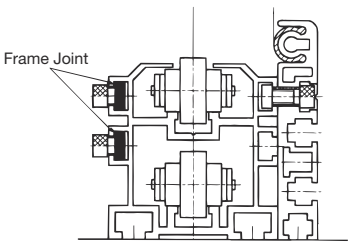

Accessories for Double Plus Chain

■ Frames for the Middle Section

Aluminum Frame

Material: Aluminum

Frame No. : **RF2030VRP-R2**

Standard length: 2 m
Approx. mass: 1.4 kg/m
Stock item

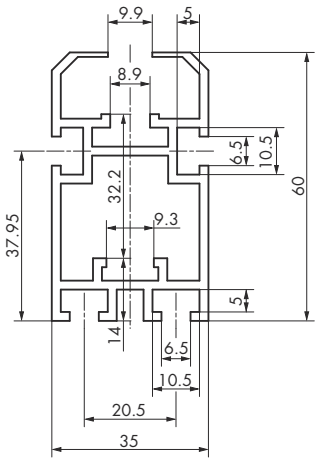

Frame No. : **RF2040VRP-R2**
RF2050VRP-R2
RF2060VRP-R2

Standard length: 2 m
Dimensions and approx. mass:
See table below
Stock item

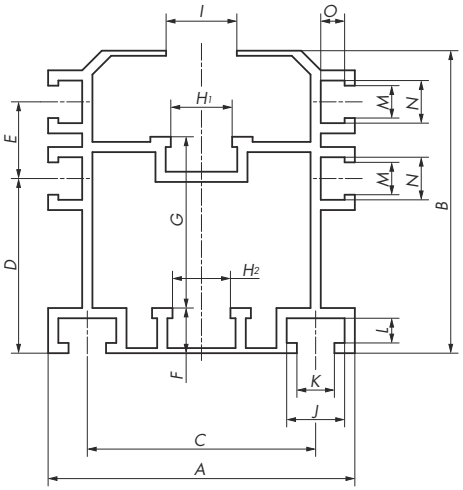

Aluminum Frame with Steel Rail

Material: Main body = Aluminum Steel rail = SS400 (JIS)

Frame No. : **RF2030VRP-R2S**

Standard length: 2 m
Approx. mass: 2.2 kg/m
Stock item

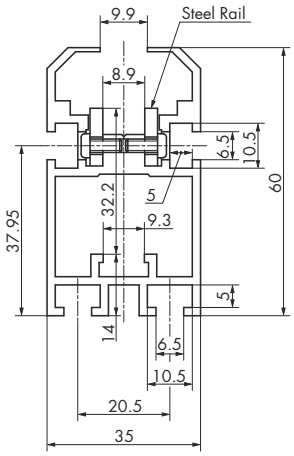

Frame No. : **RF2040VRP-R2S**
RF2050VRP-R2S
RF2060VRP-R2S

Standard length: 2 m
Dimensions and approx. mass:
See table below
Stock item

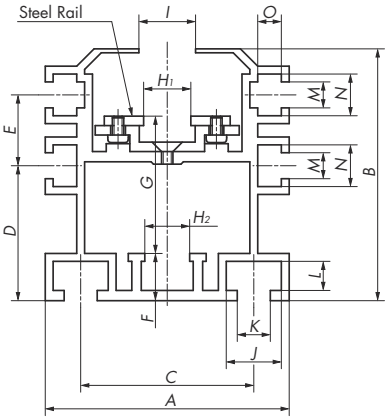

Frame No. : **RF2080VRP-R2S**

Standard length: 2 m
Approx. mass: 9.9 kg/m
Stock item

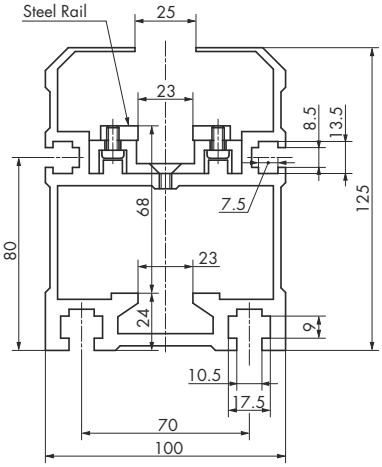

Frame No. : **RF2050VRP-R2HS**

Standard length: 2 m
Approx. mass: 6.3 kg/m
Made to order

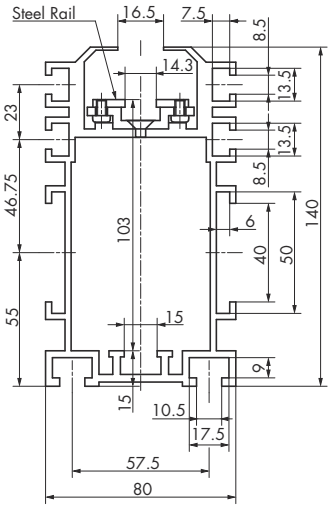

Note: Refer to page 155 for the attachment position of steel rails for aluminum frames with steel rails.
Refer to pages 153 and 154 for connecting the frame.

Aluminum Frame No.		A	B	C	D	E	F	G	H_1	H_2	I	J	K	L	M	N	O	Approx. Mass kg/m	
Aluminum Frame	Aluminum Frame with Steel Rail																	Aluminum Frame	Aluminum Frame with Steel Rail
RF2040VRP-R2	**RF2040VRP-R2S**	63	66	44.5	35.25	18.5	13	34.9	11.4	12	13.5	13.5	8.5	7.5	6.5	10.5	5.0	2.6	3.7
RF2050VRP-R2	**RF2050VRP-R2S**	78	80	55.5	41.75	23.0	15	43.0	14.3	15	16.5	17.5	10.5	9.0	8.5	13.5	7.5	3.6	5.0
RF2060VRP-R2	**RF2060VRP-R2S**	95	91	72.5	51.25	23.5	15	50.5	17.2	18	19.5	17.5	10.5	9.0	8.5	13.5	7.5	4.2	5.9

Note: 1. Stock items.
2. Sold in standard lengths. Can be cut to any length and/or holes can be added. Contact a Tsubaki representative for details.
3. For steel roller base chain, use an aluminum frame with steel rail.
4. The above dimensions are nominal dimensions and may differ from actual dimensions.
5. Contact a Tsubaki representative for RF2030VRP-R3 and RF2040VRP-R4 to RF2060VRP-R4 chains.
6. Contact a Tsubaki representative for RF2030VRP-R3S, RF2040VRP-R4S to RF2060VRP-R4S, and RF2050VRP-R3SH chains.

■ Frames for Drive and Driven Sections

- The cross-sectional shape, dimensions, and material of these frames are the same as those of frames for the middle section.
- The dimension *Q* is different in frames for drive and driven sections.
- Refer to page 155 for the attachment position of steel rails for aluminum frames with steel rails.
- Refer to pages 153 and 154 for connecting the frame.

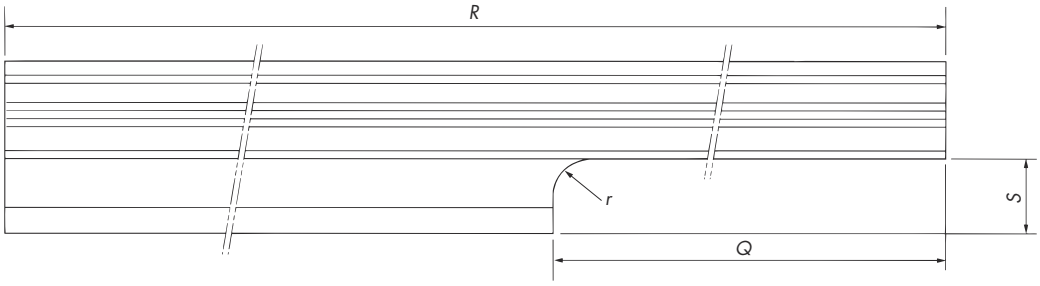

Rail Side View

Drive and Driven Section Frame No.				Q		R (Standard Length)	S	r	Approx. Mass kg/m	
Aluminum Frame		Aluminum Frame with Steel Rail								
For Drive Section	For Driven Section	For Drive Section	For Driven Section	For Drive Section	For Driven Section				Aluminum Frame	Aluminum Frame with Steel Rail
RF2030VRP-R1K	**RF2030VRP-R1J**	**RF2030VRP-R1SK**	**RF2030VRP-R1SJ**	210	80	1m	25	10	1.3	2.1
RF2040VRP-R1K	**RF2040VRP-R1J**	**RF2040VRP-R1SK**	**RF2040VRP-R1SJ**	300	100	1m	25		2.4	3.5
RF2050VRP-R1K	**RF2050VRP-R1J**	**RF2050VRP-R1SK**	**RF2050VRP-R1SJ**	340	120	1m	30	12.5	3.4	4.8
RF2060VRP-R1K	**RF2060VRP-R1J**	**RF2060VRP-R1SK**	**RF2060VRP-R1SJ**	430	130	1m	40		4.0	5.7
—	—	**RF2080VRP-R1SK**	**RF2080VRP-R1SJ**	550	200	1m	60		—	9.5

Note: 1. Stock items.
2. Sold in standard lengths. Can be cut to any length and/or holes can be added. Contact a Tsubaki representative for details.
3. The above dimensions are nominal dimensions and may differ from actual dimensions.

■ Accessory Cut Specifications for Double Plus Chain (Custom Quote Product)

Applicable products: Aluminum Frame, Aluminum Frame with Steel Rail (including drive and driven sections), Pallet Guide Rails, Plastic Rails

Cutting Examples

Example 1: Cutting RF2060VRP-R2 into two (2) 800-mm lengths

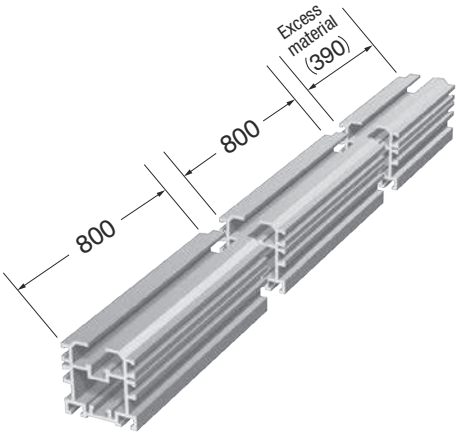

Example 2: Cutting RF2040VRP-PGR2 into a single 1500-mm length

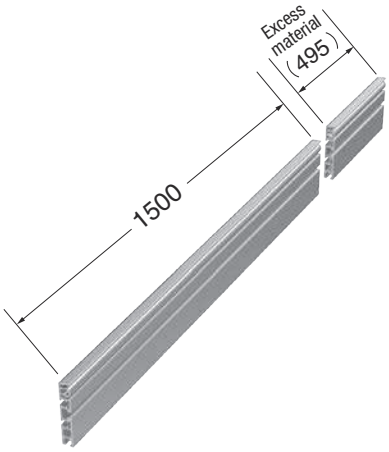

Note: 1. Cutting allowance will be around 5 mm.
2. Tsubaki will dispose of the excess material.
3. Please contact us if you would like the excess material shipped to you.

Cutting Accuracy and End Face Treatment

Cut Length *L*	Accuracy
Greater than 120 but less than 400	±0.5
Greater than 400 but less than 1000	±0.8
Greater than 1000 but less than 2000	±1.2

Note: 1. Cut length *L* can be set from 120 to 2000 mm.
2. Cut surfaces are chamfered (file finished).
3. Surface roughness of the cut surface will be worse than that of an end face of a standard cut length.
4. For Aluminum Frame with Steel Rail, depending on the cut length, steel rails and inner rails can be tapped (extra charge applies).

Cutting for Drive and Driven Sections

Cut processing can also be performed on the return side for drive and driven sections.
Specify the dimensions *Q* and *S*.
The *r* dimension is the same as in the dimension table above.

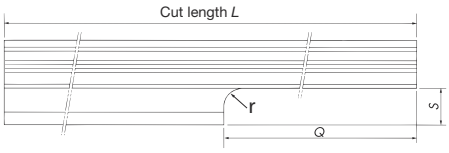

Standard Delivery Time

One (1) month
(For details, contact a Tsubaki representative.)

Accessories for Double Plus Chain

■ Pallet Guide Rails
■ Plastic Rails

Model Numbering Example

RF2040VRP-PGR□

Applicable chain size

Pallet guide rail: PGR
Plastic rail: PR

For middle section: 2 (Standard length: 2 m)
For drive and driven sections: 1 (Standard length 1 m)

● For RF2030VRP

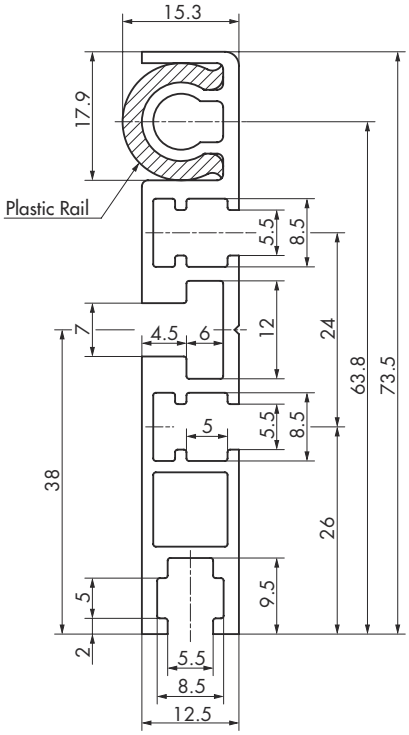

● For RF2040VRP

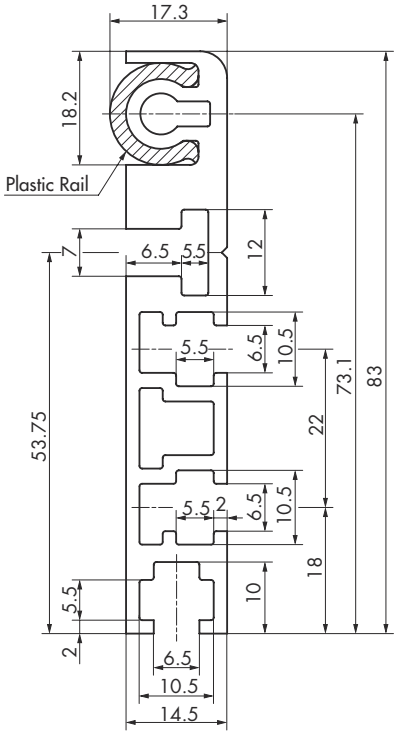

● For RF2050VRP

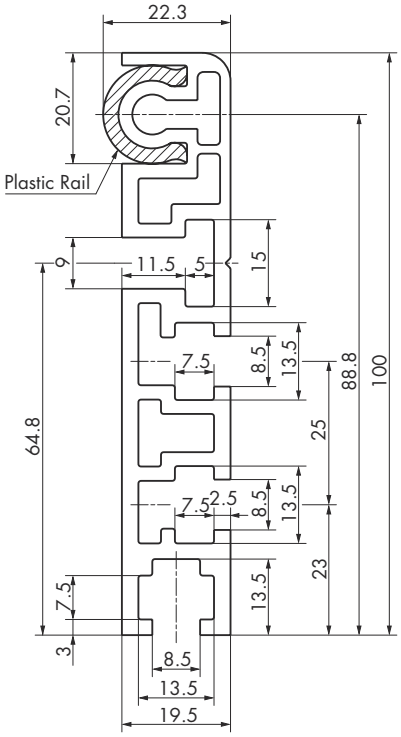

● For RF2060VRP

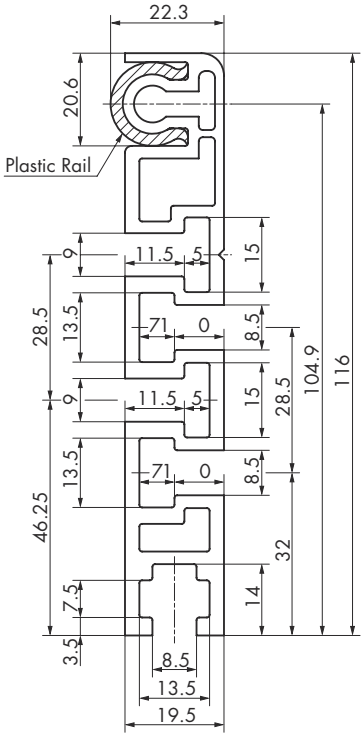

● For RF2080VRP

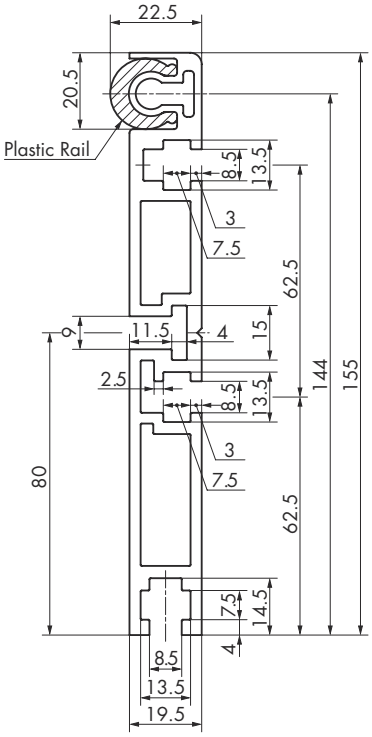

Pallet Guide Rail No.		Standard Length		Approx. Mass kg/m	Material
For Middle Section	For Drive and Driven Sections	For Middle Section	For Drive and Driven Sections		
RF2030VRP-PGR2	**RF2030VRP-PGR1**	2m	1m	1.0	Aluminum
RF2040VRP-PGR2	**RF2040VRP-PGR1**	2m	1m	1.6	
RF2050VRP-PGR2	**RF2050VRP-PGR1**	2m	1m	2.1	
RF2060VRP-PGR2	**RF2060VRP-PGR1**	2m	1m	2.4	
RF2080VRP-PGR2	**RF2080VRP-PGR1**	2m	1m	3.5	

Pallet Guide Rail No.		Standard Length		Approx. Mass kg/m	Material
For Middle Section	For Drive and Driven Sections	For Middle Section	For Drive and Driven Sections		
RF2030VRP-PR2	**RF2030VRP-PR1**	2m	1m	0.07	Ultra-high molecular weight polyethylene
RF2040VRP-PR2	**RF2040VRP-PR1**	2m	1m	0.07	
RF2050VRP-PR2	**RF2050VRP-PR1**	2m	1m	0.09	
RF2060VRP-PR2	**RF2060VRP-PR1**	2m	1m	0.09	
RF2080VRP-PR2	**RF2080VRP-PR1**	2m	1m	0.09	

Note: 1. Stock items.
2. Sold in standard lengths. Can be cut to any length and/or holes can be added. Contact a Tsubaki representative for details.
3. Plastic rails are not supplied with a pallet guide rail. The rail for the middle section and the rail for the drive and driven sections are different only in their standard length.
4. Contact a Tsubaki representative for RF2030VRP-PGR3 and RF2040VRP-PGR4 to RF2060VRP-PGR4 chains.
5. Contact a Tsubaki representative for RF2030VRP-PR3S and RF2030VRP-PR4S to RF2060VRP-PR4S chains.

■ Return Guides

For Double Plus Chain (Return guides for RF2030 and RF2040 can also be used for Double Plus Chain with snap cover.)

Can also be used with Center Roller Chain.

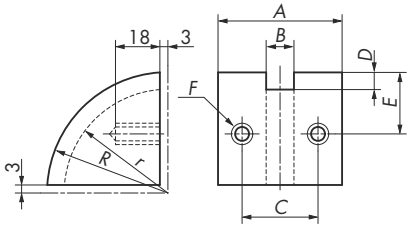

Return Guide No.	A	B	C	D	E	F	r	R	Approx. Mass kg	Applicable Chain
RF2030VRP-RG	34	9	22	6	31	M6	54	60	0.075	Double Plus Chain and Double Plus Chain with snap cover
RF2040VRP-RG	50	12	30	8	30	M8	52	60	0.11	
RF2050VRP-RG	56	15	35	10	32	M8	50	60	0.12	Double Plus Chain
RF2060VRP-RG	60	18	39	12.5	32	M8	47.5	60	0.12	
RF2080VRP-RG	70	23	45	15	41	M8	65	80	0.26	

Note: Material: Ultra-high molecular weight polyethylene. Stock items.

For Double Plus Chain with Snap Cover

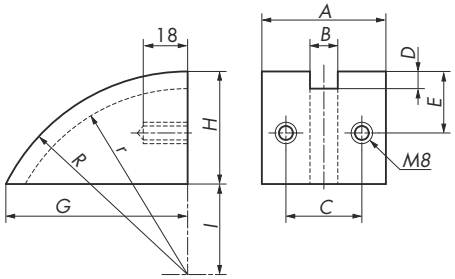

Return Guide No.	A	B	C	D	E	G	H	I	r	R	Approx. Mass kg
RF2050VRP-RG-SC	56	15	35	10	32	90.3	57	43	90	100	0.18
RF2060VRP-RG-SC	60	18	39	12.5	32	90.3	57	43	87.5	100	0.18
RF2080VRP-RG-SC	70	23	45	15	41	139.6	77	88	150	165	0.45

Note: 1. The return guides for RF2030 and RF2040 can also be used as the return guides for Double Plus Chain.
2. Material: Ultra-high molecular weight polyethylene
3. Items in bold are stock items.

■ Brackets

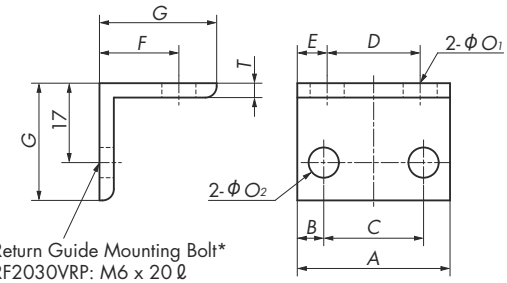

Return Guide Mounting Bolt*
RF2030VRP: M6 x 20 ℓ
Other sizes: M8 x 20 ℓ

Bracket No.	A	B	C	D	E	F	G	T	O_1	O_2	Approx. Mass kg
RF2030VRP-GB	34	6	22	20.5	7.2	18	25	3	6.5	6.5	0.012
RF2040VRP-GB	60	15	30	44.5	8.2	20	30	3	8.5	8.5	0.026
RF2050VRP-GB	76	20.5	35	55.5	10.7	24	35	4	10.5	8.5	0.051
RF2060VRP-GB	94	27.5	39	72.5	11.2	24	35	4	10.5	8.5	0.064
RF2080VRP-GB	100	27.5	45	70	15	24	35	4	10.5	8.5	0.068

Note: 1. * The mounting bolt is not supplied with the bracket.
2. Material: Aluminum. Stock items.

■ Frame Joints

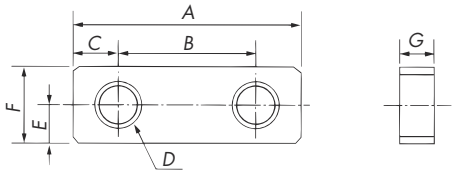

Frame Joint No.	A	B	C	D	E	F	G	Approx. Mass kg
RF2030VRP-FJ	40	24	8	M6	5	10	5	0.013
RF2040VRP-FJ	40	24	8	M6	5	10	5	0.013
RF2050VRP-FJ	40	24	8	M8	6.5	13	6	0.02
RF2060VRP-FJ	40	24	8	M8	6.5	13	6	0.02
RF2080VRP-FJ	40	24	8	M8	6.5	13	6	0.02

Note: Material: Stainless steel. Stock items.

Outboard Roller Chain

Outboard Roller Chain is a Free Flow Chain on which the pins of a Double Pitch or RS Chain are extended, and free-running outboard rollers are installed on the extended pins.

Construction

■ Double Pitch Chain with Outboard Rollers

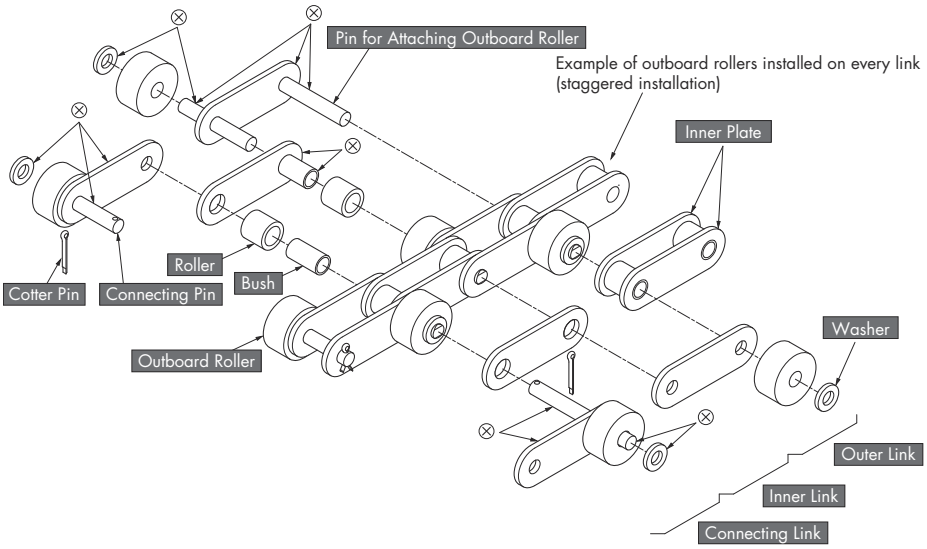

■ RS Chain with Outboard Rollers

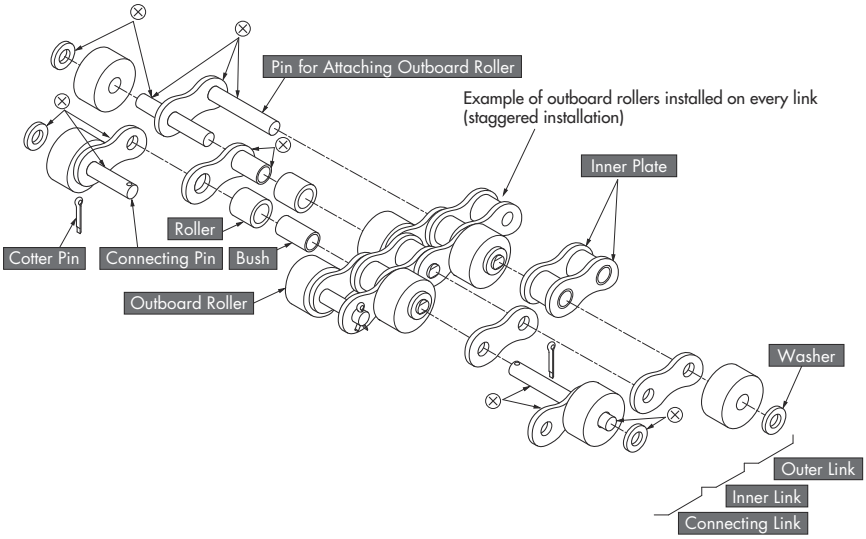

■ Poly Steel Chain with Outboard Rollers

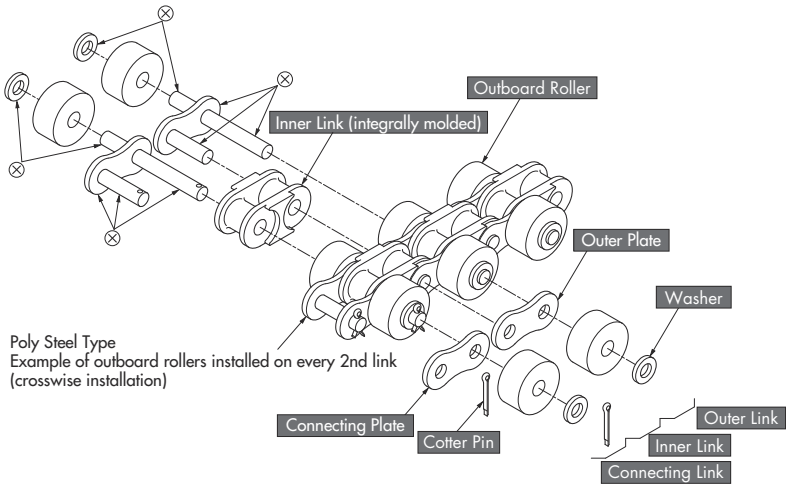

Parts marked with ⊗ are press fit. Other parts are slip fit.

Features

1) Outboard rollers allow for a compact conveyor, while the ability to flex backwards allows easy layout on the return side.
2) Since numerous rollers can be installed, Outboard Roller Chain is suitable for conveyors on which small objects are placed directly.

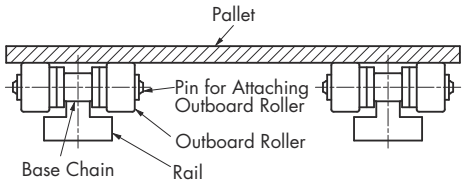

Base Chain and Roller Combinations

Base Chain			Plastic Outboard Roller			Plastic Outboard Roller with Brake		Steel Outboard Roller	
Size	Roller Type	Series	Plastic Roller	Conductive Roller	KV Roller	Plastic Roller with Brake	Electro-Conductive Roller with Spring Brake	Steel Roller (Stainless Steel Roller*3)	Lambda Roller
RF2040	S	Standard*4	○	○		○	○	○	○
		LMC*1	○	○		○	○	○	○
		LMCNP*1	○	○		○	○	○	○
		SS*2	○	○	○	○	○	○	
	R	Standard	○	○		○	○	○	
		LMC*1	○	○		○	○	○	○
		LMCNP*1	○	○		○	○	○	○
		SS*2	○	○	○	○	○	○	
	RP	LMC*1	○	○		○	○	○	○
		LMCNP*1	○	○		○	○	○	○
		SS*2	○	○	○	○	○	○	
RF2050	S	Standard*4	○	○		○	○	○	○
		LMC*1	○	○		○	○	○	○
		LMCNP*1	○	○		○	○	○	○
		SS*2	○	○	○	○	○	○	
	R	Standard	○	○		○	○	○	
		LMC*1	○	○		○	○	○	○
		LMCNP*1	○	○		○	○	○	○
		SS*2	○	○	○	○	○	○	
	RP	LMC*1	○	○		○	○	○	○
		LMCNP*1	○	○		○	○	○	○
		SS*2	○	○	○	○	○	○	
RF2060	S	Standard*4	○	○		○	○	○	○
		LMC*1	○	○		○	○	○	○
		LMCNP*1	○	○		○	○	○	○
		SS*2	○	○	○	○	○	○	
	R	Standard	○	○		○	○	○	
		LMC*1	○	○		○	○	○	○
		LMCNP*1	○	○		○	○	○	○
		SS*2	○	○	○	○	○	○	
	RP	LMC*1	○	○		○	○	○	○
		LMCNP*1	○	○		○	○	○	○
		SS*2	○	○	○	○	○	○	
RF2080	S	Standard	○					○	
		LMC*1	○					○	○
		SS*2	○					○	
RF2100	S	Standard	○					○	
		SS*2	○					○	
RS40	–	Standard*4	○	○	○	○	○	○	○
		LMC*1	○			○	○		○
		SS*2				○	○	○	
		PC	○			○	○		
RS50	–	Standard*4	○	○	○	○	○	○	○
		LMC*1	○			○	○		○
		SS*2				○	○	○	
		PC	○			○	○		
RS60	–	Standard*4	○	○	○	○	○	○	○
		LMC*1	○			○	○		○
		SS*2				○	○	○	
		PC	○			○	○		
RS80	–	Standard	○					○	○
		LMC*1	○					○	○
		SS*2	○					○	
RS100	–	Standard	○					○	
		SS*2	○					○	

Note: 1. "Base chain" refers to all parts of the chain, except the outboard rollers.
2. *1: Even if the base chain is LMC or LMCNP chain, the steel outboard rollers need to be lubricated.
3. *2: Pins for attaching outboard rollers are made of precipitation-hardened stainless steel.
4. Chains with conductive rollers and NP base chain use a spring brake.
5. When the outboard roller is a KV roller, the rollers of the base chain are S rollers.
6. *3: When the base chain is an SS chain, the rollers are stainless steel.
7. *4: If the steel outboard rollers are Lambda rollers, the base chain needs to be lubricated.

Outboard Roller Chain

Base Chain Specifications

1. Standard

Base chain is available with steel rollers (R, S) or plastic R rollers. RS Chain is available with steel rollers. R roller for Double Pitch Chain is available in steel or plastic.

1) Steel Roller Chain

(1) All parts are made of heat-treated steel.
(2) Operating temperature range: –10˚C to 150˚C
(3) Lubrication required.

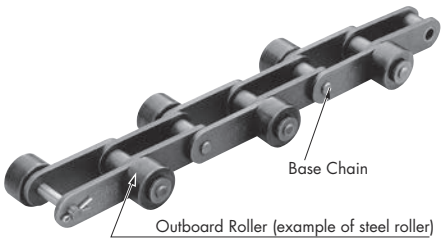

2) Plastic R Roller Chain
(available only for Double Pitch Chain)

(1) The R roller on the base chain is made of engineering plastic.
(2) Features of engineering plastic R roller chain
① Lightweight (30% weight reduction compared with steel roller chain)
② Low noise (5 to 7 dB noise reduction compared with steel roller chain)
③ Lower running resistance (30% less resistance compared with steel roller chain)
④ Color of engineering plastic roller: White
⑤ Operating temperature range: –10˚C to 80˚C
⑥ Lubrication is required between the pins and the bushes.

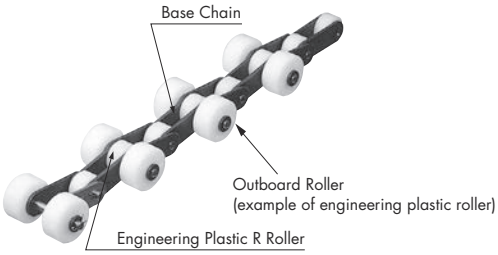

2. LMC (lube free)

- The bushes on the base chain are special oil-impregnated sintered bushes and can be used with no lubrication. (Lubrication is required on steel outboard rollers. Lambda rollers require no lubrication.)
- The allowable tension of LMC chain is the same as that of standard chain. The inner and outer plates are treated with a black oxide finish for identification.
- Operating temperature range: –10˚C to 150˚C
- Do not use the chain in environments where it will come into contact with chemicals or water, or in cleansing and degreasing environments.

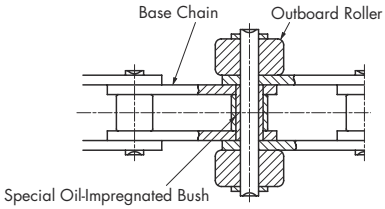

3. SS (stainless steel)

SS chain is available with stainless steel rollers (R, S) or plastic R rollers.
RS Chain is available with stainless steel rollers. S roller for Double Pitch Chain is available in stainless steel and R roller for Double Pitch Chain is available in plastic or stainless steel.

1) Stainless Steel Roller Chain

(1) All parts except pins (precipitation-hardened stainless steel) are made of 18-8 stainless steel.
(2) Operating temperature range: –20˚C to 400˚C
(3) Lubrication required.

2) Plastic R Roller Chain (available only for Double Pitch Chain)

(1) The R roller of the base chain is made of engineering plastic. Pins are made of precipitation-hardened stainless steel.
(2) Features of plastic R roller chain
① Lightweight (30% weight reduction compared with steel roller chain)
② Low noise (5 to 7 dB noise reduction compared with steel roller chain)
③ Lower running resistance (30% less resistance compared with steel roller chain)
④ Color of engineering plastic roller: White
⑤ Operating temperature range: –20˚C to 80˚C
⑥ Lubrication is required between the pins and the bushes.

4. Poly Steel

(1) This chain comprises inner links made of engineering plastic and outer links made of 18-8 stainless steel. (The pins are made of precipitation-hardened stainless steel.)
(2) No lubrication is needed, and is corrosion resistant.
(3) Lightweight (50% weight reduction compared with steel roller chain)
(4) Low noise (5 dB noise reduction compared with steel roller chain)
(5) Color of engineering plastic roller: White
(6) Operating temperature range: –20˚C to 80˚C
(7) Offset links are not available for this type.

5. NP

This chain is treated with nickel plating.

⚠ Safety Precautions (for NP Chain)

Do not use NP chain if it will come in direct contact with food or where coating flakes or wear dust can contaminate food. Also, in non-food applications, appropriately cover the chain or contact a Tsubaki representative about chain selection if using in environments where coating flakes or wear dust present problems. Though nickel is not subject to the Japan Food Sanitation Act or the Industrial Safety and Health Act, plating on sliding parts can peel.

Outboard Roller Specifications

Roller Category		Outboard Roller Type	Material	Operating Temp. Range	Description
Engineering plastic roller	Plastic roller	SRP(L)	Polyacetal (white)	−20°C to 80°C	
	Plastic roller w/ brake	SRPB(L)	Special engineering plastic (brown)	−20°C to 80°C	The use of special engineering plastic with a large coefficient of friction assures proper brake performance and enables rapid response.
	Electro-conductive roller	SRPE(L)	Special engineering plastic (black)	−20°C to 80°C	Volume resistivity $10^6\Omega$•cm (For RF2060 or smaller)
	KV roller	SRPKV(L)	Super engineering plastic (black)	−20°C to 180°C	Offers superb heat, chemical, and flame resistance, and conforms to the Japan Food Sanitation Act. In general, base chain is SS. (For RF2060 or smaller)

Roller Category		Outboard Roller Type	Material	Operating Temp. Range	Description
Steel roller	Steel roller	SR(L)	Hardened steel	−10°C to 150°C	Lubrication required
	Stainless steel roller	SR(L)	18-8 stainless steel	−20°C to 400°C	Requires additional lubrication when base chain is SS.
	Lambda roller	SRLM(L)	Hardened steel	−10°C to 150°C	Can be used lube-free. Also available with brakes. (For RS80/RF2080 or smaller)

Note: (L) indicates double pitch chain with outboard rollers when the base chain uses R rollers.

Lambda Rollers

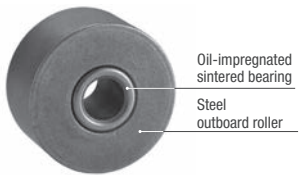

Lambda Rollers feature an oil-impregnated sintered bearing inserted into a steel outboard roller. These rollers can be used without lubrication. They can minimize the unusual noise that would otherwise occur if using unlubricated outboard rollers. A roughly 10 dB reduction in noise can be expected compared to steel rollers (based on Tsubaki in-house tests).

Watch a video showing the difference in noise.

Installation of Outboard Rollers

1. Staggered Installation

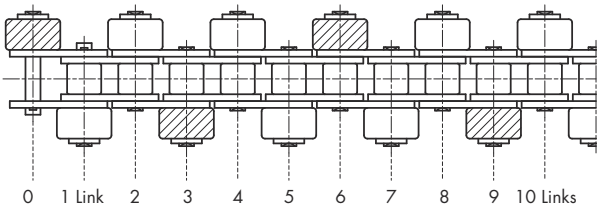

1) The diagram above shows outboard rollers installed on every link in a staggered arrangement.
2) The diagram above shows plastic brake rollers installed on every third link (the shaded part).

2. Crosswise Installation

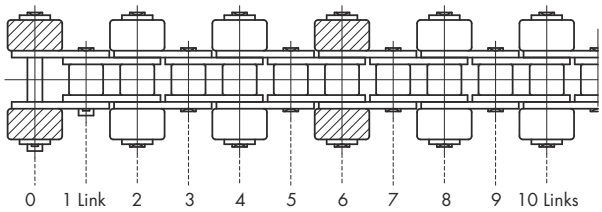

1) The diagram above shows outboard rollers installed on every second link in a crosswise arrangement. When the base chain is double pitch chain, outboard rollers can be spaced every one or more links (two links or more in the case of RS chain).
2) The diagram above shows plastic brake rollers installed on every sixth link (the shaded part).

Sprockets

■ Double Pitch Chain with Outboard Rollers

Double pitch sprockets can be used with all Double Pitch Chains with outboard rollers.
RS Roller Chain sprockets can only be used if they have S rollers and 30 or more teeth.

■ RS Chain with Outboard Rollers

RS Roller Chain sprockets having a small number of teeth (gray shaded areas in the table below) cannot be used with RS Chain with outboard rollers since the hub comes in contact with the outboard roller. To use a sprocket having a small number of teeth on RS Chain with outboard rollers, machine the hub diameter of the RS Roller Chain sprocket to adapt to the dimensions shown in the table below. When the number of sprocket teeth is other than listed below, the RS Roller Chain sprocket can be used as is.

Size \ No. of Teeth	9	10	11	12	13	14	15	16	17	18	19	20	21	22	23
RS40	20	24	28	32	36	40	44	48	52	56	60	64	68	72	76
RS50	26	31	36	41	46	51	56	61	66	71					
RS60	32	38	44	50	56										
RS80	44				76		92								
RS100		62	72	81											

Refer to page 136 for detailed information on dimensions of sprockets for RS Chain with outboard rollers.

Outboard Roller Chain

Basic Structure of Model Numbers

◆ Model numbering example: Double pitch chain with outboard rollers

RF2040	S	-	LMC	-	1L	SRP	-	T	+	160L	-	JR	-	T
①	②		③		④	⑤		⑥		⑦		⑧		⑨

◆ Model numbering example: RS chain with outboard rollers

RS40	-	LMC	-	2L	SRP	-	H	+	320L	-	JR	-	T
①		③		④	⑤		⑥		⑦		⑧		⑨

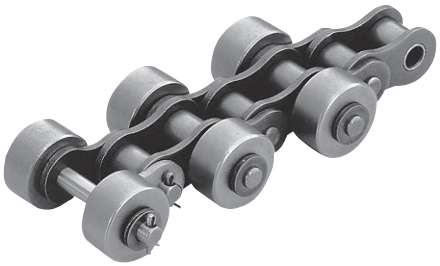

◆ Model numbering example: Double pitch chain with outboard rollers

RF2040	R	-	1L	SRL	-	H	+	120L	-	JR
①	②		④	⑤		⑥		⑦		⑧

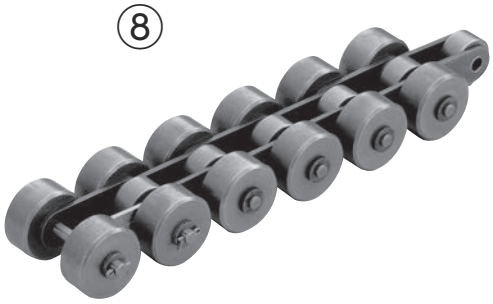

◆ Model numbering example: Poly Steel chain with outboard rollers

RS40	-	PC	-	2L	SRP	-	H	+	240L	-	JR
①		③		④	⑤		⑥		⑦		⑧

Please use the Tsubaki Power Transmission Products Information Site to generate model numbers.

Tsubaki Power Transmission Products Information Site Search

◆ Model numbering example: Connecting link

1) Staggered installation on every link

RF2040-1LSR-T - JL

①+④+⑤+⑥ ⑩

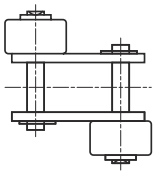

2) Staggered installation on every 2nd link

RF2040-2LSR-T - JL

①+④+⑤+⑥ ⑩

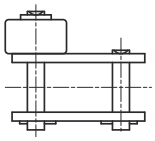

3) Staggered installation on every 3rd link

RF2040-3LSR-T - JL

①+④+⑤+⑥ ⑩

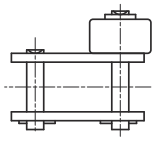

4) Crosswise installation on every link

RF2040-1LSR-H - JL

①+④+⑤+⑥ ⑩

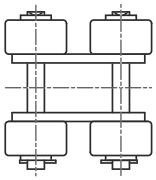

5) Crosswise installation on every 2nd link

RF2040-2LSR-H - JL

①+④+⑤+⑥ ⑩

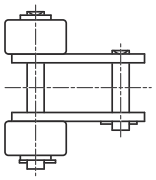

6) Crosswise installation on every 3rd link

RF2040-3LSR-H - JL

①+④+⑤+⑥ ⑩

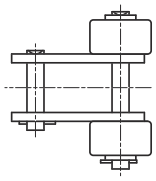

① Size	Indicates chain size.	
② Roller type of base chain	Indicates the type of roller of the base chain. **S** : S roller **R** : R roller **RP** : Plastic R roller	See page 11
③ Series	Indicates base chain specifications. Blank : Standard **NP** : Nickel-plated **LMC** : Lambda **LMCNP** : Nickel-plated Lambda **SS** : Stainless steel **PC** : Poly Steel	See page 103
④ Outboard roller spacing	Indicates the spacing between the outboard rollers.	
⑤ Type of outboard roller	Indicates the type of outboard roller. **SR(L)** : Steel roller (when base chain is stainless steel, so are the rollers) **SRP(L)** : Plastic roller **SRLM(L)** : Lambda roller **SRPB(L)** : Plastic roller with brake **SRPE(L)** : Electro-conductive roller **SRPKV(L)** : KV roller Note: (L) indicates double pitch chain with outboard rollers when the base chain uses R or plastic R rollers.	See page 104
⑥ Outboard roller installation	Indicates the installation arrangement of the outboard rollers. **T** : Staggered **H** : Crosswise	See page 104
⑦ Number of links	Specify the number of links. Chains are configured in standard-length units (3 meters), plus (if necessary) one fractional length having the number of links needed to make up the total chain length.	
⑧ End link	Indicates the configuration of the chain ends.	See page 18
⑨ Options	Indicates options available for meeting special user requirements.	See page 18
⑩ Part name	**JL** : Connecting link	

Double Pitch Chain with Outboard Rollers

Chain without Brake

Base Chain S Roller: Staggered Installation

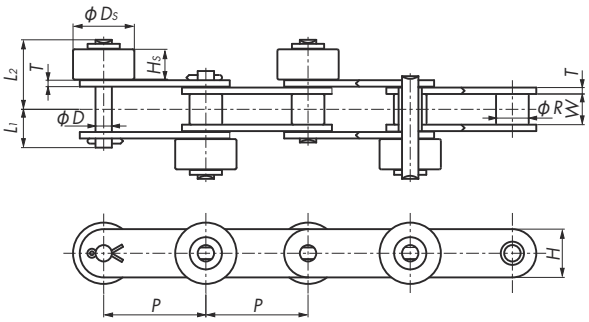

Base Chain S Roller: Crosswise Installation

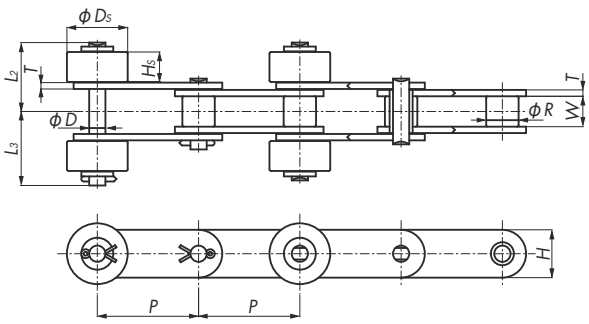

Base Chain R Roller: Staggered Installation

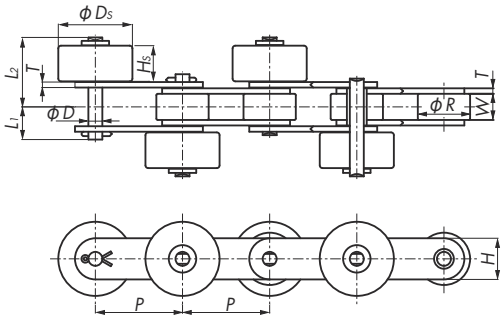

Base Chain R Roller: Crosswise Installation

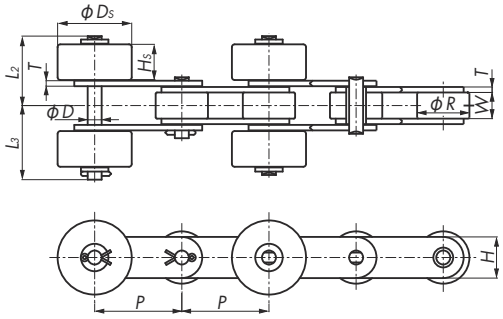

Size, Roller Type, Series, Outboard Roller Type			Roller Type	Pitch P	Roller Dia. R	Width Between Inner Link Plates W	Plate		Pin				Outboard Roller		Approx. Mass kg/m	
Plastic Outboard Roller																
Standard	Lambda	SS					Thickness T	Width H	Dia. D	L_1	L_2	L_3	DS	HS	Base Chain Steel Roller	Base Chain Plastic Roller
RF2040S-SRP	RF2040S-LMC-SRP	RF2040S-SS-SRP		25.40	7.92	7.95	1.5	12.0	3.97	9.65	17.9	19.3	15.88	7.8 (7.2)	0.66	—
RF2050S-SRP	RF2050S-LMC-SRP	RF2050S-SS-SRP		31.75	10.16	9.53	2.0	15.0	5.09	11.9	21.6	23.2	19.05	9.4 (8.7)	1.03	—
RF2060S-SRP	RF2060S-LMC-SRP	RF2060S-SS-SRP	S	38.10	11.91	12.70	3.2	17.2	5.96	16.95	29.65	32.05	22.23	12.6 (11.7)	1.80	—
RF2080S-SRP	RF2080S-LMC-SRP	RF2080S-SS-SRP		50.80	15.88	15.88	4.0	23.0	7.94	20.95	36.65	39.65	28.58	15.8 (14.9)	3.12	—
RF2100S-SRP	—	RF2100S-SS-SRP		63.50	19.05	19.05	4.8 〈5.0〉	28.6	9.54	24.5 〈24.9〉	44.2 〈45.1〉	47.3 〈47.8〉	39.69	19.0	4.77 〈4.89〉	—
RF2040R-SRPL	RF2040R-LMC-SRPL	RF2040R-SS-SRPL		25.40	15.88	7.95	1.5	12.0	3.97	9.65	23.1	24.5	23.0	13.0 (7.2)	1.24	0.89
RF2050R-SRPL	RF2050R-LMC-SRPL	RF2050R-SS-SRPL	R	31.75	19.05	9.53	2.0	15.0	5.09	11.9	25.3	27.0	27.0	13.0 (8.7)	1.70	1.23
RF2060R-SRPL	RF2060R-LMC-SRPL	RF2060R-SS-SRPL		38.10	22.23	12.70	3.2	17.2	5.96	16.95	29.65	32.05	30.0	12.6 (11.7)	2.64	1.93

Size, Roller Type, Series, Outboard Roller Type			Roller Type	Pitch P	Roller Dia. R	Width Between Inner Link Plates W	Plate		Pin				Outboard Roller		Approx. Mass kg/m
Steel Outboard Roller															
Standard	Lambda	SS					Thickness T	Width H	Dia. D	L_1	L_2	L_3	DS	HS	
RF2040S-SR	RF2040S-LMC-SR	RF2040S-SS-SR		25.40	7.92	7.95	1.5	12.0	3.97	9.65	17.9	19.3	15.88	7.8 (7.2)	1.02
RF2050S-SR	RF2050S-LMC-SR	RF2050S-SS-SR		31.75	10.16	9.53	2.0	15.0	5.09	11.9	21.6	23.2	19.05	9.4 (8.7)	1.53
RF2060S-SR	RF2060S-LMC-SR	RF2060S-SS-SR	S	38.10	11.91	12.70	3.2	17.2	5.96	16.95	29.65	32.05	22.23	12.6 (11.7)	2.56
RF2080S-SR	RF2080S-LMC-SR	RF2080S-SS-SR		50.80	15.88	15.88	4.0	23.0	7.94	20.95	36.65	39.65	28.58	15.8 (14.9)	4.30
RF2100S-SR	—	RF2100S-SS-SR		63.50	19.05	19.05	4.8 〈5.0〉	28.6	9.54	24.5 〈24.9〉	44.2 〈45.1〉	47.3 〈47.8〉	39.69	19.0	7.00 〈7.12〉
RF2040R-SRL	RF2040R-LMC-SRL	RF2040R-SS-SRL		25.40	15.88	7.95	1.5	12.0	3.97	9.65	23.1	24.5	23.0	13.0 (7.2)	—
RF2050R-SRL	RF2050R-LMC-SRL	RF2050R-SS-SRL	R	31.75	19.05	9.53	2.0	15.0	5.09	11.9	25.3	27.0	27.0	13.0 (8.7)	—
RF2060R-SRL	RF2060R-LMC-SRL	RF2060R-SS-SRL		38.10	22.23	12.70	3.2	17.2	5.96	16.95	29.65	32.05	30.0	12.6 (11.7)	—

Note: 1. The mass given in the above table assumes that outboard rollers are installed on every link in a staggered installation (as illustrated above in the diagram on the left) or on every second link in a crosswise installation (as illustrated above in the diagram on the right).
2. Even if the chain with steel outboard rollers is LMC chain, the outboard rollers need to be lubricated. Lambda rollers require no lubrication.
3. Figures inside 〈 〉 are for stainless steel chain and figures inside ( ) are for Lambda rollers.
4. Contact a Tsubaki representative regarding pin lengths (L_1, L_2, L_3) for base chains that use R or plastic R rollers.
5. All connecting links use cotter pins.
6. The above dimensions are nominal dimensions and may differ from actual dimensions.

Chain with Brake

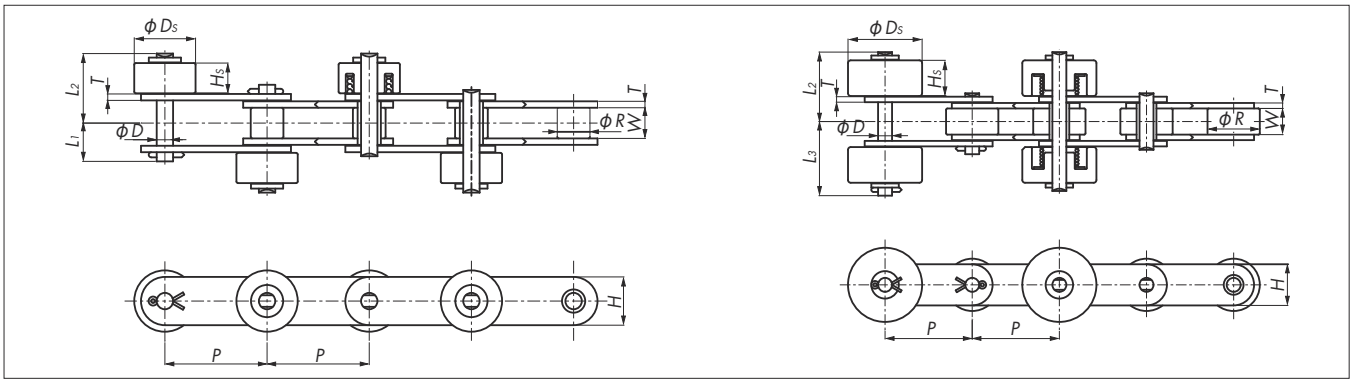

Size, Roller Type, Series, Outboard Roller Type			Roller Type	Pitch P	Roller Dia. R	Width Between Inner Link Plates W	Plate		Pin				Outboard Roller		Approx. Mass kg/m
Plastic Outboard Roller							Thickness T	Width H	Dia. D	L_1	L_2	L_3	D_s	H_s	
Standard	Lambda	SS													
RF2040S-SRPB	RF2040S-LMC-SRPB	RF2040S-SS-SRPB	S	25.40	7.92	7.95	1.5	12.0	3.97	9.65	19.3	19.3	15.88	7.8	1.02
RF2050S-SRPB	RF2050S-LMC-SRPB	RF2050S-SS-SRPB		31.75	10.16	9.53	2.0	15.0	5.09	11.90	21.3	23.3	19.05	9.4	1.53
RF2060S-SRPB	RF2060S-LMC-SRPB	RF2060S-SS-SRPB		38.10	11.91	12.70	3.2	17.2	5.96	16.95	31.05	31.05	22.23	12.6	2.56
RF2040R-SRPBL	RF2040R-LMC-SRPBL	RF2040R-SS-SRPBL	R	25.40	15.88	7.95	1.5	12.0	3.97	9.65	24.5	24.5	23.0	13.0	–
RF2050R-SRPBL	RF2050R-LMC-SRPBL	RF2050R-SS-SRPBL		31.75	19.05	9.53	2.0	15.0	5.09	11.90	26.9	26.9	27.0	13.0	–
RF2060R-SRPBL	RF2060R-LMC-SRPBL	RF2060R-SS-SRPBL		38.10	22.23	12.70	3.2	17.2	5.96	16.95	31.05	31.05	30.0	12.6	–

Note: 1. The mass given in the above table assumes that outboard rollers are installed on every link in a staggered installation (as illustrated above in the diagram on the left) or on every second link in a crosswise installation (as illustrated above in the diagram on the right).
2. If using an electro-conductive roller, the brake is a spring brake with chain number SRPBE.
3. All connecting links use cotter pins.
4. The dimensional drawing is of an electro-conductive type (spring brake). Chains with plastic brakes have the same structure as those with no brakes.
5. The above dimensions are nominal dimensions and may differ from actual dimensions.

Chain with Tab Guide Attachments

Tab guide attachments are installed to prevent meandering on a longer conveyor. Please use caution so as to avoid contact between the tab guide attachments and the hub of the sprocket. Please specify the installation spacing of outboard rollers and tab guide attachments.

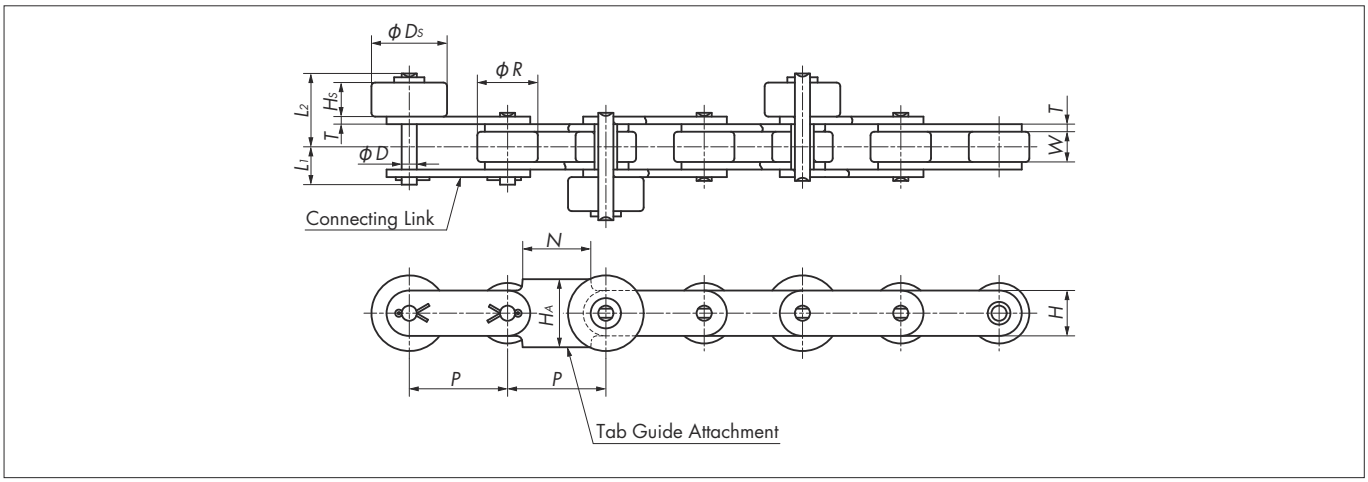

Size, Roller Type, Outboard Roller Type	Pitch P	Roller Dia. R	Width Between Inner Link Plates W	Plate		Pin			Outboard Roller		N	HA	Approx. Mass kg/m	
				Width H	Thickness T	Dia. D	L_1	L_2	D_s	H_s			Plastic Outboard Roller	Steel Outboard Roller
RF2040R-SRL	25.40	15.88	7.95	12.0	1.5	3.97	9.65	23.1	23	13.0	16.5	19.0	–	–
RF2050R-SRL	31.75	19.05	9.53	15.0	2.0	5.09	11.9	25.3	27	13.0	20.0	24.0	1.50	2.22
RF2060R-SRL	38.10	22.23	12.70	17.2	3.2	5.96	16.95	29.65	30	12.6	25.4	27.0	2.41	3.16

Note: 1. The mass given in the above table assumes that outboard rollers are installed on every link in a staggered installation or on every second link in a crosswise installation.
2. All connecting links use cotter pins.
3. The above dimensions are nominal dimensions and may differ from actual dimensions.

RS Chain with Outboard Rollers

Chain No. p.105-106 | p.140 | p.104 | p.141-

Staggered Installation

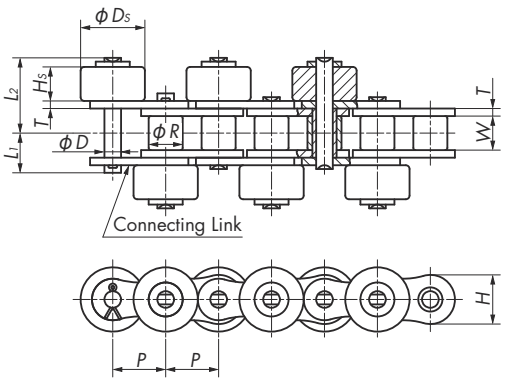

Crosswise Installation

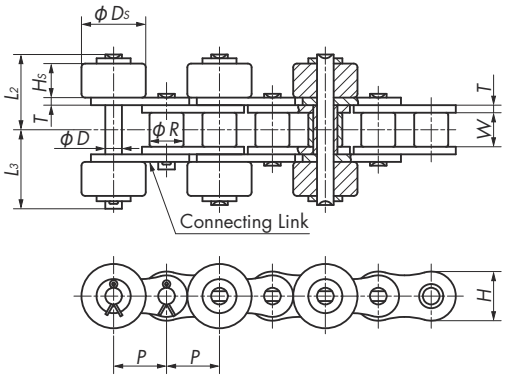

Chain without Brake

Size & Outboard Roller Type			Pitch P	Roller Dia. R	Width Between Inner Link Plates W	Plate		Pin				Outboard Roller		Approx. Mass kg/m
Plastic Outboard Roller														
Standard	Lambda	SS				Thickness T	Width H	Dia. D	L_1	L_2	L_3	D_S	H_S	
RS40-SRP	RS40-LMC-SRP	RS40-SS-SRP	12.70	7.92	7.95	1.5	12.0	3.97	9.65	17.9	19.3	15.88	7.8	0.94
RS50-SRP	RS50-LMC-SRP	RS50-SS-SRP	15.875	10.16	9.53	2.0	15.0	5.09	11.9	21.6	23.2	19.05	9.4	1.42
RS60-SRP	RS60-LMC-SRP	RS60-SS-SRP	19.05	11.91	12.70	2.4	18.1	5.96	15.25	27.95	30.35	22.23	12.6	2.11
RS80-SRP	RS80-LMC-SRP	RS80-SS-SRP	25.40	15.88	15.88	3.2	24.1	7.94	19.25	35.05	37.95	28.58	15.8	3.57
RS100-SRP	—	RS100-SS-SRP	31.75	19.05	19.05	4.0	30.1	9.54	22.85	42.55	45.65	39.69	19.0	5.56

Size & Outboard Roller Type			Pitch P	Roller Dia. R	Width Between Inner Link Plates W	Plate		Pin				Outboard Roller		Approx. Mass kg/m
Steel Outboard Roller														
Standard	Lambda	SS				Thickness T	Width H	Dia. D	L_1	L_2	L_3	D_S	H_S	
RS40-SR	RS40-LMC-SR	RS40-SS-SR	12.70	7.92	7.95	1.5	12.0	3.97	9.65	17.9	19.3	15.88	7.8 (7.2)	1.67
RS50-SR	RS50-LMC-SR	RS50-SS-SR	15.875	10.16	9.53	2.0	15.0	5.09	11.9	21.6	23.2	19.05	9.4 (8.7)	2.42
RS60-SR	RS60-LMC-SR	RS60-SS-SR	19.05	11.91	12.70	2.4	18.1	5.96	15.25	27.95	30.35	22.23	12.6 (11.7)	3.63
RS80-SR	RS80-LMC-SR	RS80-SS-SR	25.40	15.88	15.88	3.2	24.1	7.94	19.25	35.05	37.95	28.58	15.8 (14.9)	5.92
RS100-SR	—	RS100-SS-SR	31.75	19.05	19.05	4.0	30.1	9.54	22.85	42.55	45.65	39.69	19.0	10.02

Note: 1. The mass given in the above table assumes that outboard rollers are installed on every link in a staggered installation (as illustrated above in the diagram on the left) or on every second link in a crosswise installation (as illustrated above in the diagram on the right).
2. Even if the chain with steel outboard rollers is Lambda chain, the outboard rollers need to be lubricated. Lambda rollers require no lubrication.
3. Figures inside ( ) are for Lambda rollers.
4. All connecting links use cotter pins.
5. The construction of the spring brake is the same as for Double Pitch Chain.
6. The above dimensions are nominal dimensions and may differ from actual dimensions.

Chain with Brake

Size & Outboard Roller Type			Pitch P	Roller Dia. R	Width Between Inner Link Plates W	Plate		Pin				Outboard Roller		Approx. Mass kg/m
Plastic Outboard Roller														
Standard	Lambda	SS				Thickness T	Width H	Dia. D	L_1	L_2	L_3	D_S	H_S	
RS40-SRPB	RS40-LMC-SRPB	RS40-SS-SRPB	12.70	7.92	7.95	1.5	12.0	3.97	9.65	17.9	19.3	15.88	7.8	0.94
RS50-SRPB	RS50-LMC-SRPB	RS50-SS-SRPB	15.875	10.16	9.53	2.0	15.0	5.09	11.9	21.6	23.2	19.05	9.4	1.42
RS60-SRPB	RS60-LMC-SRPB	RS60-SS-SRPB	19.05	11.91	12.70	2.4	18.1	5.96	15.25	27.95	30.35	22.23	12.6	2.11

Note: 1. The mass given in the above table assumes that outboard rollers are installed on every link in a staggered installation (as illustrated above in the diagram on the left) or on every second link in a crosswise installation (as illustrated above in the diagram on the right).
2. If using an electro-conductive roller, the brake is a spring brake with chain number SRPBE.
3. All connecting links use cotter pins.
4. The construction of the spring brake is the same as for Double Pitch Chain.
5. The above dimensions are nominal dimensions and may differ from actual dimensions.

Poly Steel Chain with Plastic Outboard Rollers

Chain No. p.105-106 | p.140 | p.104 | p.141-

Staggered Installation

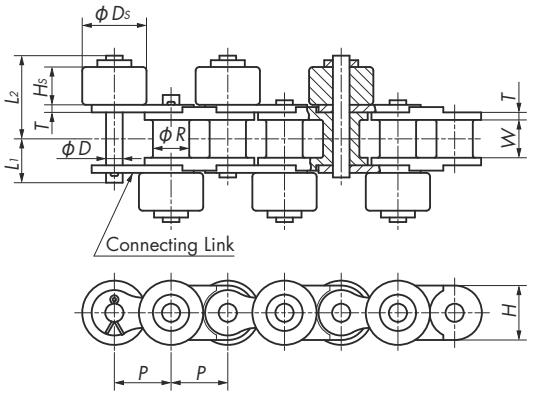

Crosswise Installation

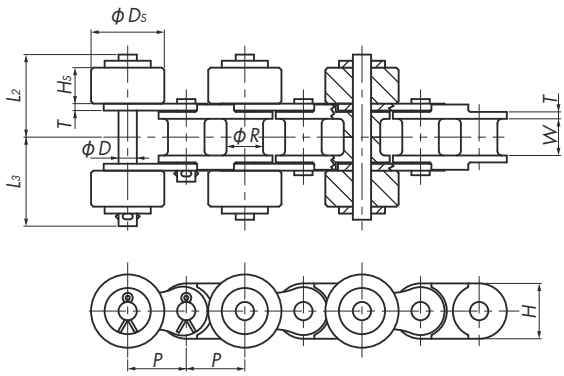

Size, Series, Outboard Roller Type	Pitch *P*	Roller Dia. *R*	Width Between Inner Link Plates *W*	Plate		Pin				Outboard Roller		Approx. Mass kg/m
				Thickness *T*	Width *H*	Dia. D	L_1	L_2	L_3	L_3	H_S	
RS40-PC-SRP	12.70	7.92	7.95	1.5	12.0	3.97	9.65	17.9	19.3	15.88	7.8	0.69
RS50-PC-SRP	15.875	10.16	9.53	2.0	15.0	5.09	11.9	21.6	23.2	19.05	9.4	0.96
RS60-PC-SRP	19.05	11.91	12.70	2.4	18.1	5.96	15.25	27.95	30.35	22.23	12.6	1.40

Note: 1. Since offset links are not available, use a chain with an even number of links.
2. The mass given in the above table assumes that outboard rollers are installed as illustrated above.
3. All connecting links use cotter pins.
4. The above dimensions are nominal dimensions and may differ from actual dimensions.

Top Roller Chain

Top Roller Chain is a Free Flow Chain on which the plate of a Double Pitch or RS Roller Chain is extended upward and a free-running top roller is installed on the plate.

Construction

■ Double Pitch Chain with Top Rollers

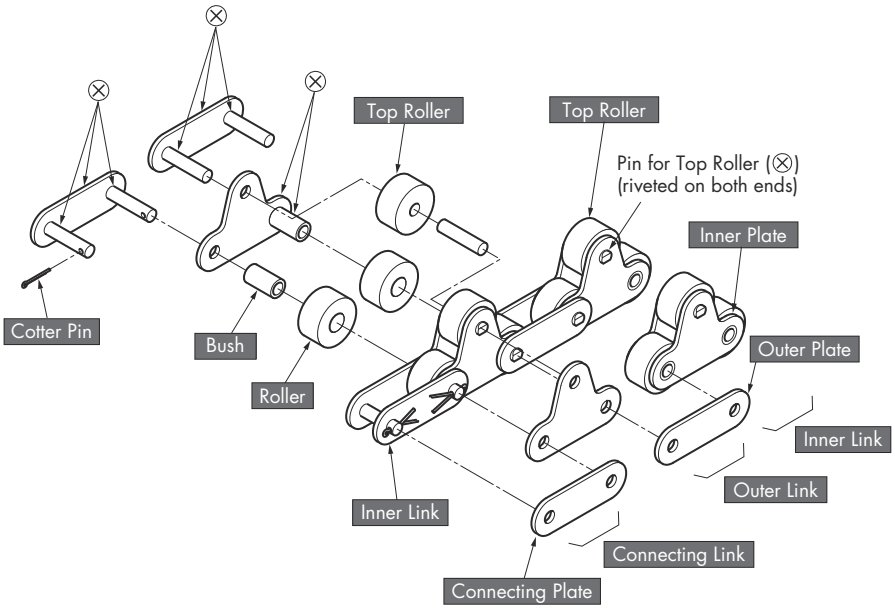

■ RS Chain with Top Rollers

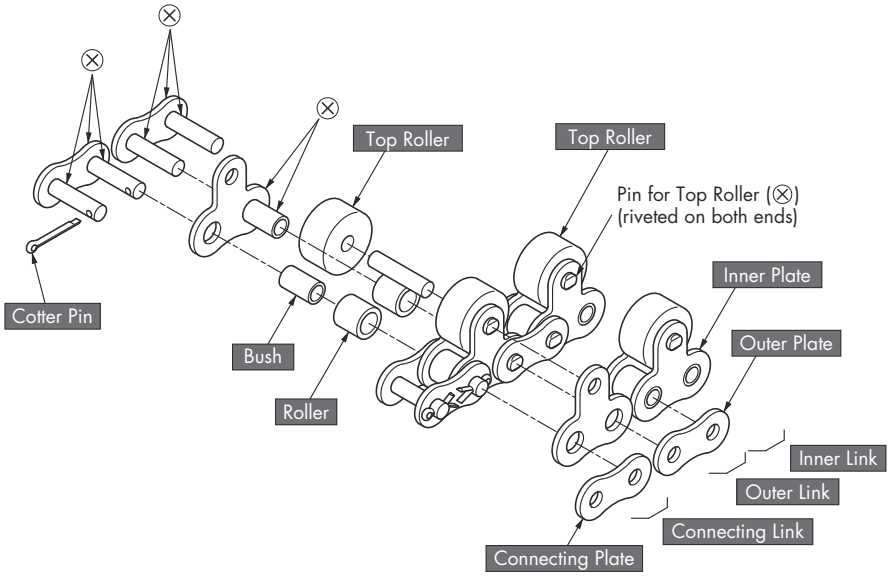

Parts marked with ⊗ are press fit. Other parts are slip fit.

Features

1) The width of the chain is smaller than that of other types of Free Flow Chain.
2) With top rollers supported by plates on both sides, this chain is suitable for use with rugged free-flow conveyors.

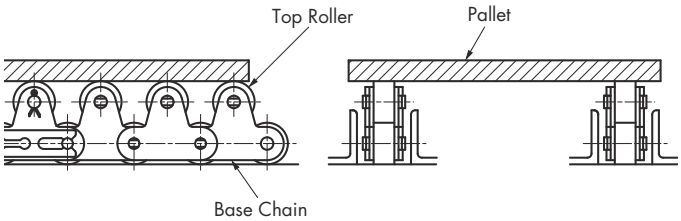

Base Chain and Roller Combinations

Base Chain			Plastic Top Roller		Steel Top Roller	
Size	Roller Type	Series	Plastic Roller	KV Roller	Steel Roller (Stainless Steel Roller*2)	Lambda Roller
RF2040	S	Standard*3	○		○	○
		LMC*1	○		○	○
		LMCNP*1	○		○	○
		SS	○	○	○	
	R	Standard*3	○		○	○
		LMC*1	○		○	○
		LMCNP*1	○		○	○
		SS	○		○	
	RP	LMC*1	○		○	○
		LMCNP*1	○		○	○
		SS	○		○	
RF2050	S	Standard*3	○		○	○
		LMC*1	○		○	○
		LMCNP*1	○		○	○
		SS	○	○	○	
	R	Standard*3	○		○	○
		LMC*1	○		○	○
		LMCNP*1	○		○	○
		SS	○		○	
	RP	LMC*1	○		○	○
		LMCNP*1	○		○	○
		SS	○		○	
RF2060	S	Standard*3	○		○	○
		LMC*1	○		○	○
		LMCNP*1	○		○	○
		SS	○	○	○	
	R	Standard*3	○		○	○
		LMC*1	○		○	○
		LMCNP*1	○		○	○
		SS	○		○	
	RP	LMC*1	○		○	○
		LMCNP*1	○		○	○
		SS	○		○	
RF2080	S	Standard	○		○	
		LMC*1	○		○	○
		LMCNP*1	○		○	○
		SS	○		○	
	R	Standard	○		○	
		LMC*1	○		○	○
		LMCNP*1	○		○	○
		SS	○		○	
	RP	LMC*1	○		○	○
		LMCNP*1	○		○	○
		SS	○		○	
RF2100	S	Standard	○		○	
		LMC*1	○		○	
		LMCNP*1	○		○	
		SS	○		○	
	R	Standard	○		○	
		LMC*1	○		○	
		LMCNP*1	○		○	
		SS	○		○	
	RP	LMC*1	○		○	
		LMCNP*1	○		○	
		SS	○		○	
RS40	–	Standard*3	○	○	○	○
		LMC*1	○		○	○
RS50	–	Standard*3	○	○	○	○
		LMC*1	○		○	○
RS60	–	Standard*3	○	○	○	○
		LMC*1	○		○	○
RS80	–	Standard	○		○	
		LMC*1	○		○	○
RS100	–	Standard	○		○	
		LMC*1	○		○	

Note: 1. "Base chain" refers to all parts of the chain, except the top rollers.
2. *1: Even if the base chain is Lambda chain, the steel top rollers need to be lubricated.
3. *2: When the base chain is an SS chain, the rollers are stainless steel.
4. *3: If the steel top rollers are Lambda rollers, the entire chain needs to be lubricated.

Top Roller Chain

Base Chain Specifications

1. Standard

Base chain is available with steel rollers (R, S) or plastic R rollers.

1) Steel Roller Chain

(1) All parts are made of heat-treated steel.
(2) Operating temperature range: –10˚C to 150˚C
(3) Lubrication required.

2) Plastic R Roller Chain

(1) The R roller on the base chain is made of engineering plastic.
(2) Features of engineering plastic R roller chain
① Lightweight (30% weight reduction compared with steel roller chain)
② Low noise (5 to 7 dB noise reduction compared with steel roller chain)
③ Lower running resistance (30% less resistance compared with steel roller chain)
④ Color of engineering plastic roller: White
⑤ Operating temperature range: –10˚C to 80˚C
⑥ Lubrication is required between the pins and the bushes.

2. Lambda (lube free)

(1) The bushes on the base chain are special oil-impregnated sintered bushes and can be used with no lubrication. (Lubrication is required on steel top rollers.)
(2) The allowable tension of Lambda chain is the same as that of standard chain. The inner and outer plates are treated with a black oxide finish for identification.
(3) Operating temperature range: –10˚C to 150˚C
(4) Do not use the chain in environments where it will come into contact with chemicals or water, or in cleansing and degreasing environments.

3. SS (stainless steel)

SS chain is available with stainless steel rollers (R, S) or plastic R rollers.

1) Stainless Steel Roller Chain

(1) All parts are made of 18-8 stainless steel.
(2) Operating temperature range: –20˚C to 400˚C
(3) Lubrication required.

2) Plastic R Roller Chain (available only for Double Pitch Chain)

(1) The R roller of the base chain is made of engineering plastic.
(2) Features of plastic R roller chain
① Lightweight (30% weight reduction compared with steel roller chain)
② Low noise (5 to 7 dB noise reduction compared with steel roller chain)
③ Lower running resistance (30% less resistance compared with steel roller chain)
④ Color of engineering plastic roller: White
⑤ Operating temperature range: –20˚C to 80˚C
⑥ Lubrication is required between the pins and the bushes.

4. NP

This chain is treated with nickel plating.

⚠ Safety Precautions (for NP Chain)

Do not use NP chain if it will come in direct contact with food or where coating flakes or wear dust can contaminate food. Also, in non-food applications, appropriately cover the chain or contact a Tsubaki representative about chain selection if using in environments where coating flakes or wear dust present problems. Though nickel is not subject to the Japan Food Sanitation Act or the Industrial Safety and Health Act, plating on sliding parts can peel.

Top Roller Specifications

Roller Category		Roller Type	Material	Operating Temp. Range	Description
Engineering plastic roller	Plastic roller	TRP(S)	Polyacetal (white)	–20°C to 80°C	
	KV roller	TRPKV(S)	Super engineering plastic (black)	–20°C to 180°C	Offers superb heat, chemical, and flame resistance, and conforms to the Japan Food Sanitation Act. In general, base chain is SS. (For RF2060 or smaller)

Note: (S) indicates RS chain with top rollers when top rollers are installed on every link.

Roller Category		Roller Type	Material	Operating Temp. Range	Description
Steel roller	Steel roller	TR(S)	Hardened steel	–10°C to 150°C	Lubrication required
	Stainless steel roller	TR(S)	18-8 stainless steel	–20°C to 400°C	Requires additional lubrication when base chain is SS.
	Lambda roller	TRLM(S)	Hardened steel	–10°C to 150°C	Can be used lube-free. Also available with brakes. (For RS80/ RF2080 or smaller)

Lambda Rollers

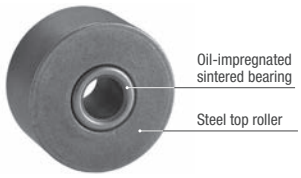

Lambda Rollers feature an oil-impregnated sintered bearing inserted into a steel top roller. These rollers can be used without lubrication. They can minimize the unusual noise that would otherwise occur if using unlubricated top rollers.
A roughly 10 dB reduction in noise can be expected compared to steel rollers (based on Tsubaki in-house tests).

Watch a video showing the difference in noise.

Sprockets

■ Sprockets for Double Pitch Chain with Top Rollers

If the base chain roller is an R roller, a standard sprocket for Double Pitch Chain (R roller) cannot be used since the tooth end of the sprocket comes in contact with the top roller. In this case, use the sprocket for Top Roller Chain shown on page 135.
If the base chain roller is an S roller, a standard sprocket for RF Double Pitch Chain (S roller) can be used as is. RS Roller Chain sprockets can only be used if they are the S roller type and when the number of the teeth is 30 or more.

Basic Structure of Model Numbers

◆ Model numbering example: Double pitch chain with top rollers

RF2040 S - LMC - 1L TRP + 160L - JR - T

① ② ③ ⑤ ⑥ ⑦ ⑧ ⑨

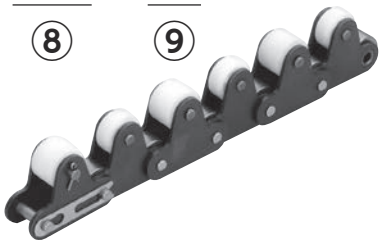

◆ Model numbering example: Double pitch chain with top rollers
(when top rollers are installed on each even-numbered outer link)

RF2060 S - 2L TR + 80L - JR

① ② ⑤ ⑥ ⑦ ⑧

◆ Double pitch chain with top rollers
(when top rollers are installed on each even-numbered inner link)

RF2060 S - 2L TRRL + 80L - JR

① ② ⑤ ⑥ ⑦ ⑧

◆ Model numbering example: RS chain with top rollers

RS40 - LMC - 1L TRPS + 320L - JR - T

① ③ ⑤ ⑥ ⑦ ⑧ ⑨

◆ Model numbering example: RS chain with double-strand top rollers

RS60 - 2 - 1L TRPS + 160L - JR

① ④ ⑤ ⑥ ⑦ ⑧

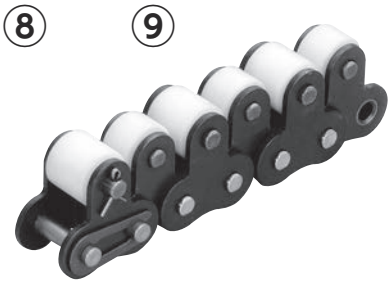

◆ Model numbering example: Connecting link

RS40 - TRP - JL

① ⑥ ⑩

Please use the Tsubaki Power Transmission Products Information Site to generate model numbers.

Tsubaki Power Transmission Products Information Site **Search**

① Size	Indicates chain size.	
② Roller type of base chain	Indicates the type of roller of the base chain. **S** : S roller · **R** : R roller · **RP** : Plastic R roller	See page 11
③ Series	Indicates base chain specifications. Blank : Standard **NP** : Nickel-plated **LMC** : Lambda **LMCNP** : Nickel-plated Lambda **SS** : Stainless steel	See page 113
④ Number of strands	Indicates the chain is a double-strand chain.	
⑤ Top roller spacing	Indicates the spacing between the top rollers.	
⑥ Top roller type	Indicates the type of top roller. **TR**(**S**) : Steel roller (when base chain is stainless steel, so are the rollers) **TRP**(**S**) : Plastic roller · **TRLM**(**S**) : Lambda roller · **TRPKV**(**S**) : KV roller Note: 1. (S) indicates RS chain with top rollers when top rollers are installed on every link. 2. When top rollers are installed on each even-numbered link. Installed on inner link : **TRRL** Installed on outer link : **TR**	See page 113
⑦ Number of links	Specify the number of links. Chains are configured in standard-length units (3 meters), plus (if necessary) one fractional length having the number of links needed to make up the total chain length.	
⑧ End link	Indicates the configuration of the chain ends.	See page 18
⑨ Options	Indicates options available for meeting special user requirements.	See page 18
⑩ Part name	**JL** : Connecting link	

Double Pitch Chain with Top Rollers

Base Chain S Roller

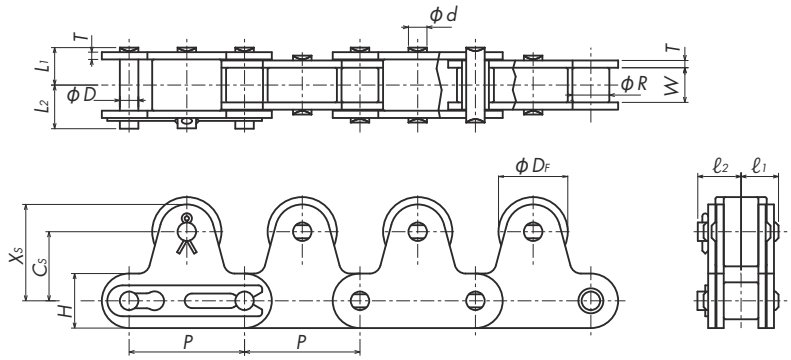

Base Chain R Roller

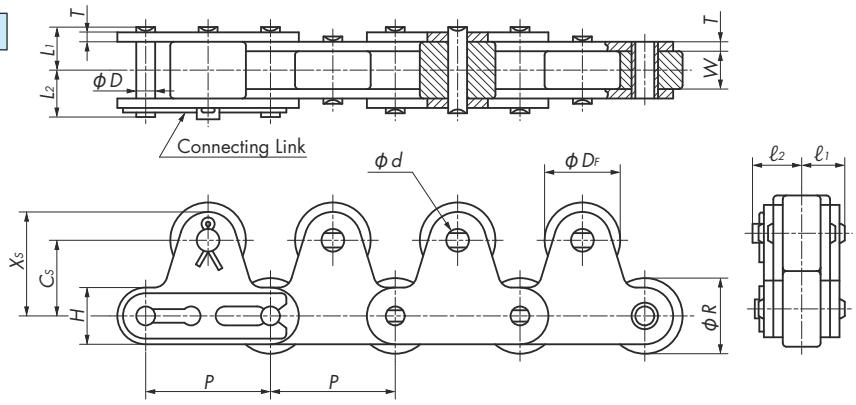

Size, Roller Type, Series, Top Roller Type			Pitch P	Width Between Inner Link Plates W	Roller Dia. R		Pin			Plate		Top Roller						Approx. Mass kg/m		
Plastic Top Roller																				
Standard	LMC	SS			S Roller	R Roller	Dia. D	L_1	L_2	Width H	Thickness T	D_F	C_S	X_S	ℓ_1	ℓ_2	d	S Roller	R Roller	Plastic R Roller
RF2040S-TRP	RF2040S-LMC-TRP	RF2040S-SS-TRP	25.40	7.95	7.92	15.88	3.97	8.25	9.95	12.0	1.5	15.88	15.0	21.0	8.25	9.65	3.97	0.91	–	–
RF2050S-TRP	RF2050S-LMC-TRP	RF2050S-SS-TRP	31.75	9.53	10.16	19.05	5.09	10.3	12.0	15.0	2.0	19.05	19.0	26.5	10.3	11.9	5.09	1.44	–	–
RF2060S-TRP	RF2060S-LMC-TRP	RF2060S-SS-TRP	38.10	12.70	11.91	22.23	5.96	14.55	16.55	17.2	3.2	22.23	23.0	31.6	14.55	16.95	5.96	2.77	–	–
RF2080S-TRP	RF2080S-LMC-TRP	RF2080S-SS-TRP	50.80	15.88	15.88	28.58	7.94	18.3	20.9	23.0	4.0	28.58	29.0	40.5	18.5	21.3	11.32	4.29	–	–
RF2100S-TRP	RF2100S-LMC-TRP	RF2100S-SS-TRP	63.50	19.05	19.05	39.69	9.54	21.8 〈22.3〉	24.5 〈24.9〉	28.6	4.8 〈5.0〉	39.69	35.4	49.7	22.1	27.2	14.52	6.51 〈6.63〉	–	–
RF2040R-TRP	RF2040R-LMC-TRP	RF2040R-SS-TRP	25.40	7.95	7.92	15.88	3.97	8.25	9.95	12.0	1.5	15.88	15.0	21.0	8.25	9.65	3.97	–	1.27	0.92
RF2050R-TRP	RF2050R-LMC-TRP	RF2050R-SS-TRP	31.75	9.53	10.16	19.05	5.09	10.3	12.0	15.0	2.0	19.05	19.0	26.5	10.3	11.9	5.09	–	1.90	1.43
RF2060R-TRP	RF2060R-LMC-TRP	RF2060R-SS-TRP	38.10	12.70	11.91	22.23	5.96	14.55	16.55	17.2	3.2	22.23	23.0	31.6	14.55	16.95	5.96	–	3.46	2.75
RF2080R-TRP	RF2080R-LMC-TRP	RF2080R-SS-TRP	50.80	15.88	15.88	28.58	7.94	18.3	20.9	23.0	4.0	28.58	29.0	40.5	18.5	21.3	11.32	–	5.40	4.52
RF2100R-TRP	RF2100R-LMC-TRP	RF2100R-SS-TRP	63.50	19.05	19.05	39.69	9.54	21.8 〈22.3〉	24.5 〈24.9〉	28.6	4.8 〈5.0〉	39.69	35.4	49.7	22.1	27.2	14.52	–	8.77 〈8.89〉	6.60 〈6.72〉

Size, Roller Type, Series, Top Roller Type			Pitch P	Width Between Inner Link Plates W	Roller Dia. R		Pin			Plate		Top Roller						Approx. Mass kg/m	
Steel Top Roller																			
Standard	LMC	SS			S Roller	R Roller	Dia. D	L_1	L_2	Width H	Thickness T	D_F	C_S	X_S	ℓ_1	ℓ_2	d	S Roller	R Roller
RF2040S-TR	RF2040S-LMC-TR	RF2040S-SS-TR	25.40	7.95	7.92	15.88	3.97	8.25	9.95	12.0	1.5	15.88	15.0	21.0	8.25	9.65	3.97	1.33	–
RF2050S-TR	RF2050S-LMC-TR	RF2050S-SS-TR	31.75	9.53	10.16	19.05	5.09	10.3	12.0	15.0	2.0	19.05	19.0	26.5	10.3	11.9	5.09	2.04	–
RF2060S-TR	RF2060S-LMC-TR	RF2060S-SS-TR	38.10	12.70	11.91	22.23	5.96	14.55	16.55	17.2	3.2	22.23	23.0	31.6	14.55	16.95	5.96	3.68	–
RF2080S-TR	RF2080S-LMC-TR	RF2080S-SS-TR	50.80	15.88	15.88	28.58	7.94	18.3	20.9	23.0	4.0	28.58	29.0	40.5	18.5	21.3	11.32	5.65	–
RF2100S-TR	RF2100S-LMC-TR	RF2100S-SS-TR	63.50	19.05	19.05	39.69	9.54	21.8 〈22.3〉	24.5 〈24.9〉	28.6	4.8 〈5.0〉	39.69	35.4	49.7	22.1	27.2	14.52	9.11 〈9.23〉	–
RF2040R-TR	RF2040R-LMC-TR	RF2040R-SS-TR	25.40	7.95	7.92	15.88	3.97	8.25	9.95	12.0	1.5	15.88	15.0	21.0	8.25	9.65	3.97	–	1.69
RF2050R-TR	RF2050R-LMC-TR	RF2050R-SS-TR	31.75	9.53	10.16	19.05	5.09	10.3	12.0	15.0	2.0	19.05	19.0	26.5	10.3	11.9	5.09	–	2.50
RF2060R-TR	RF2060R-LMC-TR	RF2060R-SS-TR	38.10	12.70	11.91	22.23	5.96	14.55	16.55	17.2	3.2	22.23	23.0	31.6	14.55	16.95	5.96	–	4.36
RF2080R-TR	RF2080R-LMC-TR	RF2080R-SS-TR	50.80	15.88	15.88	28.58	7.94	18.3	20.9	23.0	4.0	28.58	29.0	40.5	18.5	21.3	11.32	–	6.76
RF2100R-TR	RF2100R-LMC-TR	RF2100R-SS-TR	63.50	19.05	19.05	39.69	9.54	21.8 〈22.3〉	24.5 〈24.9〉	28.6	4.8 〈5.0〉	39.69	35.4	49.7	22.1	27.2	14.52	–	11.37 〈11.49〉

Note: 1. Figures inside 〈 〉 are for stainless steel chain.
2. Even if the chain with steel top rollers is LMC chain, the top rollers need to be lubricated. Lambda rollers require no lubrication.
3. The above dimensions are nominal dimensions and may differ from actual dimensions.

■ Double Pitch Chain with Topple Prevention Attachments

Special attachments are installed on a long conveyor so as to prevent toppling and meandering of the conveyor. Please use caution so as to avoid contact between these attachments and the hub of the sprocket. Please specify the installation spacing of the top rollers and attachments (four links or more).

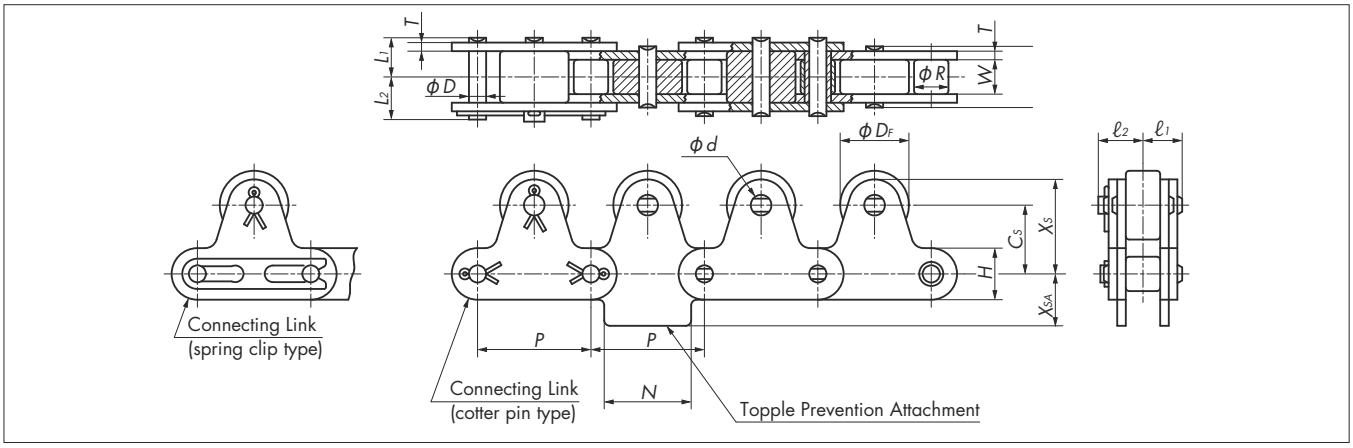

Size & Top Roller Type	Pitch P	Width Between Inner Link Plates W	Roller Dia. R		Pin			Plate		Top Roller & Attachment							
			S Roller	R Roller	Dia. D	L_1	L_2	Width H	Thickness T	D_F	C_S	X_S	ℓ_1	ℓ_2	d	N	X_{SA}
RF2040-TR	25.40	7.95	7.92	15.88	3.97	8.25	9.95	12.0	1.5	15.88	15.0	21.0	8.25	9.65	3.97	19.1	12.7
RF2050-TR	31.75	9.53	10.16	19.05	5.09	10.3	12.0	15.0	2.0	19.05	19.0	26.5	10.3	11.9	5.09	23.8	15.9
RF2060-TR	38.10	12.70	11.91	22.23	5.96	14.55	16.55	17.2	3.2	22.23	23.0	31.6	14.55	16.95	5.96	28.6	19.1
RF2080-TR	50.80	15.88	15.88	28.58	7.94	18.3	20.9	23.0	4.0	28.58	29.0	40.5	18.5	21.3	11.32	38.1	25.4
RF2100-TR	63.50	19.05	19.05	39.69	9.54	21.8	24.5	28.6	4.8	39.69	35.4	49.7	22.1	27.2	14.52	47.6	31.8

Note: 1. Sprockets for base chains with R or plastic R rollers are made-to-order.
2. Topple prevention attachments are installed on the inner links.
3. The above dimensions are nominal dimensions and may differ from actual dimensions.

■ Double Pitch Chain with Double-Strand Top Rollers

This chain allows a larger conveying capacity than single-strand Top Roller Chain.

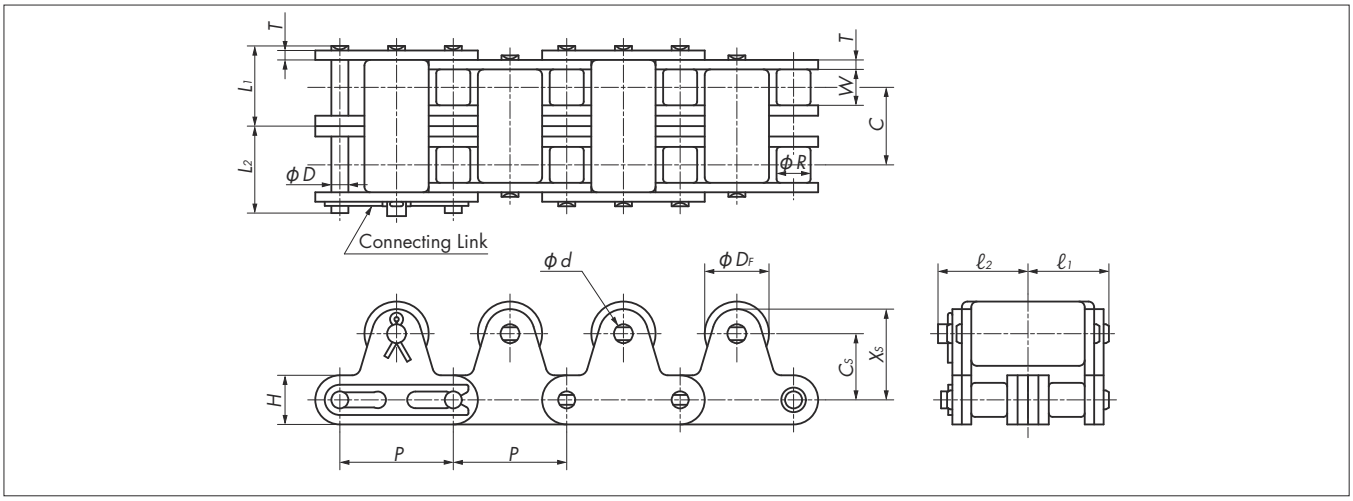

Size, No. of Strands, Top Roller Type	Pitch P	Width Between Inner Link Plates W	Transverse Pitch C	Roller Dia. R		Pin			Plate		Top Roller					
				S Roller	R Roller	Dia. D	L_1	L_2	Width H	Thickness T	D_F	C_S	X_S	ℓ_1	ℓ_2	d
RF2040-2-TR	25.40	7.95	14.4	7.92	15.88	3.97	15.45	17.15	12.0	1.5	15.88	15.0	21.0	15.45	16.95	3.97
RF2050-2-TR	31.75	9.53	18.1	10.16	19.05	5.09	19.35	21.15	15.0	2.0	19.05	19.0	26.5	19.35	21.15	5.09
RF2060-2-TR	38.10	12.70	26.2	11.91	22.23	5.96	27.7	29.6	17.2	3.2	22.23	23.0	31.6	27.7	30.1	5.96
RF2080-2-TR	50.80	15.88	32.6	15.88	28.58	7.94	34.6	37.2	23.0	4.0	28.58	29.0	40.5	34.6	37.6	11.32
RF2100-2-TR	63.50	19.05	39.1	19.05	39.69	9.54	41.4	44.1	28.6	4.8	39.69	35.4	49.7	41.65	46.75	14.52

Note: 1. When the base chain uses an S roller, RF2040 and RF2050 can use RS sprockets having 30 or more teeth. On a chain size of RF2060 or larger, the dimension C is different from that of RS standard sprockets. Consequently, special sprockets are needed for these chain sizes.
2. Special sprockets are required for base chains with R or plastic R rollers.
3. The above dimensions are nominal dimensions and may differ from actual dimensions.

RS Chain with Top Rollers

Top Rollers Installed on Every Second Link

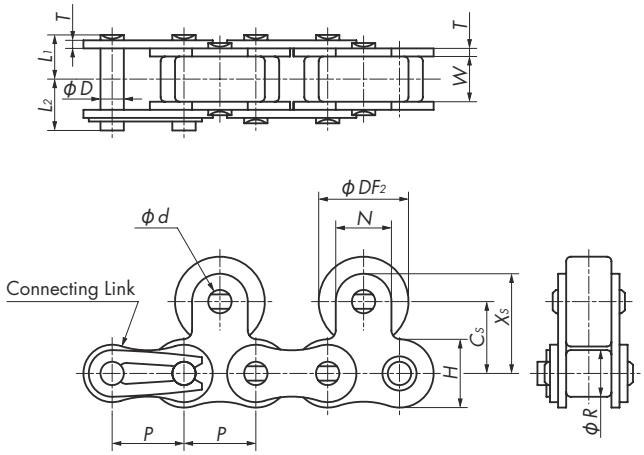

Top Rollers Installed on Every Link

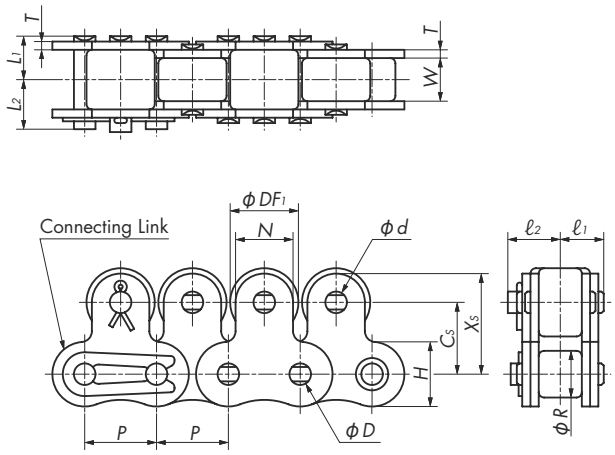

Size, Series, Top Roller Type			Pitch P	Width Between Inner Link Plates W	Base Chain Roller Dia. R	Pin			Plate		Top Roller								Approx. Mass kg/m	
Plastic Top Roller																				
Standard	Lambda	SS				Dia. D	L_1	L_2	Width H	Thickness T	DF_1	DF_2	CS	N	XS	ℓ_1	ℓ_2	d	On Every Link	On Every 2nd Link
RS40-TRP	RS40-LMC-TRP	RS40-SS-TRP	12.70	7.95	7.92	3.97	8.25	9.95	12.0	1.5	11.0	15.88	12.7	9.5	17.45	8.25	9.65	3.97	0.92	0.85
RS50-TRP	RS50-LMC-TRP	RS50-SS-TRP	15.875	9.53	10.16	5.09	10.3	12.0	15.0	2.0	15.0	19.05	15.9	12.7	22.25	10.3	11.9	5.09	1.56	1.38
RS60-TRP	RS60-LMC-TRP	RS60-SS-TRP	19.05	12.70	11.91	5.96	12.85	14.75	18.1	2.4	18.0	22.23	18.3	15.9	26.25	12.85	15.25	5.96	2.30	2.03
RS80-TRP	RS80-LMC-TRP	RS80-SS-TRP	25.40	15.88	15.88	7.94	16.25	19.25	24.1	3.2	24.0	28.58	24.6	19.1	34.15	16.25	19.25	7.94	3.90	3.44
RS100-TRP	RS100-LMC-TRP	RS100-SS-TRP	31.75	19.05	19.05	9.54	19.75	22.85	30.1	4.0	30.0	39.69	31.8	25.4	44.5	19.75	22.85	9.54	6.06	5.41

Size, Series, Top Roller Type			Pitch P	Width Between Inner Link Plates W	Base Chain Roller Dia. R	Pin			Plate		Top Roller								Approx. Mass kg/m	
Steel Top Roller																				
Standard	Lambda	SS				Dia. D	L_1	L_2	Width H	Thickness T	DF_1	DF_2	CS	N	XS	ℓ_1	ℓ_2	d	On Every Link	On Every 2nd Link
RS40-TR	RS40-LMC-TR	RS40-SS-TR	12.70	7.95	7.92	3.97	8.25	9.95	12.0	1.5	11.0	15.88	12.7	9.5	17.45	8.25	9.65	3.97	1.83	1.41
RS50-TR	RS50-LMC-TR	RS50-SS-TR	15.875	9.53	10.16	5.09	10.3	12.0	15.0	2.0	15.0	19.05	15.9	12.7	22.25	10.3	11.9	5.09	2.39	2.18
RS60-TR	RS60-LMC-TR	RS60-SS-TR	19.05	12.70	11.91	5.96	12.85	14.75	18.1	2.4	18.0	22.23	18.3	15.9	26.25	12.85	15.25	5.96	3.60	3.18
RS80-TR	RS80-LMC-TR	RS80-SS-TR	25.40	15.88	15.88	7.94	16.25	19.25	24.1	3.2	24.0	28.58	24.6	19.1	34.15	16.25	19.25	7.94	6.09	5.27
RS100-TR	RS100-LMC-TR	RS100-SS-TR	31.75	19.05	19.05	9.54	19.75	22.85	30.1	4.0	30.0	39.69	31.8	25.4	44.5	19.75	22.85	9.54	9.30	8.85

Note: 1. "On Every Link" and "On Every 2nd Link" described in the "Approx. Mass" column refer to the spacing for the installation of the top rollers.
2. Offset links are not available on RS chain with top rollers when the top rollers are installed on every link or on every second link (outer links).
3. Even if the chain with steel top rollers is LMC chain, the top rollers need to be lubricated. Lambda rollers require no lubrication.
4. When top rollers are installed on every link, the top roller type is designated as TRPS (plastic top roller) or TRS (steel top roller).
5. The above dimensions are nominal dimensions and may differ from actual dimensions.

■ RS Chain with Topple Prevention Attachments

Special attachments are installed on a long conveyor so as to prevent toppling and meandering of the conveyor. Please use caution so as to avoid contact between these attachments and the hub of the sprocket. Please specify the installation spacing of the top rollers and attachments (four links or more).

Installation of Top Rollers: Outer Link

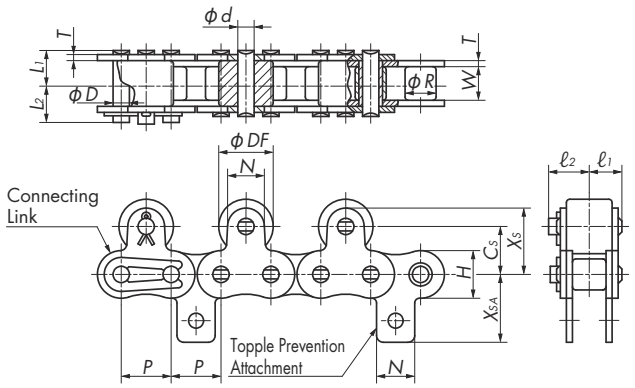

Installation of Top Rollers: Inner Link

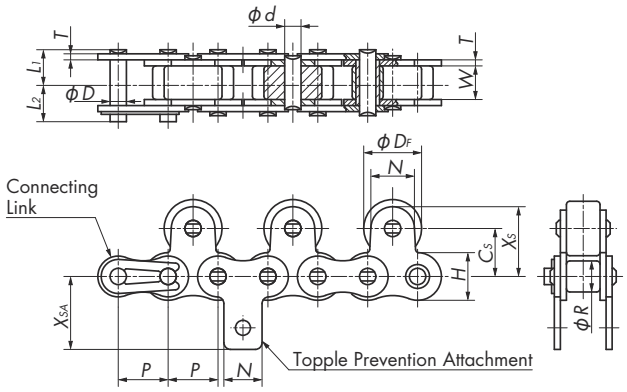

Size & Top Roller Type	Pitch P	Width Between Inner Link Plates W	Roller Dia. R	Pin			Plate		Top Roller & Attachment							
				Dia. D	L_1	L_2	Width H	Thickness T	D_F	C_S	N	X_S	ℓ_1	ℓ_2	d	X_{SA}
RS40-TR	12.70	7.95	7.92	3.97	8.25	9.95	12.0	1.5	15.88	12.7	9.5	17.45	8.25	9.65	3.97	17.4
RS50-TR	15.875	9.53	10.16	5.09	10.3	12.0	15.0	2.0	19.05	15.9	12.7	22.25	10.3	11.9	5.09	23.05
RS60-TR	19.05	12.70	11.91	5.96	12.85	14.75	18.1	2.4	22.23	18.3	15.9	26.25	12.85	15.25	5.96	26.85
RS80-TR	25.40	15.88	15.88	7.94	16.25	19.25	24.1	3.2	28.58	24.6	19.1	34.15	16.25	19.25	7.94	35.45
RS100-TR	31.75	19.05	19.05	9.54	19.75	22.85	30.1	4.0	39.69	31.8	25.4	44.5	19.75	22.85	9.54	44.0

Note: 1. When top rollers are installed on the outer links, topple prevention attachments are fitted on the inner links. When top rollers are installed on the inner links, topple prevention attachments are fitted on the outer links.
2. When top rollers are installed on every link, topple prevention attachments are fitted on the inner links.
3. The above dimensions are nominal dimensions and may differ from actual dimensions.

■ RS Chain with Double-Strand Top Rollers

This chain allows a larger conveying capacity than single-strand Top Roller Chain.

Installation of Top Rollers: Outer Link

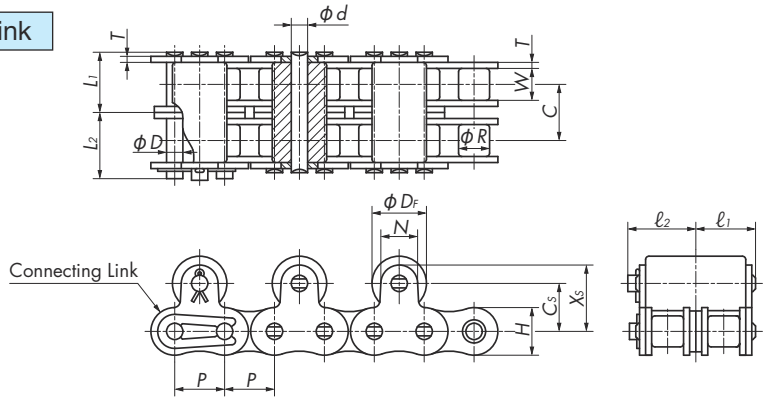

Size, No. of Strands, Top Roller Type	Pitch P	Width Between Inner Link Plates W	Roller Dia. R	Transverse Pitch C	Pin			Plate		Top Roller						
					Dia. D	L_1	L_2	Width H	Thickness T	D_F	C_S	N	X_S	ℓ_1	ℓ_2	d
RS40-2-TR	12.70	7.95	7.92	14.4	3.97	15.45	17.15	12.0	1.5	15.88	12.7	9.5	17.45	15.45	16.95	3.97
RS50-2-TR	15.875	9.53	10.16	18.1	5.09	19.35	21.15	15.0	2.0	19.05	15.9	12.7	22.25	19.35	21.15	5.09
RS60-2-TR	19.05	12.70	11.91	22.8	5.96	24.25	26.25	18.1	2.4	22.23	18.3	15.9	26.25	24.25	26.75	5.96
RS80-2-TR	25.40	15.88	15.88	29.3	7.94	30.9	33.9	24.1	3.2	28.58	24.6	19.1	34.15	30.9	33.9	7.94
RS100-2-TR	31.75	19.05	19.05	35.8	9.54	37.7	40.8	30.1	4.0	39.69	31.8	25.4	44.5	37.7	40.8	9.54

Note: 1. Dimension *DF* changes when top rollers are installed on every link.
2. RS standard sprockets (double-strand) can be used.
3. When a top roller is installed on each even-numbered link, the top roller is installed on the outer link unless otherwise specified.
4. The above dimensions are nominal dimensions and may differ from actual dimensions.

Sprockets

Applicable Sprockets

Chain			Sprocket
Double Pitch Chain	S rollers		Use double pitch sprockets. Use RS sprockets when the number of sprocket teeth is 30 or more.
	R rollers		Use double pitch sprockets.
RS Attachment Chain			Use RS sprockets.
BS Attachment Chain			Use BS sprockets.
Stainless Steel Double Pitch Chain	S rollers		Use stainless steel double pitch sprockets. Use stainless steel RS sprockets when the number of sprocket teeth is 30 or more.
	R rollers		Use stainless steel double pitch sprockets.
Stainless Steel RS Attachment Chain			Use stainless steel RS sprockets.
2-Strand Double Pitch Chain	S rollers		For RF2040 and RF2050 chains, use RS sprockets for 2-strand chain having 30 or more teeth. Sizes RF2060 or above require dedicated sprockets. Contact a Tsubaki representative for details.
	R rollers		Dedicated sprockets are required. Contact a Tsubaki representative for details.
2-Strand RS Attachment Chain			Use RS sprockets for 2-strand chain.
Free Flow Chain	Double Plus Chain		Use dedicated sprockets.
	Center Roller Chain		
	Outboard Roller Chain		Use double pitch sprockets. If the base chain roller is an S roller, use RS sprockets when the number of sprocket teeth is 30 or more.
	Outboard Roller RS Chain		Use dedicated sprockets.
	Double Pitch Top Roller Chain	S rollers	Use double pitch sprockets. Use RS sprockets when the number of sprocket teeth is 30 or more.
		R rollers	Use dedicated sprockets.
	Top Roller RS Chain		Use RS sprockets.
Bearing Bush Chain			Use double pitch sprockets for R rollers.
Mini Tact Chain			Use dedicated sprockets.
Indexing Table Chain			Use dedicated sprockets.

*1: These are made to order. Contact a Tsubaki representative for details.

Shaft Bore Specifications

Choose from the shaft bore specifications below when mounting a sprocket onto the shaft.

Series	Sprocket		Specifications
Fit Bore	Double pitch sprockets Sprockets for Double Plus chain RS sprockets		Codes are provided for different types of bore finishing, allowing precise orders to be placed with just the model number. The products can be used as-is right after delivery. Two types of machining options are available: shaft bore machining, keyway machining, and tapped hole drilling, or bore machining for mounting bearings (BR type).
Lock Sprockets	Double pitch sprockets	S rollers	The sprocket is firmly locked to the shaft by the frictional force of the tapered sleeve. Easy mounting, removal, and phase alignment. Note: For RS sprockets, please refer to the *Tsubaki Drive Chains & Sprockets* catalog.
		R rollers	
	RS sprockets		

	Series					See page
	Steel in standard specs	Steel with hardened teeth	Stainless steel in standard specs	Stainless steel with hardened teeth	Engineering plastic	
	●	●	●	●	●	121
	●	●	●	●		122
	●	●	●	●	●	125
	●	●				128
			●	●	●	121
			●	●		122
			●	●	●	131
	*1	*1				129
	*1	*1				–
	●	●				129
	●	●	*1			139
	●	●				121
		●				140
	●	●				121
	●					139
	●	●				125
	●	●				122
						84
						86

	Series					See page
	Steel in standard specs	Steel with hardened teeth	Stainless steel in standard specs	Stainless steel with hardened teeth	Engineering plastic	
	●	●	● Note: Excluding Double Plus chain.			135
	●					123
	●					124
	●	●				–

Double Pitch Sprockets

Double Pitch Sprockets (for S Rollers): Steel, Stainless Steel, Engineering Plastic

These are sprockets for Double Pitch chains.

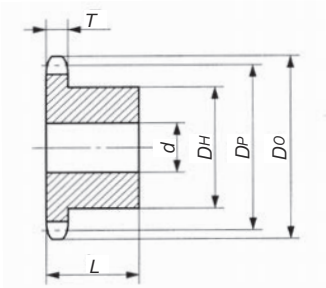

Model Numbering Example

RF2040S -1B 912T -SS

- Size/Roller type
- No. of strands/Hub type
- No. of effective teeth: 912T=9½T (10T is written as "1000T")
- Series
  - [Blank]: Steel
  - Q : Hardened teeth
  - SS : Stainless steel
  - SST : Wear-resistant stainless steel
  - P : Engineering plastic

Usage Conditions of Engineering Plastic Sprockets

1. Operating temperature range: –10°C to 60°C
2. Allowable chain speed: 70 m/min or less (under non-lubricated conditions)
   Can be used up to 150 m/min under oil-lubricated conditions or when pre-lubed.
3. Refer to page 159 "Corrosion Resistance Guide for Corrosion Resistant Chains and Sprockets" for the foods and chemicals that can be conveyed.

Standard Sprocket	Corrosion Resistant Sprocket		No. of Effective Teeth	No. of Actual Teeth	Pitch Circle Dia. D_P	Outer Dia. D_O	Tooth Width T	Bore Dia. d		Hub			Approx. Mass (kg)	
Steel	Stainless Steel	Engineering Plastic						Pilot Bore	Max.	Dia. D_H		Length L		
Model No.	Model No.	Model No.								Steel/ Stainless Steel	Engineering Plastic		Steel/ Stainless Steel	Engineering Plastic
RF2040S–1B912T	RF2040S–1B912T–SS	RF2040S–1B912T–P	9 ½	19	78.23	84	7.3	12.7	38	60	60	25	0.6	0.09
RF2040S–1B1012T	RF2040S–1B1012T–SS	RF2040S–1B1012T–P	10 ½	21	86.17	92	7.3	12.7	46	69	69	25	0.8	0.12
RF2040S–1B1112T	RF2040S–1B1112T–SS	RF2040S–1B1112T–P	11 ½	23	94.14	100	7.3	12.7	50	77	77	25	1.0	0.15
RF2040S–1B1200T	RF2040S–1B1200T–SS		12	24	98.14	104	7.3	12.7	42	63		25	0.8	
RF2040S–1B1212T	RF2040S–1B1212T–SS	RF2040S–1B1212T–P	12 ½	25	102.14	108	7.3	12.7	42	63	80	25	0.8	0.16
RF2050S–1B912T	RF2050S–1B912T–SS	RF2050S–1B912T–P	9 ½	19	97.78	105	8.9	15.9	48	73	75	28	1.1	0.16
RF2050S–1B1012T	RF2050S–1B1012T–SS	RF2050S–1B1012T–P	10 ½	21	107.72	115	8.9	15.9	48	73	85	28	1.2	0.21
RF2050S–1B1112T	RF2050S–1B1112T–SS	RF2050S–1B1112T–P	11 ½	23	117.68	125	8.9	15.9	48	73	90	28	1.3	0.24
RF2050S–1B1200T	RF2050S–1B1200T–SS		12	24	122.67	130	8.9	15.9	48	73		28	1.3	
RF2050S–1B1212T	RF2050S–1B1212T–SS	RF2050S–1B1212T–P	12 ½	25	127.67	135	8.9	15.9	48	73	100	28	1.4	0.29
RF2060S–1B912T	RF2060S–1B912T–SS	RF2060S–1B912T–P	9 ½	19	117.34	126	11.9	15.9	55	83	85	40	2.0	0.31
RF2060S–1B1012T	RF2060S–1B1012T–SS	RF2060S–1B1012T–P	10 ½	21	129.26	138	11.9	15.9	55	83	95	40	2.3	0.39
RF2060S–1B1112T	RF2060S–1B1112T–SS	RF2060S–1B1112T–P	11 ½	23	141.22	150	11.9	18	55	83	100	45	2.7	0.49
RF2060S–1B1200T	RF2060S–1B1200T–SS		12	24	147.21	156	11.9	18	55	83		45	2.8	
RF2060S–1B1212T	RF2060S–1B1212T–SS	RF2060S–1B1212T–P	12 ½	25	153.20	162	11.9	18	55	83	120	45	2.9	0.66
RF2080S–1B912T	RF2080S–1B912T–SS		9 ½	19	156.45	167	15	23	63	93		40	3.3	
RF2080S–1B1012T	RF2080S–1B1012T–SS		10 ½	21	172.35	184	15	23	63	93		40	3.7	
RF2080S–1B1112T	RF2080S–1B1112T–SS		11 ½	23	188.29	200	15	28	75	107		45	4.9	
RF2080S–1B1200T	RF2080S–1B1200T–SS		12	24	196.28	208	15	28	75	107		45	5.2	
RF2080S–1B1212T	RF2080S–1B1212T–SS		12 ½	25	204.27	216	15	28	75	107		45	5.5	
RF2100S–1B912T	RF2100S–1B912T–SS		9 ½	19	195.57	209	18	28	75	107		50	5.9	
RF2120S–1B912T	RF2120S–1B912T–SS		9 ½	19	234.68	251	24	33	80	117		63	10.5	
RF2160S–1B912T	RF2160S–1B912T–SS		9 ½	19	312.90	335	30	33	103	147		71	22.0	

Note: 1. Models in shaded areas are made-to-order. All other models are stocked.
2. Material: Standard sprockets are machine structural carbon steel. Teeth are unhardened on all models.
Corrosion resistant sprockets are stainless steel.
Engineering plastic corrosion resistant sprockets are special-grade MC901 nylon.

Double Pitch Sprockets (for R Rollers): Steel, Stainless Steel

These are sprockets for Double Pitch chains.

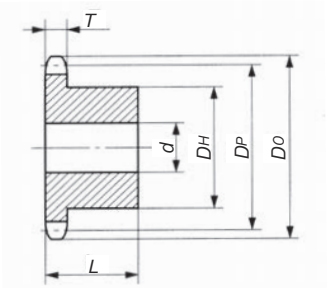

Model Numbering Example

RF2050R -1B 1100T -SS

Size/Roller type
No. of strands/Hub type
No. of effective teeth: 1100T=11T

Series
[Blank]: Steel
Q : Hardened teeth
SS : Stainless steel
SST : Wear-resistant stainless steel

Standard Sprocket	Corrosion Resistant Sprocket	No. of Effective Teeth	Pitch Circle Dia. D_P	Outer Dia. D_O	Tooth Width T	Bore Dia. d		Hub		Approx. Mass (kg)
Steel	Stainless Steel					Pilot Bore	Max.	Dia. D_H	Length L	
Model No.	Model No.									
RF2040R–1B1000T	RF2040R–1B1000T–SS	10	82.20	93	7.3	12.7	32	52	25	0.5
RF2040R–1B1100T	RF2040R–1B1100T–SS	11	90.16	102	7.3	12.7	42	63	25	0.7
RF2040R–1B1200T	RF2040R–1B1200T–SS	12	98.14	110	7.3	12.7	42	63	25	0.8
RF2040R–1B1300T	RF2040R–1B1300T–SS	13	106.14	118	7.3	12.7	42	63	25	0.9
RF2040R–1B1400T	RF2040R–1B1400T–SS	14	114.15	127	7.3	12.7	42	63	25	0.9
RF2040R–1B1500T	RF2040R–1B1500T–SS	15	122.17	135	7.3	15.9	45	68	28	1.2
RF2040R–1B1600T	RF2040R–1B1600T–SS	16	130.20	143	7.3	15.9	45	68	28	1.2
RF2050R–1B1000T	RF2050R–1B1000T–SS	10	102.75	117	8.9	15.9	48	73	28	1.1
RF2050R–1B1100T	RF2050R–1B1100T–SS	11	112.70	127	8.9	15.9	48	73	28	1.2
RF2050R–1B1200T	RF2050R–1B1200T–SS	12	122.67	138	8.9	18	48	73	28	1.3
RF2050R–1B1300T	RF2050R–1B1300T–SS	13	132.67	148	8.9	18	48	73	28	1.4
RF2050R–1B1400T	RF2050R–1B1400T–SS	14	142.68	158	8.9	18	48	73	28	1.6
RF2050R–1B1500T	RF2050R–1B1500T–SS	15	152.71	168	8.9	18	48	73	28	1.7
RF2050R–1B1600T	RF2050R–1B1600T–SS	16	162.75	179	8.9	18	48	73	28	1.9
RF2060R–1B1000T	RF2060R–1B1000T–SS	10	123.29	140	11.9	18	55	83	45	2.3
RF2060R–1B1100T	RF2060R–1B1100T–SS	11	135.23	153	11.9	18	55	83	45	2.5
RF2060R–1B1200T	RF2060R–1B1200T–SS	12	147.21	165	11.9	18	55	83	45	2.8
RF2060R–1B1300T	RF2060R–1B1300T–SS	13	159.20	177	11.9	18	55	83	45	3.0
RF2060R–1B1400T	RF2060R–1B1400T–SS	14	171.22	190	11.9	18	55	83	45	3.3
RF2060R–1B1500T	RF2060R–1B1500T–SS	15	183.25	202	11.9	18	55	83	45	3.6
RF2060R–1B1600T	RF2060R–1B1600T–SS	16	195.29	214	11.9	18	55	83	45	3.9
RF2080R–1B1000T	RF2080R–1B1000T–SS	10	164.39	187	15	28	75	107	45	4.2
RF2080R–1B1100T	RF2080R–1B1100T–SS	11	180.31	203	15	28	75	107	45	4.7
RF2080R–1B1200T	RF2080R–1B1200T–SS	12	196.28	220	15	28	75	107	45	5.2
RF2080R–1B1300T	RF2080R–1B1300T–SS	13	212.27	237	15	28	75	107	45	5.8
RF2080R–1B1400T	RF2080R–1B1400T–SS	14	228.29	253	15	28	75	107	45	6.4
RF2080R–1B1500T	RF2080R–1B1500T–SS	15	244.33	269	15	28	75	107	45	7.1
RF2080R–1B1600T	RF2080R–1B1600T–SS	16	260.39	286	15	28	75	107	45	7.8
RF2100R–1B1100T		11	225.39	254	18	33	80	117	56	7.8
RF2120R–1B1100T		11	270.47	305	24	45	80	130	80	14.7
RF2180R–1B1100T		11	360.63	407	30	70	115	170	125	35.5

Note: 1. Models in shaded areas are made-to-order. All other models are stocked.
2. Material: Standard sprockets are machine structural carbon steel. Teeth are unhardened on all models.
Corrosion resistant sprockets are stainless steel.

Double Pitch Sprockets

Double Pitch S Type Lock Sprockets (for S Rollers)

Configuration A

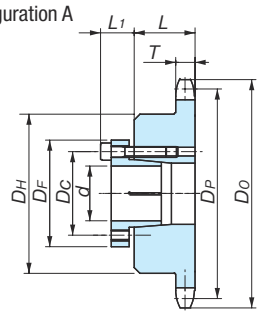

Configuration B

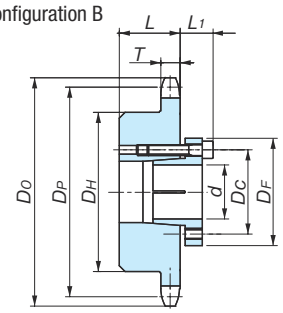

◆ S Type Lock Sleeve Dimensions

Sleeve Model No.	D_F	D_C	L_1	Bolt Size (M×S)	Tightening Torque (N·m)
S1	32.0	24.0	12.0	M4×16	4.2
S2	42.0	32.0	14.0	M5×18	8.3
S3	48.5	38.5	15.5	M5×20	8.3
S4	56.0	46.0	15.5	M5×20	8.3
S5	66.0	56.0	17.5	M5×22	8.3
S6	80.0	68.0	21.0	M6×25	16.8
S7	101.0	86.0	24.5	M8×30	40.5

See page 14 for more information and notes on use.

Model Numbering Example

RF2040S -1B 912T -S2 5 18 A

- Size/Roller type
- No. of strands/Hub type
- No. of effective teeth: 912T=9½T (10T is written as "1000T")
- Sleeve model no.
- No. of mounting bolts
- Shaft bore dia.
- Configuration A or B

Ordering Example

Chain no.: RF2040S
No. of effective teeth: 9 1/2 Configuration: A
Shaft bore: 15 mm

Model Number
RF2040S-1B912T-S2515A

◆ Double Pitch S Roller Shaft Bore Dimensions and Sleeve Models

RF2040S

No. of Effective Teeth	Tooth Width T	PCD Dp	Outer Dia. Do	Hub Dia. D_H	Hub Length L	Shaft Bore Dia. d	15	16	17	18	19	20	22	24	25	28	30	32	35	38	40	42	45
						Max. Allowable Torque (N·m)	174	186	198	209	221	232	256							442	465	488	523
														223	232	260	279	298	325				
9 ½	7.3	78.23	84	60	25	Applicable Sleeve Model No./ Dimensions	S2(5) D_F=42.0 D_C=32.0 L_1=14.0							S4(4) D_F=56.0 D_C=46.0 L_1=15.5									
10 ½	7.3	86.17	92	69	25															S5(5) D_F=66.0 D_C=56.0 L_1=17.5			
11 ½	7.3	94.14	100	77	25																		
12	7.3	98.14	104	63	25																		
12 ½	7.3	102.14	108	63	25																		

RF2050S

No. of Effective Teeth	Tooth Width T	PCD Dp	Outer Dia. Do	Hub Dia. D_H	Hub Length L	Shaft Bore Dia. d	17	18	19	20	22	24	25	28	30	32	35	38	40	42	45
						Max. Allowable Torque (N·m)	237	251	265	279	307	335	349	391	418	446	488	442	465	488	523
9 ½	8.9	97.78	105	73	28	Applicable Sleeve Model No./ Dimensions	S2(6) D_F=42.0 D_C=32.0 L_1=14.0					S4(6) D_F=56.0 D_C=46.0 L_1=15.5						S5(5) D_F=66.0 D_C=56.0 L_1=17.5			
10 ½	8.9	107.72	115	73	28																
11 ½	8.9	117.68	125	73	28																
12	8.9	122.67	130	73	28																
12 ½	8.9	127.67	135	73	28																

RF2060S

No. of Effective Teeth	Tooth Width T	PCD Dp	Outer Dia. Do	Hub Dia. D_H	Hub Length L	Shaft Bore Dia. d	24	25	28	30	32	35	38	40	42	45	48	50	55
						Max. Allowable Torque (N·m)	446	465	521	558	595	651	883	930	976	1046	1116	1162	1279
9 ½	11.9	117.34	126	83	40	Applicable Sleeve Model No./ Dimensions	S4(8) D_F=56.0 D_C=46.0 L_1=15.5						S5(10) D_F=66.0 D_C=56.0 L_1=17.5				S6(6) D_F=80.0 D_C=68.0 L_1=21.0				
10 ½	11.9	129.26	138	83	40														
11 ½	11.9	141.22	150	83	45														
12	11.9	147.21	156	83	45														
12 ½	11.9	153.20	162	83	45														

RF2080S

No. of Effective Teeth	Tooth Width T	PCD Dp	Outer Dia. Do	Hub Dia. D_H	Hub Length L	Shaft Bore Dia. d	38	40	42	45	48	50	55	60	65	70
						Max. Allowable Torque (N·m)	883	930	976	1046	1116	1162	1279	2140	2319	2497
9 ½	15	156.45	167	93	40	Applicable Sleeve Model No./ Dimensions	S5(10) D_F=66.0 D_C=56.0 L_1=17.5				S6(6) D_F=80.0 D_C=68.0 L_1=21.0					
10 ½	15	172.35	184	93	40											
11 ½	15	188.29	200	107	45									S7(5) D_F=101.0 D_C=86.0 L_1=24.5		
12	15	196.28	208	107	45											
12 ½	15	204.27	216	107	45											

RF2100S

No. of Effective Teeth	Tooth Width T	PCD Dp	Outer Dia. Do	Hub Dia. D_H	Hub Length L	Shaft Bore Dia. d	48	50	55	60	65	70
						Max. Allowable Torque (N·m)	2232	2325	2557	2140	2319	2497
9 ½	18	195.57	209	107	50	Applicable Sleeve Model No./ Dimensions	S6(12) D_F=80.0 D_C=68.0 L_1=21.0			S7(5) D_F=101.0 D_C=86.0 L_1=24.5		

Note: 1. Figures inside ( ) are the number of mounting bolts.
2. From the sleeve model number in the table above, see the bolt size and tightening torque of the corresponding sleeve model in the upper right table on this page.

Double Pitch S Type Lock Sprockets (for R Rollers)

Configuration A

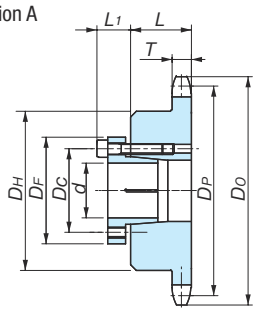

Configuration B

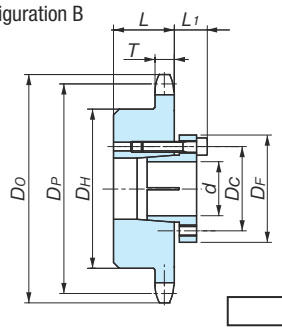

◆ S Type Lock Sleeve Dimensions

Sleeve Model No.	D_F	D_C	L_1	Bolt Size (M×S)	Tightening Torque (N·m)
S1	32.0	24.0	12.0	M4×16	4.2
S2	42.0	32.0	14.0	M5×18	8.3
S3	48.0	38.5	15.5	M5×20	8.3
S4	56.0	46.0	15.5	M5×20	8.3
S5	66.0	56.0	17.5	M5×22	8.3
S6	80.0	68.0	21.0	M6×25	16.8
S7	101.0	86.0	24.5	M8×30	40.5

See page 14 for more information and notes on use.

Model Numbering Example

RF2040R -1B 1000T -S2 5 18 A

- RF2040R: Size/Roller type
- 1B: No. of strands/Hub type
- 1000T: No. of effective teeth: 10T=1000T
- S2: Sleeve model no.
- 5: No. of mounting bolts
- 18: Shaft bore dia.
- A: Configuration A or B

Ordering Example

Chain no.: RF2040R
No. of effective teeth: 10 Configuration: A
Shaft bore: 15 mm

Model Number
RF2040R-1B1000T-S2515A

◆ Double Pitch R Roller Shaft Bore Dimensions and Sleeve Models

RF2040R

No. of Effective Teeth	Tooth Width T	PCD Dp	Outer Dia. Do	Hub Dia. D_H	Hub Length L
10	7.3	82.20	93	52	25
11	7.3	90.16	102	63	25
12	7.3	98.14	110	63	25
13	7.3	106.14	118	63	25
14	7.3	114.15	127	63	25
15	7.3	122.17	135	68	28
16	7.3	130.20	143	68	28

Shaft Bore Dia. d	15	16	17	18	19	20	22	24	25	28	30	32	35
Max. Allowable Torque (N·m)	174	186	198	209	221	232	256	167	174	195			
								223	232	260	279	298	325
Applicable Sleeve Model No./ Dimensions	S2(5) D_F=42.0 D_C=32.0 L_1=14.0							S3(3) D_F=48.5 D_C=38.5 L_1=15.5					
								S4(4) D_F=56.0 D_C=46.0 L_1=15.5					

RF2050R

No. of Effective Teeth	Tooth Width T	PCD Dp	Outer Dia. Do	Hub Dia. D_H	Hub Length L
10	8.9	102.75	117	73	28
11	8.9	112.70	127	73	28
12	8.9	122.67	138	73	28
13	8.9	132.67	148	73	28
14	8.9	142.68	158	73	28
15	8.9	152.71	168	73	28
16	8.9	162.75	179	73	28

Shaft Bore Dia. d	17	18	19	20	22	24	25	28	30	32	35	38	40	42	45
Max. Allowable Torque (N·m)	237	251	265	279	307	446	465	521	558	595	651	442	465	488	523
Applicable Sleeve Model No./ Dimensions	S2(6) D_F=42.0 D_C=32.0 L_1=14.0					S4(8) D_F=56.0 D_C=46.0 L_1=15.5						S5(5) D_F=66.0 D_C=56.0 L_1=17.5			

RF2060R

No. of Effective Teeth	Tooth Width T	PCD Dp	Outer Dia. Do	Hub Dia. D_H	Hub Length L
10	11.9	123.29	140	83	45
11	11.9	135.23	153	83	45
12	11.9	147.21	165	83	45
13	11.9	159.20	177	83	45
14	11.9	171.22	190	83	45
15	11.9	183.25	202	83	45
16	11.9	195.29	214	83	45

Shaft Bore Dia. d	24	25	28	30	32	35	38	40	42	45	48	50	55
Max. Allowable Torque (N·m)	446	465	521	558	595	651	883	930	976	1046	1116	1162	1279
Applicable Sleeve Model No./ Dimensions	S4(8) D_F=56.0 D_C=46.0 L_1=15.5						S5(10) D_F=66.0 D_C=56.0 L_1=17.5				S6(6) D_F=80.0 D_C=68.0 L_1=21.0		

RF2080R

No. of Effective Teeth	Tooth Width T	PCD Dp	Outer Dia. Do	Hub Dia. D_H	Hub Length L
10	15	164.39	187	107	45
11	15	180.31	203	107	45
12	15	196.28	220	107	45
13	15	212.27	237	107	45
14	15	228.29	253	107	45
15	15	244.33	269	107	45
16	15	260.39	286	107	45

Shaft Bore Dia. d	38	40	42	45	48	50	55	60	65	70
Max. Allowable Torque (N·m)	883	930	976	1046	1116	1162	1279	2140	2319	2497
Applicable Sleeve Model No./ Dimensions	S5(10) D_F=66.0 D_C=56.0 L_1=17.5				S6(6) D_F=80.0 D_C=68.0 L_1=21.0			S7(5) D_F=101.0 D_C= 86.0 L_1= 24.5		

RF2100R

No. of Effective Teeth	Tooth Width T	PCD Dp	Outer Dia. Do	Hub Dia. D_H	Hub Length L
11	18	225.39	254	117	56

Shaft Bore Dia. d	48	50	55	60	65	70
Max. Allowable Torque (N·m)	2232	2325	2557	2140	2319	2497
Applicable Sleeve Model No./ Dimensions	S6(12) D_F=80.0 D_C=68.0 L_1=21.0			S7(5) D_F=101.0 D_C= 86.0 L_1= 24.5		

Note: 1. Figures inside ( ) are the number of mounting bolts.
2. From the sleeve model number in the table above, see the bolt size and tightening torque of the corresponding sleeve model in the upper right table on this page.

Sprockets for RS Attachment Chain

RS Sprockets RS25 / BF25-H

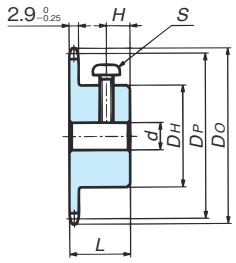

Model Numbering Example

RS25 -1B 10T - 6

Size
No. of strands/Hub type
No. of teeth
Bore dia. *d*

Note: 1. Bores are finished and fitted with a screw.
2. All models stocked.

No. of Teeth	Pitch Circle Dia. D_P	(Outer Dia.) (D_O)	Bore Dia. *d* (H8)	Hub Dia. D_H	Hub Length *L*	Cross-recessed Head Machine Screw Position *H*	Cross-recessed Head Machine Screw *S*	Approx. Mass g	Material
10	20.55	23.5	6・8	13	14	4	M3X6	13	Sintered alloy
11	22.54	25.5	6・8	15	14	4	M3X8	16	
12	24.53	27.5	8・10	17	14	4	M4X8	20	
13	26.53	29.5	8・10	18	14	4	M4X8	23	
14	28.54	31.5	8・10	19	14	4	M4X8	26	
15	30.54	33.5	8・10	20	14	4	M4X10	31	
16	32.55	35.5	8・10	21	16	5	M4X10	38	
17	34.56	37.5	8・10	23	16	5	M4X10	45	
18	36.57	39.5	8・10	25	16	5	M4X12	52	
19	38.58	41.5	8・10	26	16	5	M4X12	60	
20	40.59	43.5	8・10	28	16	5	M4X14	68	
21	42.61	45.5	8・10	30	18	7	M4X14	80	
22	44.62	48.0	8・10	30	18	7	M4X14	84	Machine–structural carbon steel
23	46.63	50.0	8・10	30	18	7	M4X14	88	
24	48.65	52.0	8・10	30	18	7	M4X14	93	
25	50.66	54.0	8・10	30	18	7	M4X14	98	
26	52.68	56.0	10・12	30	18	7	M4X14	98	
28	56.71	60.0	10・12	30	18	7	M4X14	103	
30	60.75	64.0	10・12	30	18	7	M4X14	110	
32	64.78	68.0	10・12	30	18	7	M4X14	117	

RS Sprockets RS35

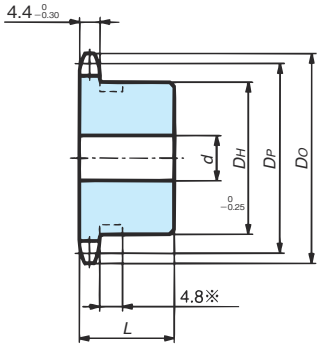

(Mechanically machined)
1B type

Model Numbering Example

RS35 -1B 50T Q

Size
No. of strands/Hub type
No. of teeth
Teeth hardening
Q: Hardened
[Blank]: Unhardened

Note: 1. Maximum bore diameters shown are standard figures. Determine bore diameter and key bearing pressure based on general mechanical design.
2. Models marked with a ※ have a groove around the periphery of the hub. Groove outer diameter is 16 for 9T, 18 for 10T, 22 for 11T, 24 for 12T, and 28 for 13T.
3. Models in shaded areas have hardened teeth.
4. Sprockets with 42 or more teeth do not have hardened teeth, but they can be manufactured with hardened teeth.
5. All models stocked.

No. of Teeth	Pitch Circle Dia. D_P	(Outer Dia.) (D_O)	1B Type: Bore Dia. *d* Pilot Bore	Bore Dia. *d* Max.	Hub Dia. D_H	Hub Length *L*	Approx. Mass kg	Material
9	27.85	32	8	11	22	20	0.05	※
10	30.82	35	8	12	25	20	0.07	※
11	33.81	38	8	14	27	20	0.08	※
12	36.80	41	8	16.5	31	20	0.11	※
13	39.80	44	9.5	18	32	20	0.12	※
14	42.80	47	9.5	16.5	30	20	0.12	Mechanically machined; machine–structural carbon steel
15	45.81	51	9.5	19	35	20	0.16	
16	48.82	54	9.5	20	37	20	0.18	
17	51.84	57	9.5	24	41	20	0.22	
18	54.85	60	9.5	24.5	44	20	0.25	
19	57.87	63	9.5	28.5	47	20	0.29	
20	60.89	66	9.5	30	50	20	0.32	
21	63.91	69	9.5	32	53	20	0.36	
22	66.93	72	9.5	32	53	20	0.37	
23	69.95	75	9.5	32	53	20	0.38	
24	72.97	78	9.5	32	53	22	0.43	
25	76.00	81	12.7	32	53	22	0.43	
26	79.02	84	12.7	32	53	22	0.44	
27	82.05	87	12.7	32	53	22	0.45	
28	85.07	90	12.7	32	53	22	0.47	
30	91.12	96	12.7	32	53	22	0.5	
32	97.18	102	12.7	32	53	22	0.53	
34	103.23	109	12.7	32	53	22	0.56	
35	106.26	112	12.7	32	53	22	0.58	
36	109.29	115	12.7	32	53	22	0.59	
38	115.34	121	13	42	63	25	0.82	
40	121.40	127	13	42	63	25	0.86	
42	127.46	133	13	42	63	25	0.90	
45	136.55	142	13	42	63	25	0.96	
48	145.64	151	13	42	63	25	1.0	
50	151.69	157	13	42	63	25	1.1	
54	163.82	169	13	42	63	25	1.2	
60	182.00	187	13	42	63	25	1.4	
65	197.15	203	16	45	68	25	1.6	
70	212.30	218	16	45	68	25	1.7	
75	227.46	233	16	45	68	25	1.9	

RS Sprockets RS40 to RS80

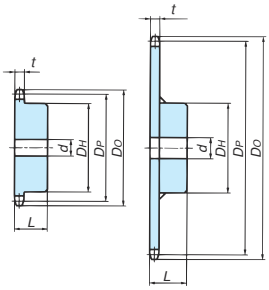

(Mechanically machined) (Welded construction)
1B type

Model Numbering Example

RS40 -1B 50T Q

Size
No. of strands/Hub type
No. of teeth
Teeth hardening
Q: Hardened
[Blank]: Unhardened

No. of Teeth	RS40 (t=7.3) PCD D_P	(Outer Dia.) (D_O)	Shaft Bore Dia. d Pilot Bore	Max.	Hub Dia. D_H	Length L	Approx. Mass kg	Material	RS50 (t=8.9) PCD D_P	(Outer Dia.) (D_O)	Shaft Bore Dia. d Pilot Bore	Max.	Hub Dia. D_H	Length L	Approx. Mass kg	Material	RS60 (t=11.9) PCD D_P	(Outer Dia.) (D_O)	Shaft Bore Dia. d Pilot Bore	Max.	Hub Dia. D_H	Length L	Approx. Mass kg	Material	RS80 (t=15.0) PCD D_P	(Outer Dia.) (D_O)	Shaft Bore Dia. d Pilot Bore	Max.	Hub Dia. D_H	Length L	Approx. Mass kg	Material	No. of Teeth
9	37.13	43	9.5	15	28	22	0.10	※	46.42	53	9.5	19	34	25	0.18	※	55.70	64	9.5	24.5	43	32	0.36	※	74.26	85	15.9	35	58	40	0.79	※	9
10	41.10	47	9.5	16.5	32	22	0.13	※	51.37	58	9.5	22	40	25	0.24	※	61.65	70	12.7	30	49	32	0.45	※	82.20	93	15.9	32	52	40	0.88	Mechanically machined; machine-structural carbon steel	10
11	45.08	51	9.5	20	37	22	0.17	※	56.35	64	12.7	25	46	25	0.30	※	67.62	76	12.7	32	51	32	0.55	※	90.16	102	15.9	38	60	40	1.1		11
12	49.07	55	9.5	22	40	22	0.21	※	61.34	69	12.7	32	51	25	0.37	※	73.60	83	12.7	32	51	32	0.63	Mechanically machined; machine-structural carbon steel	98.14	110	19	45	67	40	1.4		12
13	53.07	59	9.5	20	37	22	0.22		66.33	74	12.7	32	51	25	0.42	※	79.60	89	15.9	35	57	32	0.76		106.14	118	19	50	77	40	1.7		13
14	57.07	63	9.5	24	42	22	0.28		71.34	79	12.7	32	52	25	0.49		85.61	95	15.9	39.5	62	32	0.90		114.15	127	19	50	77	40	1.9		14
15	61.08	67	9.5	28.5	46	22	0.33		76.35	84	12.7	35	57	25	0.58		91.63	101	15.9	45.5	68	32	1.1		122.17	135	19	63	93	40	2.5		15
16	65.10	71	12.7	30	50	22	0.37		81.37	89	12.7	40	62	25	0.68		97.65	107	15.9	47.5	73	32	1.2		130.20	143	19	63	93	40	2.7		16
17	69.12	76	12.7	32	54	22	0.44		86.39	94	12.7	45.5	67	25	0.78		103.67	113	15.9	47.5	73	32	1.3		138.23	151	19	63	93	40	2.8		17
18	73.14	80	12.7	35	57	22	0.49		91.42	100	12.7	47.5	72	28	0.99		109.70	119	15.9	55	83	40	1.9		146.27	159	19	63	93	40	3.0		18
19	77.16	84	12.7	39.5	62	22	0.57		96.45	105	12.7	47.5	73	28	1.1		115.74	126	15.9	55	83	40	2.0		154.32	167	23	63	93	40	3.2		19
20	81.18	88	12.7	45.5	67	25	0.73		101.48	110	12.7	47.5	73	28	1.1		121.78	132	15.9	55	83	40	2.1		162.37	176	23	63	93	40	3.4		20
21	85.21	92	12.7	45.5	71	25	0.82		106.51	115	15.9	47.5	73	28	1.2		127.82	138	15.9	55	83	40	2.2		170.42	184	23	63	93	40	3.7		21
22	89.24	96	12.7	50	75	25	0.91		111.55	120	15.9	47.5	73	28	1.2		133.86	144	15.9	55	83	40	2.3		178.48	192	28	75	107	45	4.7		22
23	93.27	100	12.7	50	77	25	0.98		116.59	125	15.9	47.5	73	28	1.3		139.90	150	18	55	83	40	2.4		186.54	200	28	75	107	45	4.9		23
24	97.30	104	12.7	42	63	25	0.80		121.62	130	15.9	47.5	73	28	1.3		145.95	156	18	55	83	40	2.6		194.60	208	28	75	107	45	5.2		24
25	101.33	108	12.7	42	63	25	0.83		126.66	135	15.9	47.5	73	28	1.4		151.99	162	18	55	83	40	2.7		202.66	216	28	75	107	45	5.5		25
26	105.36	112	12.7	42	63	25	0.87		131.70	140	18	48	73	28	1.5		158.04	168	18	55	83	40	2.8		210.72	224	28	75	107	45	5.8		26
27	109.40	116	12.7	42	63	25	0.91		136.74	145	18	48	73	28	1.5		164.09	174	18	55	83	40	3.0		218.79	233	28	75	107	45	6.1		27
28	113.43	120	12.7	42	63	25	0.95		141.79	150	18	48	73	28	1.6		170.14	181	18	55	83	40	3.1		226.86	241	28	75	107	45	6.4		28
30	121.50	128	12.7	42	63	25	1.0		151.87	161	18	48	73	28	1.8		182.25	193	18	55	83	40	3.4		243.00	257	28	75	107	45	7.1		30
32	129.57	137	16	45	68	28	1.3		161.96	171	18	48	73	28	1.9		194.35	205	18	55	83	40	3.8		259.14	273	28	75	107	45	7.8		32
34	137.64	145	16	45	68	28	1.4		172.05	181	18	48	73	28	2.1		206.46	217	18	55	83	40	4.1		275.28	289	28	75	107	45	8.6		34
35	141.68	149	16	45	68	28	1.4		177.10	186	18	48	73	28	2.2		212.52	223	18	55	83	40	4.3		283.36	297	28	75	107	45	9.0		35
36	145.72	153	16	45	68	28	1.5		182.15	191	23	55	83	35	2.7		218.57	229	18	55	83	40	4.5		291.43	306	33	80	117	50	10.1		36
38	153.79	161	16	45	68	28	1.6		192.24	201	23	55	83	35	2.9		230.69	241	18	55	83	40	4.9		307.58	322	33	80	117	50	11.0		38
40	161.87	169	16	45	68	28	1.7		202.33	211	23	55	83	35	3.2		242.80	253	18	55	83	40	5.3		323.74	338	33	80	117	50	12.0		40
42	169.94	177	18	48	73	32	2.0		212.43	221	23	55	83	35	3.4		254.92	266	23	63	93	45	6.2		339.89	354	33	80	117	50	12.9		42
45	182.06	189	18	48	73	32	2.2		227.58	237	23	55	83	35	3.7		273.09	284	23	63	93	45	6.9		364.12	378	33	80	117	50	14.5		45
48	194.18	201	18	48	73	32	2.4		242.73	252	23	55	83	35	4.1		291.27	302	23	63	93	45	7.6		388.36	403	33	80	117	50	16.1	Note 3	48
50	202.26	209	18	48	73	32	2.5		252.82	262	23	55	83	35	4.4		303.39	314	23	63	93	45	8.2		404.52	419	33	80	117	50	17.3		50
54	218.42	226	18	48	73	32	2.8		273.03	282	23	55	83	35	5.0		327.63	338	23	63	93	45	9.3		436.84	451	33	80	117	50	19.8		54
60	242.66	250	18	48	73	32	3.3		303.33	312	23	55	83	35	5.9		363.99	375	23	63	93	45	11.1		485.33	500	33	80	117	50	23.9		60
65	262.87	270	23	55	83	32	4.0		328.58	338	23	63	93	40	7.3		394.30	405	28	75	107	45	13.2		525.73	540	33	89	127	63	29.3		65
70	283.07	290	23	55	83	32	4.5		353.84	363	23	63	93	40	8.2		424.61	436	28	75	107	45	15.0		566.15	581	33	89	127	63	33.3		70
75	303.28	311	23	55	83	32	5.0		379.10	388	23	63	93	40	9.2		454.92	466	28	75	107	45	16.9		606.56	621	33	89	127	63	37.7		75

Note: 1. Maximum bore diameters shown are standard figures. Determine bore diameter and key bearing pressure based on general mechanical design.
2. Models marked with a ※ have a groove around the periphery of the hub. Refer to the table below for groove outer diameters.
3. Welded construction: Carbon steel for machine structural use (teeth and hub)
4. Models in shaded areas have hardened teeth.
5. Models with unhardened teeth as standard can be manufactured with hardened teeth.
6. All models stocked.
7. The above dimensions are nominal dimensions and may differ from actual dimensions.

◆ Groove around Periphery of Hub

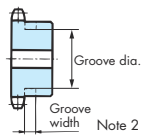

Size		RS40	RS50	RS60	RS80
Groove Width		5.8	6.4	8.0	10.4
No. of Teeth/ Groove Dia.	9T	21	27	32	44
	10T	25	32	37	–
	11T	30	37	45	–
	12T	32	42	–	–
	13T	–	47	–	–

Sprockets for RS Attachment Chain

RS Sprockets RS100 to RS160

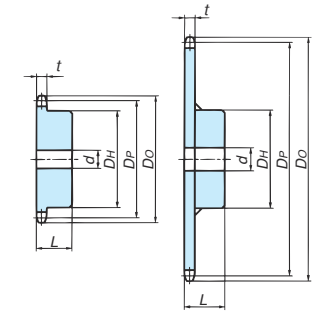

(Mechanically machined) (Welded construction)
1B type

Model Numbering Example

RS100 -1B 50T Q

Size
No. of strands/Hub type
No. of teeth
Teeth hardening
Q: Hardened
[Blank]: Unhardened

No. of Teeth	RS100 (t=18.0) PCD D_P	(Outer Dia.) (D_O)	Shaft Bore Dia. d: Pilot Bore	Max.	Hub: Dia. D_H	Length L	Approx. Mass kg	Material
10	102.75	117	18	43	65	50	1.8	Mechanically machined; machine-structural carbon steel
11	112.70	127	23	50	75	50	2.2	
12	122.67	138	23	57	86	50	2.8	
13	132.67	148	23	59	88	50	3.1	
14	142.68	158	23	59	88	50	3.4	
15	152.71	168	28	66	98	50	4.0	
16	162.75	179	28	66	98	50	4.3	
17	172.79	189	28	75	107	50	5.1	
18	182.84	199	28	75	107	50	5.4	
19	192.90	209	28	75	107	50	5.8	
20	202.96	220	28	75	107	50	6.3	
21	213.03	230	28	75	107	50	6.7	
22	223.10	240	33	80	117	56	8.1	
23	233.17	250	33	80	117	56	8.6	
24	243.25	260	33	80	117	56	9.1	
25	253.32	270	33	80	117	56	9.6	
26	263.41	281	33	80	117	56	10.2	
27	273.49	291	33	80	117	56	10.8	
28	283.57	301	33	80	117	56	11.4	
30	303.75	321	33	80	117	56	12.7	
32	323.92	341	33	80	117	56	14.1	Welded construction; machine-structural carbon steel (teeth, hub)
34	344.10	362	33	89	127	63	16.8	
35	354.20	372	33	89	127	63	17.5	
36	364.29	382	33	89	127	63	18.3	
38	384.48	402	33	89	127	63	20.0	
40	404.67	422	33	89	127	63	21.7	
42	424.86	443	33	89	127	63	23.6	
45	455.15	473	33	89	127	63	26.5	
48	485.45	503	33	89	127	63	**29.3**	
50	505.65	524	33	89	127	63	**31.5**	
54	546.05	564	33	103	147	80	**39.7**	
60	606.66	625	33	103	147	80	**47.4**	
65	657.17	675	33	103	147	80	**54.1**	
70	707.68	726	33	103	147	80	**61.8**	
75	758.20	777	33	103	147	80	**70.0**	

No. of Teeth	RS120 (t=24.0) PCD D_P	(Outer Dia.) (D_O)	Shaft Bore Dia. d: Pilot Bore	Max.	Hub: Dia. D_H	Length L	Approx. Mass kg	Material
10	123.29	140	23	51	78	56	3.0	Mechanically machined; machine-structural carbon steel
11	135.23	153	28	60	91	56	3.8	
12	147.21	165	28	66	98	56	4.5	
13	159.20	177	28	66	98	56	5.0	
14	171.22	190	28	75	107	56	6.0	
15	183.25	202	33	80	117	63	7.4	
16	195.29	214	33	80	117	63	8.1	
17	207.35	227	33	80	117	63	8.8	
18	219.41	239	33	80	117	63	9.5	
19	231.48	251	33	80	117	63	10.3	
20	243.55	263	33	89	127	63	11.7	
21	255.63	276	33	89	127	63	12.5	
22	267.72	288	33	89	127	63	13.6	Welded construction; machine-structural carbon steel (teeth, hub)
23	279.80	300	33	89	127	63	14.6	
24	291.90	312	33	89	127	63	15.6	
25	303.99	324	33	89	127	63	16.6	
26	316.09	337	33	89	127	63	17.7	
27	328.19	349	33	89	127	63	18.8	
28	340.29	361	33	103	147	71	22.3	
30	364.49	385	33	103	147	71	24.8	
32	388.71	410	33	103	147	71	27.4	
34	412.93	434	33	103	147	71	30.2	
35	425.04	446	33	103	147	71	**31.4**	
36	437.15	458	33	103	147	71	**33.0**	
38	461.37	483	38	103	147	80	**37.1**	
40	485.60	507	38	103	147	80	**40.4**	
42	509.83	531	38	103	147	80	**43.9**	
45	546.19	568	38	103	147	80	**49.5**	
48	582.54	604	38	103	147	80	**55.4**	
50	606.78	628	38	103	147	80	**59.6**	
54	655.26	677	38	110	157	90	**71.1**	
60	727.99	750	38	110	157	90	**85.8**	
65	788.60	811	38	118	167	94	**101.2**	
70	849.22	871	38	118	167	94	**115.7**	
75	909.84	932	38	118	167	94	**131.3**	

No. of Teeth	RS140 (t=24.0) PCD D_P	(Outer Dia.) (D_O)	Shaft Bore Dia. d: Pilot Bore	Max.	Hub: Dia. D_H	Length L	Approx. Mass kg	Material
10	143.84	163	28	60	91	56	4.1	Mechanically machined; machine-structural carbon steel
11	157.77	178	33	73	106	56	5.1	
12	171.74	193	33	80	117	56	6.3	
13	185.74	207	33	80	117	63	7.5	
14	199.76	221	33	89	127	63	8.9	
15	213.79	236	33	89	127	63	9.7	
16	227.84	250	33	89	127	63	10.6	
17	241.91	264	33	89	127	63	11.5	
18	255.98	279	33	89	127	63	12.5	
19	270.06	293	33	95	137	71	15.1	
20	284.14	307	33	95	137	71	16.2	
21	298.24	322	33	95	137	71	17.4	
22	312.34	336	33	103	147	71	19.6	Welded construction; machine-structural carbon steel (teeth, hub)
23	326.44	350	33	103	147	71	21.0	
24	340.54	364	33	103	147	71	22.3	
25	354.65	379	38	103	147	80	24.7	
26	368.77	393	38	103	147	80	**26.0**	
27	382.88	407	38	103	147	80	**27.6**	
28	397.00	421	38	103	147	80	**29.2**	
30	425.24	450	38	103	147	80	**32.6**	
32	453.49	478	38	103	147	80	**36.3**	
34	481.75	506	38	103	147	80	**40.1**	
35	495.88	521	38	110	157	90	**44.6**	
36	510.01	535	38	110	157	90	**46.7**	
38	538.27	563	38	110	157	90	**51.1**	
40	566.54	591	38	110	157	90	**55.6**	
42	594.81	620	38	118	167	94	**62.3**	
45	637.22	662	38	118	167	94	**70.0**	
48	679.63	705	38	118	167	94	**78.3**	
50	707.91	733	38	118	167	94	**84.0**	
54	764.47	790	38	118	167	94	**96.7**	
60	849.32	875	38	118	167	94	**116.6**	

No. of Teeth	RS160 (t=30.0) PCD D_P	(Outer Dia.) (D_O)	Shaft Bore Dia. d: Pilot Bore	Max.	Hub: Dia. D_H	Length L	Approx. Mass kg	Material	No. of Teeth
10	164.39	187	33	70	105	63	6.3	Mechanically machined; machine-structural carbon steel	**10**
11	180.31	203	33	80	117	63	7.8		**11**
12	196.28	220	33	89	127	63	9.4		**12**
13	212.27	237	33	95	137	71	11.9		**13**
14	228.29	253	33	95	137	71	13.2		**14**
15	244.33	269	33	95	137	71	14.5		**15**
16	260.39	286	33	103	147	71	16.7		**16**
17	276.46	302	33	103	147	71	18.2		**17**
18	292.55	319	33	103	147	71	19.9		**18**
19	308.64	335	33	103	147	71	21.6		**19**
20	324.74	351	33	103	147	71	23.4		**20**
21	340.84	368	33	103	147	71	25.4		**21**
22	356.96	384	38	118	167	80	30.6	Welded construction; machine-structural carbon steel (teeth, hub)	**22**
23	373.07	400	38	118	167	80	**32.4**		**23**
24	389.19	416	38	118	167	80	**34.6**		**24**
25	405.32	433	38	118	167	80	**37.0**		**25**
26	421.45	449	38	118	167	80	**39.5**		**26**
27	437.58	465	38	118	167	80	**42.0**		**27**
28	453.72	481	38	118	167	80	**44.6**		**28**
30	485.99	514	38	118	167	100	**53.5**		**30**
32	518.28	546	38	118	167	100	**59.5**		**32**
34	550.57	579	38	118	167	100	**65.8**		**34**
35	566.72	595	38	118	167	100	**69.2**		**35**
36	582.86	611	38	118	167	100	**72.6**		**36**
38	615.17	644	38	118	167	100	**80.1**		**38**
40	647.47	676	38	132	187	121	**94.4**		**40**
42	679.78	708	38	132	187	121	**102.2**		**42**
45	728.25	757	38	132	187	121	**115.2**		**45**
48	776.72	806	38	132	187	121	**128.5**		**48**
50	809.04	838	38	132	187	121	**137.9**		**50**
54	873.68	903	38	132	187	121	**157.7**		**54**
60	970.65	1000	38	132	187	121	**190.7**		**60**

Note: 1. Maximum bore diameters shown are standard figures. Determine bore diameter and key bearing pressure based on general mechanical design.
2. For hub types other than 1B and 2B, refer to the Tsubaki Drive Chains & Sprockets catalogue.
3. Models in the dimensional chart whose approximate mass is in bold font have one hanging hole. See the table below for more information.
4. Models in blue shaded areas have hardened teeth.
5. Models with unhardened teeth as standard can be manufactured with hardened teeth.
6. Models in shaded areas are made-to-order. All other models are stocked.
7. The above dimensions are nominal dimensions and may differ from actual dimensions.

◆ Hanging Hole Dimensions

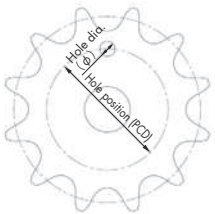

The phase relationship between the hanging hole and teeth may vary.

No. of Teeth		23T	24T	25T	26T	27T	28T	30T	32T	34T	35T	36T	38T	40T	42T	45T	48T	50T	54T	60T	65T	70T	75T
Hole Position (PCD) Size	RS100																392	412	453	513	564	614	665
	RS120										322	344	359	383	407	443	480	504	553	625	686	746	807
	RS140				263	277	291	319	348	376	390	404	432	461	489	531	574	602	659	743			
	RS160	261	277	293	309	326	342	374	406	438	455	471	503	535	568	616	665	697	762	859			
Hole Dia.		φ 40																					

Sprockets for BS/DIN Standard RS Roller Chain

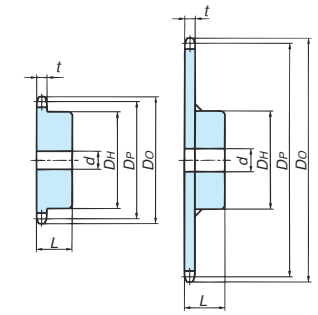

(Mechanically machined) (Welded construction)
1B type

Model Numbering Example

RS08B -1B 50T Q

Size
No. of strands/Hub type
No. of teeth
Teeth hardening
Q: Hardened
[Blank]: Unhardened

No. of Teeth	RS08B (t=7.2) PCD D_P	(Outer Dia.) (D_O)	Shaft Bore Dia. d: Pilot Bore	Shaft Bore Dia. d: Max.	Hub: Dia. D_H	Hub: Length L	Approx. Mass kg	Material	RS10B (t=9.0) PCD D_P	(Outer Dia.) (D_O)	Shaft Bore Dia. d: Pilot Bore	Shaft Bore Dia. d: Max.	Hub: Dia. D_H	Hub: Length L	Approx. Mass kg	Material	RS12B (t=11.0) PCD D_P	(Outer Dia.) (D_O)	Shaft Bore Dia. d: Pilot Bore	Shaft Bore Dia. d: Max.	Hub: Dia. D_H	Hub: Length L	Approx. Mass kg	Material	RS16B (t=16.1) PCD D_P	(Outer Dia.) (D_O)	Shaft Bore Dia. d: Pilot Bore	Shaft Bore Dia. d: Max.	Hub: Dia. D_H	Hub: Length L	Approx. Mass kg	Material	No. of Teeth
9	37.13	41	9.53	15	28	22	0.12	※	46.42	52	9.53	19	34	25	0.20	※	55.70	63	9.53	24.5	43	32	0.40	※	74.26	84	15.9	34	57	40	0.87	※	9
10	41.10	45	9.53	16.5	32	22	0.16	※	51.37	57	9.53	22	40	25	0.27	※	61.65	69	12.7	30	49	32	0.49	※	82.20	92	15.9	32	52	40	0.97	Mechanically machined; machine-structural carbon steel	10
11	45.08	49	9.53	18	36	22	0.2	※	56.35	62	12.7	25	45	25	0.33	※	67.62	75	12.7	32	51	32	0.60	※	90.16	100	15.9	38	60	40	1.2		11
12	49.07	53	9.53	22	40	22	0.24	※	61.34	67	12.7	32	50	25	0.41	※	73.60	81	12.7	32	51	32	0.69		98.14	108	19.05	45	67	40	1.5		12
13	53.07	57	9.53	20	37	22	0.24		66.33	72	12.7	32	51	25	0.46	※	79.60	87	15.88	35	57	32	0.81		106.14	116	19.05	50	77	40	1.9		13
14	57.07	61	9.53	24	42	22	0.29		71.34	77	12.7	32	52	25	0.52		85.61	93	15.88	39.5	62	32	1.0		114.15	124	19.05	50	77	40	2.0		14
15	61.08	65	9.53	28.5	46	22	0.34		76.35	82	12.7	35	57	25	0.62		91.63	99	15.88	45.5	68	32	1.1		122.17	132	19.05	63	93	40	2.6		15
16	65.10	69	12.7	30	50	22	0.39		81.37	87	12.7	40	62	25	0.72		97.65	105	15.88	47.5	73	32	1.3		130.20	140	19.05	63	93	40	2.8		16
17	69.12	73	12.7	32	54	22	0.45		86.39	92	12.7	45.5	67	25	0.83		103.67	111	15.88	47.5	73	32	1.4		138.23	148	19.05	63	93	40	3.0		17
18	73.14	77	12.7	35	57	22	0.51		91.42	97	12.7	47.5	72	28	1.0		109.70	117	15.88	55	83	40	2.0		146.27	156	19.05	63	93	40	3.2		18
19	77.16	81	12.7	39.5	62	22	0.59		96.45	103	12.7	47.5	73	28	1.1		115.74	123	15.88	55	83	40	2.1		154.32	164	23	63	93	40	3.4		19
20	81.18	85	12.7	45.5	67	25	0.76		101.48	108	12.7	47.5	73	28	1.2		121.78	129	15.88	55	83	40	2.2		162.37	172	23	63	93	40	3.6		20
21	85.21	89	12.7	45.5	71	25	0.85		106.51	113	15.88	47.5	73	28	1.2		127.82	135	15.88	55	83	40	2.3		170.42	180	23	63	93	40	3.8		21
22	89.24	93	12.7	50	75	25	0.95		111.55	118	15.88	47.5	73	28	1.3		133.86	141	15.88	55	83	40	2.5		178.48	188	28	75	107	45	4.8		22
23	93.27	97	12.7	50	77	25	1.0		116.59	123	15.88	47.5	73	28	1.3		139.90	147	18	55	83	40	2.5		186.54	196	28	75	107	45	5.1		23
24	97.30	102	12.7	42	63	25	0.84		121.62	128	15.88	47.5	73	28	1.4		145.95	153	18	55	83	40	2.6		194.60	205	28	75	107	45	5.4		24
25	101.33	106	12.7	42	63	25	0.88		126.66	133	15.88	47.5	73	28	1.5		151.99	159	18	55	83	40	2.7		202.66	213	28	75	107	45	5.6		25
26	105.36	110	12.7	42	63	25	0.92		131.70	138	18	48	73	28	1.5		158.04	165	18	55	83	40	2.9		210.72	221	28	75	107	45	5.9		26
27	109.40	114	12.7	42	63	25	0.96		136.74	143	18	48	73	28	1.5		164.09	171	18	55	83	40	3.0		218.79	229	28	75	107	45	6.1		27
28	113.43	118	12.7	42	63	25	1.0		141.79	148	18	48	73	28	1.6		170.14	178	18	55	83	40	3.1		226.86	237	28	75	107	45	6.5		28
30	121.50	126	12.7	42	63	25	1.1		151.87	158	18	48	73	28	1.8		182.25	190	18	55	83	40	3.4		243.00	253	28	75	107	45	7.1		30
32	129.57	134	16	45	68	28	1.3		161.96	168	18	48	73	28	1.9		194.35	202	18	55	83	40	3.7		259.14	269	28	75	107	45	7.8		32
34	137.64	142	16	45	68	28	1.3		172.05	178	18	48	73	28	2.1		206.46	214	18	55	83	40	4.0		275.28	285	28	75	107	45	8.5		34
35	141.68	146	16	45	68	28	1.4		177.10	183	18	48	73	28	2.2		212.52	220	18	55	83	40	4.2		283.36	293	28	75	107	45	8.9		35
36	145.72	150	16	45	68	28	1.4		182.15	188	23	55	83	35	2.7		218.57	226	18	55	83	40	4.4		291.43	301	33	80	117	50	10.1		36
38	153.79	158	16	45	68	28	1.5		192.24	198	23	55	83	35	2.9		230.69	238	18	55	83	40	4.8		307.58	318	33	80	117	50	10.9		38
40	161.87	166	16	45	68	28	1.6		202.33	208	23	55	83	35	3.1		242.80	250	18	55	83	40	5.1		323.74	334	33	80	117	50	11.8		40
42	169.94	174	18	48	73	32	2.0		212.43	218	23	55	83	35	3.3		254.92	262	23	63	93	45	6.0		339.89	350	33	80	117	50	12.7		42
45	182.06	186	18	48	73	32	2.1		227.58	234	23	55	83	35	3.6		273.09	280	23	63	93	45	6.7		364.12	374	33	80	117	50	14.2		45
48	194.18	198	18	48	73	32	2.3		242.73	249	23	55	83	35	4.0		291.27	299	23	63	93	45	7.4		388.36	398	33	80	117	50	15.8		48
50	202.26	206	18	48	73	32	2.5		252.82	259	23	55	83	35	4.3		303.39	311	23	63	93	45	8.0		404.52	414	33	80	117	50	16.8		50
54	218.42	223	18	48	73	32	2.8		273.03	279	23	55	83	35	4.8		327.63	335	23	63	93	45	8.9		436.84	447	33	80	117	50	19.2		54
60	242.66	247	18	48	73	32	3.2		303.33	309	23	55	83	35	5.6		363.99	371	23	63	93	45	10.6		485.33	495	33	80	117	50	23.1		60

Note: 1. Maximum bore diameters shown are standard figures. Determine bore diameter and key bearing pressure based on general mechanical design.
2. Models marked with a ※ have a groove around the periphery of the hub. Refer to the table below for groove outer diameters.
3. Welded construction: Carbon steel for machine structural use (teeth and hub)
4. Models in shaded areas have hardened teeth.
5. Models with unhardened teeth as standard can be manufactured with hardened teeth.
6. All models stocked.
7. The above dimensions are nominal dimensions and may differ from actual dimensions.

◆ Groove around Periphery of Hub

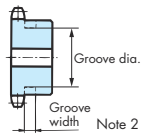

Size		RS08B	RS10B	RS12B	RS16B
Groove Width		5.8	6.4	8.0	10.4
No. of Teeth/ Groove Dia.	9T	21	27	32	44
	10T	25	32	37	–
	11T	30	37	45	–
	12T	32	42	–	–
	13T	–	47	–	–

RS Sprockets 2-Strand

RS Sprockets RS40 / RS50 2-Strand

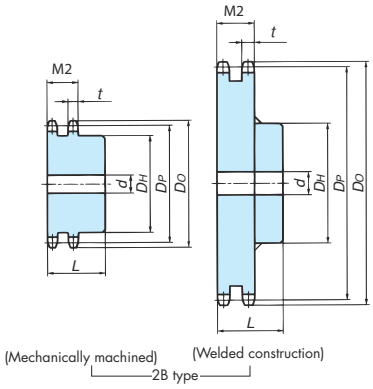

Model Numbering Example

RS40 -2B 50T Q

- Size
- No. of strands/Hub type
- No. of teeth
- Teeth hardening
  - Q: Hardened
  - [Blank]: Unhardened

No. of Teeth	RS40 (t=7.1, M2=21.5)								RS50 (t=8.7, M2=26.8)							
	Pitch Circle Dia. D_P	(Outer Dia.) (D_O)	Shaft Bore Dia. d		Hub		Approx. Mass kg	Material	Pitch Circle Dia. D_P	(Outer Dia.) (D_O)	Shaft Bore Dia. d		Hub		Approx. Mass kg	Material
			Pilot Bore	Max.	Dia. D_H	Length L					Pilot Bore	Max.	Dia. D_H	Length L		
12	49.07	55	9.5	18	32	35	0.29	Mechanically machined; machine–structural carbon steel	61.34	69	12.7	24	42	40	0.55	Mechanically machined; machine–structural carbon steel
13	53.07	59	12.7	20	37	35	0.36		66.33	74	12.7	28.5	47	40	0.68	
14	57.07	63	12.7	24	42	35	0.44		71.34	79	12.7	32	52	40	0.81	
15	61.08	67	12.7	29	46	35	0.53		76.35	84	12.7	35	57	40	0.96	
16	65.10	71	12.7	30	50	35	0.62		81.37	89	12.7	40	62	45	1.2	
17	69.12	76	12.7	32	54	35	0.71		86.39	94	12.7	45.5	67	45	1.4	
18	73.14	80	12.7	35	57	35	0.80		91.42	100	12.7	47.5	72	45	1.6	
19	77.16	84	12.7	40	62	35	0.93		96.45	105	15.9	52	79	45	1.9	
20	81.18	88	12.7	46	67	40	1.2		101.48	110	15.9	55	82	45	2.1	
21	85.21	92	12.7	47	71	40	1.3		106.51	115	15.9	60	89	45	2.4	
22	89.24	96	12.7	50	75	40	1.5		111.55	120	15.9	63	92	50	2.8	
23	93.27	100	12.7	50	77	40	1.6		116.59	125	15.9	67	99	50	3.2	
24	97.30	104	12.7	55	83	40	1.8		121.62	130	15.9	70	102	50	3.5	
25	101.33	108	12.7	59	87	40	2.0		126.66	135	15.9	75	109	50	3.9	
26	105.36	112	12.7	62	91	40	2.2		131.70	140	18	63	93	50	3.6	
27	109.40	116	12.7	65	95	40	2.4		136.74	145	18	63	93	50	3.8	
28	113.43	120	12.7	67	99	40	2.6		141.79	150	18	63	93	50	4.0	
30	121.50	128	12.7	73	106	40	3.0		151.87	161	18	63	93	50	4.5	
32	129.57	137	12.7	78	115	50	4.2		161.96	171	18	63	93	50	5.0	
34	137.64	145	12.7	84	124	50	4.9		172.05	181	18	63	93	50	5.5	
35	141.68	149	16	63	93	50	3.9		177.10	186	18	63	93	50	5.8	
36	145.72	153	16	63	93	50	4.0		182.15	191	18	63	93	50	6.1	
38	153.79	161	16	63	93	50	4.3		192.24	201	18	63	93	50	6.7	Welded construction; machine–structural carbon steel (teeth, hub)
40	161.87	169	16	63	93	50	4.6		202.33	211	23	66	98	56	7.7	
42	169.94	177	16	63	93	50	5.0		212.43	221	23	66	98	56	8.4	
45	182.06	189	18	63	93	50	5.5		227.58	237	23	66	98	56	9.4	
48	194.18	201	18	63	93	50	6.0	Welded construction; machine–structural carbon steel (teeth, hub)	242.73	252	23	66	98	56	10.6	
50	202.26	209	18	63	93	50	6.5		252.82	262	23	66	98	56	11.4	
54	218.42	226	18	63	93	50	7.3		273.03	282	23	66	98	63	13.4	
60	242.66	250	18	63	93	50	8.8		303.33	312	23	66	98	63	16.2	

Note: 1. Maximum bore diameters shown are standard figures. Determine bore diameter and key bearing pressure based on general mechanical design.
2. For hub types other than 1B and 2B, refer to the Tsubaki Drive Chains & Sprockets catalogue.
3. Models in blue shaded areas have hardened teeth.
4. Models with unhardened teeth as standard can be manufactured with hardened teeth.
5. Models in shaded areas ▨ are made-to-order. All other models are stocked.
6. The above dimensions are nominal dimensions and may differ from actual dimensions.

RS Sprockets RS60 to RS100 2-Strand

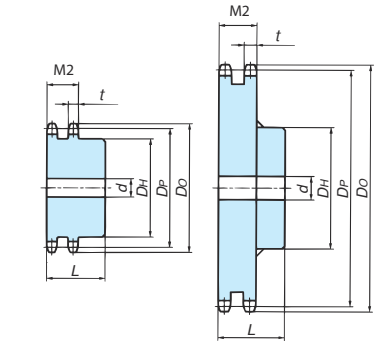

(Mechanically machined) (Welded construction)
2B type

Model Numbering Example

RS80 -2B 17T Q

Size
No. of strands/Hub type
No. of teeth
Teeth hardening
Q: Hardened
[Blank]: Unhardened

No. of Teeth	RS60 (t=11.7, M2=34.5) PCD D_P	(Outer Dia.) (D_O)	Shaft Bore Dia. d Pilot Bore	Max.	Hub Dia. D_H	Length L	Approx. Mass kg	Material	RS80 (t=14.6, M2=43.9) PCD D_P	(Outer Dia.) (D_O)	Shaft Bore Dia. d Pilot Bore	Max.	Hub Dia. D_H	Length L	Approx. Mass kg	Material	RS100 (t=17.6, M2=53.4) PCD D_P	(Outer Dia.) (D_O)	Shaft Bore Dia. d Pilot Bore	Max.	Hub Dia. D_H	Length L	Approx. Mass kg	Material
12	73.60	83	12.7	32	51	50	1.1		98.14	110	19	46	67	63	2.3		122.67	138	23	58	86	80	4.7	
13	79.60	89	15.9	35	57	50	1.3		106.14	118	19	50	77	63	2.9		132.67	148	23	65	95	80	5.7	
14	85.61	95	15.9	39.5	62	56	1.6		114.15	127	19	58	86	63	3.5		142.68	158	23	72	105	80	6.8	A
15	91.63	101	15.9	45.5	68	56	1.9		122.17	135	19	64	94	63	4.1		152.71	168	28	66	98	80	7.3	
16	97.65	107	15.9	50	76	56	2.3		130.20	143	19	70	102	71	5.3	A	162.75	179	28	66	98	80	8.3	Note 7
17	103.67	113	15.9	55	82	56	2.7		138.23	151	19	76	110	71	6.1		172.79	189	28	75	107	80	9.6	
18	109.70	119	15.9	59	87	56	3.0		146.27	159	23	66	98	71	6.1	Note 7	182.84	199	28	75	107	80	10.7	
19	115.74	126	15.9	63	95	56	3.5	A	154.32	167	23	66	98	71	6.7		192.90	209	28	89	127	90	13.6	
20	121.78	132	15.9	69	101	56	3.9		162.37	176	23	75	107	71	7.7		202.96	220	28	89	127	90	14.8	
21	127.82	138	15.9	75	107	56	4.4		170.42	184	23	75	107	71	8.3		213.03	230	28	89	127	90	16.0	
22	133.86	144	15.9	78	113	56	4.9	Note 7	178.48	192	28	80	117	71	9.3		223.10	240	33	95	137	90	17.8	
23	139.90	150	18	66	98	56	4.8		186.54	200	28	80	117	71	10.0		233.17	250	33	95	137	90	19.2	
24	145.95	156	18	66	98	56	5.1		194.60	208	28	80	117	80	11.6		243.25	260	33	95	137	90	20.7	B
25	151.99	162	18	66	98	56	5.4		202.66	216	28	80	117	80	12.4		253.32	270	33	95	137	90	22.2	
26	158.04	168	18	66	98	56	5.8		210.72	224	28	80	117	80	13.2		263.41	281	33	95	137	90	23.8	
27	164.09	174	18	66	98	56	6.2		218.79	233	28	80	117	80	14.1		273.49	291	33	95	137	90	25.4	Note 7
28	170.14	181	18	66	98	56	6.6		226.86	241	28	80	117	80	15.0		283.57	301	33	95	137	90	27.2	
30	182.25	193	18	66	98	56	7.5		243.00	257	28	80	117	80	17.0	B	303.75	321	33	95	137	90	30.9	
32	194.35	205	18	66	98	56	8.4		259.14	273	28	80	117	80	19.0		323.92	341	33	95	137	90	**34.4**	
34	206.46	217	18	66	98	56	9.4		275.28	289	28	80	117	80	21.2		344.10	362	33	95	137	90	**38.6**	
35	212.52	223	18	66	98	56	9.9		283.36	297	28	80	117	80	22.4		354.20	372	33	95	137	90	**40.8**	
36	218.57	229	18	66	98	56	10.4		291.43	306	28	80	117	80	23.6	Note 7	364.29	382	33	95	137	90	**43.0**	
38	230.69	241	18	66	98	56	11.5	B	307.58	322	28	80	117	80	26.0		384.48	402	33	103	137	90	**47.8**	
40	242.80	253	18	66	98	56	12.7		323.74	338	33	89	127	90	**29.8**		404.67	422	33	103	147	100	**54.7**	
42	254.92	266	23	75	107	71	15.1		339.89	354	33	89	127	90	**32.5**		424.86	443	33	103	147	100	**60.0**	C
45	273.09	284	23	75	107	71	17.1	Note 7	364.12	378	33	89	127	90	**36.9**		455.15	473	33	103	147	100	**68.5**	Note 7
48	291.27	302	23	75	107	71	19.1		388.36	403	33	89	127	90	**41.6**	C	485.45	503	33	103	147	115	**79.4**	
50	303.39	314	23	75	107	71	20.6		404.52	419	33	89	127	90	**45.0**	Note 7	505.65	524	33	103	147	115	**85.8**	
54	327.63	339	23	75	107	71	23.7		436.84	451	33	89	127	90	**52.2**		546.05	564	33	103	147	115	**99.4**	
60	363.99	375	23	75	107	71	**28.7**		485.33	500	33	89	127	90	**63.9**		606.66	625	33	103	147	115	**121.6**	

Note: 1. Maximum bore diameters shown are standard figures. Determine bore diameter and key bearing pressure based on general mechanical design.
2. For hub types other than 1B and 2B, refer to the Tsubaki Drive Chains & Sprockets catalogue.
3. Models in the dimensional chart whose approximate mass is in bold font have one hanging hole. See the table below for more information.
4. Models in blue shaded areas have hardened teeth.
5. Models with unhardened teeth as standard can be manufactured with hardened teeth.
6. Models in shaded areas are made-to-order. All other models are stocked.
7. Material A: Mechanically machined, machine-structural carbon steel; B: Welded construction, machine-structural carbon steel (teeth and hub); C: Welded construction, rolled steel for general structural use (teeth), machine-structural carbon steel (hub)
8. The above dimensions are nominal dimensions and may differ from actual dimensions.

◆ Hanging Hole Dimensions

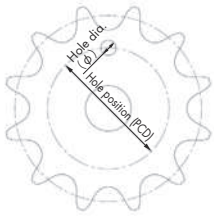

The phase relationship between the hanging hole and teeth may vary.

No. of Teeth		32T	34T	35T	36T	38T	40T	42T	45T	48T	50T	54T	60T
Hole Position (PCD) Size	RS60												293
	RS80						242	258	283	307	323	355	404
	RS100	224	245	255	265	285	305	326	356	386	407	447	508
Hole Dia.		RS60 · RS80: φ30, RS100: φ35											

RS Sprockets Stainless Steel

Stainless steel

Uses stainless steel for superb corrosion resistance. Also highly resistant to high and low temperatures for use in special environments.

Applicable chain sizes : RS25 to RS80
Hub type : 1B (single hub)

Stainless steel wear-resistant series

Recommended for HS Series stainless steel chain
We recommend using stainless steel wear-resistant sprockets when the applied load is greater than the maximum allowable load of SS Series chain.

Special surface treatment gives the sprocket better wear resistance
These sprockets are also ideal for extending sprocket wear life when using stainless steel chain.

Applicable chain sizes : RS40 to RS80
Hub type : 1B (single hub)

Note: The coating on the sprocket may flake off when the sprocket engages with the chain. When using in environments where coating flakes or wear dust may present a problem, take measures to prevent contamination by, for example, installing an appropriate cover.

Model Numbering Example

RS35 -1B 13T - SS

Size — No. of strands — Hub type **B**: Single hub — No. of teeth — Series **SS** : Stainless steel, **SST** : Wear-resistant stainless steel

RS25 1B Type

Applicable chain pitch: 6.35 mm Roller dia.: 3.3 mm

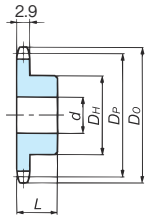

Model No.	No. of Teeth	Pitch Circle Dia. Dp	Outer Dia. Do	Bore Dia. d		Hub		Approx. Mass kg
				Pilot Bore	Max.	Dia. D_H	Length L	
RS25-1B10T-SS	10	20.55	23	6	9	14	15	0.02
RS25-1B11T-SS	11	22.54	25	6	10	16	15	0.03
RS25-1B12T-SS	12	24.53	28	6	11	18	15	0.04
RS25-1B13T-SS	13	26.53	30	6	12	20	15	0.05
RS25-1B14T-SS	14	28.54	32	6	12	20	15	0.06
RS25-1B15T-SS	15	30.54	34	6	12	20	20	0.07
RS25-1B16T-SS	16	32.55	36	8	15	25	20	0.08
RS25-1B17T-SS	17	34.56	38	8	15	25	20	0.09
RS25-1B18T-SS	18	36.57	40	8	15	25	20	0.10
RS25-1B19T-SS	19	38.58	42	8	15	25	20	0.10
RS25-1B20T-SS	20	40.59	44	8	15	25	20	0.10
RS25-1B21T-SS	21	42.61	46	10	18	30	20	0.12
RS25-1B22T-SS	22	44.62	48	10	18	30	20	0.13
RS25-1B23T-SS	23	46.63	50	10	18	30	20	0.13
RS25-1B24T-SS	24	48.65	52	10	21	35	20	0.15
RS25-1B25T-SS	25	50.66	54	10	21	35	20	0.16
RS25-1B26T-SS	26	52.68	56	10	25	40	20	0.17
RS25-1B27T-SS	27	54.70	58	10	25	40	20	0.20
RS25-1B28T-SS	28	56.71	60	10	25	40	20	0.21
RS25-1B30T-SS	30	60.75	64	12	28	45	20	0.23
RS25-1B32T-SS	32	64.78	68	12	31	50	20	0.40
RS25-1B34T-SS	34	68.82	72	12	31	50	20	0.41
RS25-1B35T-SS	35	70.84	74	12	31	50	20	0.41
RS25-1B36T-SS	36	72.86	76	12	31	50	20	0.42
RS25-1B38T-SS	38	76.90	80	12	31	50	22	0.43
RS25-1B40T-SS	40	80.93	84	12	31	50	22	0.45
Material/specifications	Machined stainless steel							

Delivery: All models are in stock.

RS35 1B Type

Applicable chain pitch: 9.525 mm Roller dia.: 5.08 mm

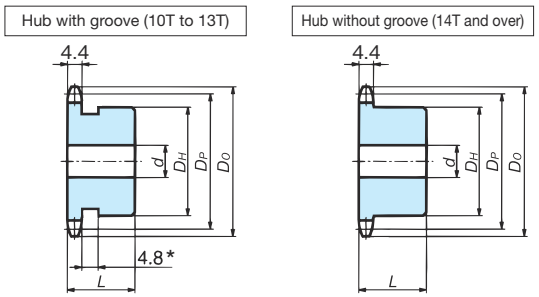

No. of teeth	Hub dia	Groove dia.
10T	ϕ25	ϕ18
11T	ϕ27	ϕ22
12T	ϕ31	ϕ24
13T	ϕ32	ϕ28

* The groove is provided around the periphery of the hub to prevent sprocket–chain interference.

Model No.	No. of Teeth	Pitch Circle Dia. Dp	Outer Dia. Do	Bore Dia. d		Hub		Approx. Mass kg
				Pilot Bore	Max.	Dia. D_H	Length L	
RS35-1B10T-SS	10	30.82	35	8	12	25	20	0.08
RS35-1B11T-SS	11	33.81	38	8	14	27	20	0.09
RS35-1B12T-SS	12	36.80	41	8	16.5	31	20	0.12
RS35-1B13T-SS	13	39.80	44	9.5	18	32	20	0.12
RS35-1B14T-SS	14	42.80	47	9.5	16.5	30	20	0.12
RS35-1B15T-SS	15	45.81	51	9.5	19	35	20	0.16
RS35-1B16T-SS	16	48.82	54	9.5	20	37	20	0.19
RS35-1B17T-SS	17	51.84	57	9.5	24	41	20	0.22
RS35-1B18T-SS	18	54.85	60	9.5	24.5	44	20	0.25
RS35-1B19T-SS	19	57.87	63	9.5	28.5	47	20	0.28
RS35-1B20T-SS	20	60.89	66	9.5	30	50	20	0.32
RS35-1B21T-SS	21	63.91	69	9.5	32	53	20	0.36
RS35-1B22T-SS	22	66.93	72	9.5	32	53	20	0.37
RS35-1B23T-SS	23	69.95	75	9.5	32	53	20	0.40
RS35-1B24T-SS	24	72.97	78	9.5	32	53	22	0.43
RS35-1B25T-SS	25	76.00	81	12.7	32	53	22	0.44
RS35-1B26T-SS	26	79.02	84	12.7	32	53	22	0.45
RS35-1B27T-SS	27	82.05	87	12.7	32	53	22	0.46
RS35-1B28T-SS	28	85.07	90	12.7	32	53	22	0.48
RS35-1B30T-SS	30	91.12	96	12.7	32	53	22	0.51
RS35-1B32T-SS	32	97.18	102	12.7	32	53	22	0.54
RS35-1B34T-SS	34	103.23	109	12.7	32	53	22	0.57
RS35-1B35T-SS	35	106.26	112	12.7	32	53	22	0.59
RS35-1B36T-SS	36	109.29	115	12.7	32	53	22	0.61
RS35-1B38T-SS	38	115.34	121	13	42	63	25	0.82
RS35-1B40T-SS	40	121.40	127	13	42	63	25	0.85
Material/specifications	Machined stainless steel							

RS40 1B Type

Applicable chain pitch: 12.70 mm Roller dia.: 7.92 mm

Hub with groove (10T to 12T)

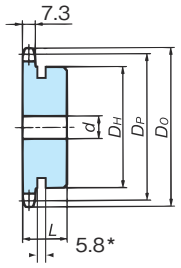

Hub without groove (13 and over)

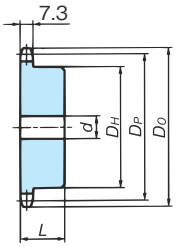

No. of teeth	Hub dia	Groove dia.
10T	ϕ32	ϕ25
11T	ϕ37	ϕ30
12T	ϕ40	ϕ32

* The groove is provided around the periphery of the hub to prevent sprocket–chain interference.

Model No.	No. of Teeth	Pitch Circle Dia. Dp	Outer Dia. Do	Bore Dia. d		Hub		Approx. Mass kg
				Pilot Bore	Max.	Dia. D_H	Length L	
RS40-1B10T-SS	10	41.10	47	9.5	16.5	32	22	0.14
RS40-1B11T-SS	11	45.08	51	9.5	20	37	22	0.19
RS40-1B12T-SS	12	49.07	55	9.5	22	40	22	0.22
RS40-1B13T-SS	13	53.07	59	9.5	20	37	22	0.23
RS40-1B14T-SS	14	57.07	63	9.5	24	42	22	0.28
RS40-1B15T-SS	15	61.08	67	9.5	28.5	46	22	0.34
RS40-1B16T-SS	16	65.10	71	12.7	30	50	22	0.40
RS40-1B17T-SS	17	69.12	76	12.7	32	54	22	0.46
RS40-1B18T-SS	18	73.14	80	12.7	35	57	22	0.51
RS40-1B19T-SS	19	77.16	84	12.7	39.5	62	22	0.59
RS40-1B20T-SS	20	81.18	88	12.7	45.5	67	25	0.76
RS40-1B21T-SS	21	85.21	92	12.7	45.5	71	25	0.85
RS40-1B22T-SS	22	89.24	96	12.7	50	75	25	0.95
RS40-1B23T-SS	23	93.27	100	12.7	50	77	25	1.0
RS40-1B24T-SS	24	97.30	104	12.7	42	63	25	0.84
RS40-1B25T-SS	25	101.33	108	12.7	42	63	25	0.88
RS40-1B26T-SS	26	105.36	112	12.7	42	63	25	0.92
RS40-1B27T-SS	27	109.40	116	12.7	42	63	25	0.96
RS40-1B28T-SS	28	113.43	120	12.7	42	63	25	1.0
RS40-1B30T-SS	30	121.50	128	12.7	42	63	25	1.1
RS40-1B32T-SS	32	129.57	137	16	45	68	28	1.3
RS40-1B34T-SS	34	137.64	145	16	45	68	28	1.3
RS40-1B35T-SS	35	141.68	149	16	45	68	28	1.4
RS40-1B36T-SS	36	145.72	153	16	45	68	28	1.4
RS40-1B38T-SS	38	153.79	161	16	45	68	28	1.5
RS40-1B40T-SS	40	161.87	169	16	45	68	28	1.6
Material/specifications	Machined stainless steel							

RS50 1B Type

Applicable chain pitch: 15.875 mm Roller dia.: 10.16 mm

Hub with groove (10T to 13T)

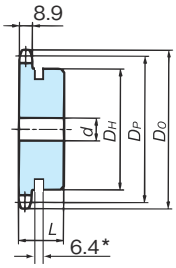

Hub without groove (14 and over)

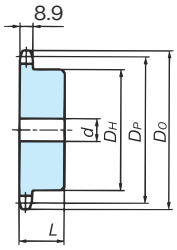

No. of teeth	Hub dia	Groove dia.
10T	ϕ40	ϕ32
11T	ϕ46	ϕ37
12T	ϕ51	ϕ42
13T	ϕ51	ϕ47

* The groove is provided around the periphery of the hub to prevent sprocket–chain interference.

Model No.	No. of Teeth	Pitch Circle Dia. Dp	Outer Dia. Do	Bore Dia. d		Hub		Approx. Mass kg
				Pilot Bore	Max.	Dia. D_H	Length L	
RS50-1B10T-SS	10	51.37	58	9.5	22	40	25	0.27
RS50-1B11T-SS	11	56.35	64	12.7	25	46	25	0.33
RS50-1B12T-SS	12	61.34	69	12.7	32	51	25	0.41
RS50-1B13T-SS	13	66.33	74	12.7	32	51	25	0.46
RS50-1B14T-SS	14	71.34	79	12.7	32	52	25	0.52
RS50-1B15T-SS	15	76.35	84	12.7	35	57	25	0.62
RS50-1B16T-SS	16	81.37	89	12.7	40	62	25	0.72
RS50-1B17T-SS	17	86.39	94	12.7	45.5	67	25	0.83
RS50-1B18T-SS	18	91.42	100	12.7	47.5	72	28	1.0
RS50-1B19T-SS	19	96.45	105	12.7	47.5	73	28	1.1
RS50-1B20T-SS	20	101.48	110	12.7	47.5	73	28	1.2
RS50-1B21T-SS	21	106.51	115	15.9	47.5	73	28	1.2
RS50-1B22T-SS	22	111.55	120	15.9	47.5	73	28	1.3
RS50-1B23T-SS	23	116.59	125	15.9	47.5	73	28	1.3
RS50-1B24T-SS	24	121.62	130	15.9	47.5	73	28	1.4
RS50-1B25T-SS	25	126.66	135	15.9	47.5	73	28	1.5
RS50-1B26T-SS	26	131.70	140	18	48	73	28	1.5
RS50-1B27T-SS	27	136.74	145	18	48	73	28	1.5
RS50-1B28T-SS	28	141.79	150	18	48	73	28	1.6
RS50-1B30T-SS	30	151.87	161	18	48	73	28	1.8
RS50-1B32T-SS	32	161.96	171	18	48	73	28	1.9
RS50-1B34T-SS	34	172.05	181	18	48	73	28	2.1
RS50-1B35T-SS	35	177.10	186	18	48	73	28	2.2
RS50-1B36T-SS	36	182.15	191	23	55	83	35	2.7
RS50-1B38T-SS	38	192.24	201	23	55	83	35	2.9
RS50-1B40T-SS	40	202.33	211	23	55	83	35	3.1
Material/specifications	Machined stainless steel							

Delivery: All stainless steel models are in stock.
Wear-resistant stainless steel models are made-to-order.

RS Sprockets Stainless Steel

RS60 1B Type

Applicable chain pitch: 19.05 mm Roller dia.: 11.91 mm

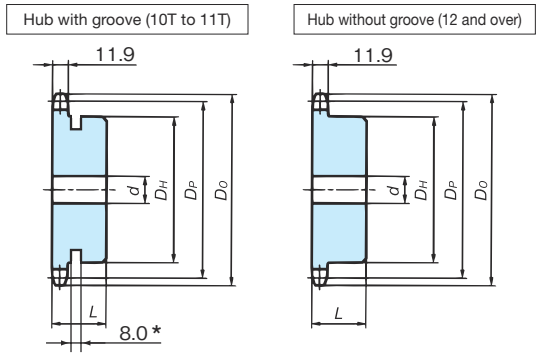

No. of teeth: Hub dia : Groove dia.
10T : ϕ49 : ϕ37
11T : ϕ51 : ϕ45

* The groove is provided around the periphery of the hub to prevent sprocket–chain interference.

Model No.	No. of Teeth	Pitch Circle Dia. Dp	Outer Dia. Do	Bore Dia. d		Hub		Approx. Mass kg
				Pilot Bore	Max.	Dia. D_H	Length L	
RS60-1B10T-SS	10	61.65	70	12.7	30	49	32	0.49
RS60-1B11T-SS	11	67.62	76	12.7	32	51	32	0.60
RS60-1B12T-SS	12	73.60	83	12.7	32	51	32	0.69
RS60-1B13T-SS	13	79.60	89	15.9	35	57	32	0.81
RS60-1B14T-SS	14	85.61	95	15.9	39.5	62	32	0.96
RS60-1B15T-SS	15	91.63	101	15.9	45.5	68	32	1.1
RS60-1B16T-SS	16	97.65	107	15.9	47.5	73	32	1.3
RS60-1B17T-SS	17	103.67	113	15.9	47.5	73	32	1.4
RS60-1B18T-SS	18	109.70	119	15.9	55	83	40	2.0
RS60-1B19T-SS	19	115.74	126	15.9	55	83	40	2.1
RS60-1B20T-SS	20	121.78	132	15.9	55	83	40	2.2
RS60-1B21T-SS	21	127.82	138	15.9	55	83	40	2.3
RS60-1B22T-SS	22	133.86	144	15.9	55	83	40	2.5
RS60-1B23T-SS	23	139.90	150	18	55	83	40	2.5
RS60-1B24T-SS	24	145.95	156	18	55	83	40	2.6
RS60-1B25T-SS	25	151.99	162	18	55	83	40	2.7
RS60-1B26T-SS	26	158.04	168	18	55	83	40	2.9
RS60-1B27T-SS	27	164.09	174	18	55	83	40	3.0
RS60-1B28T-SS	28	170.14	181	18	55	83	40	3.1
RS60-1B30T-SS	30	182.25	193	18	55	83	40	3.4
Material/specifications	Machined stainless steel							

RS80 1B Type

Applicable chain pitch: 25.40 mm Roller dia.: 15.88 mm

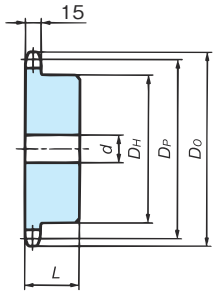

Model No.	No. of Teeth	Pitch Circle Dia. Dp	Outer Dia. Do	Bore Dia. d		Hub		Approx. Mass kg
				Pilot Bore	Max.	Dia. D_H	Length L	
RS80-1B10T-SS	10	82.20	93	15.9	32	52	40	0.97
RS80-1B11T-SS	11	90.16	102	15.9	38	60	40	1.2
RS80-1B12T-SS	12	98.14	110	19	45	67	40	1.5
RS80-1B13T-SS	13	106.14	118	19	50	77	40	1.9
RS80-1B14T-SS	14	114.15	127	19	50	77	40	2.0
RS80-1B15T-SS	15	122.17	135	19	63	93	40	2.6
RS80-1B16T-SS	16	130.20	143	19	63	93	40	2.8
RS80-1B17T-SS	17	138.23	151	19	63	93	40	3.0
RS80-1B18T-SS	18	146.27	159	19	63	93	40	3.2
RS80-1B19T-SS	19	154.32	167	23	63	93	40	3.4
RS80-1B20T-SS	20	162.37	176	23	63	93	40	3.6
RS80-1B21T-SS	21	170.42	184	23	63	93	40	3.8
RS80-1B22T-SS	22	178.48	192	28	75	107	45	4.8
RS80-1B23T-SS	23	186.54	200	28	75	107	45	5.1
RS80-1B24T-SS	24	194.60	208	28	75	107	45	5.4
RS80-1B25T-SS	25	202.66	216	28	75	107	45	5.6
Material/specifications	Machined stainless steel							

Delivery: All stainless steel models are in stock.
Wear-resistant stainless steel models are made-to-order.

RS Sprockets Engineering Plastic

Engineering plastic

Uses a special MC901 nylon plastic (blue). Allows for lube-free operation.
(Chain speed less than 70 m/min recommended. Can be used up to 150 m/min in lubricated conditions.)

Available chain sizes : RS35 to RS60
Hub type : 1B

RS35

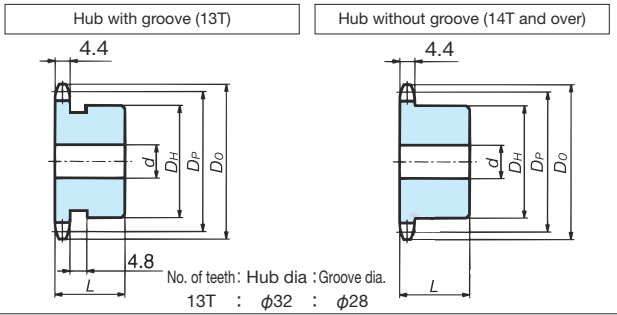

Model No.	No. of Teeth	Allowable Transmission Torque N·m	Pitch Circle Dia. Dp	Outer Dia. Do	Bore Dia. d		Hub		Approx. Mass kg
					Pilot Bore	Max.	Dia. D_H	Length L	
RS35-1B13T-P	13	5.30	39.80	44	9.5	14	32	20	0.02
RS35-1B14T-P	14	5.69	42.80	47	9.5	15	30	20	0.02
RS35-1B15T-P	15	6.08	45.81	51	9.5	17	35	20	0.02
RS35-1B16T-P	16	6.47	48.82	54	9.5	19	37	20	0.03
RS35-1B17T-P	17	6.86	51.84	57	9.5	22	41	20	0.03
RS35-1B18T-P	18	7.26	54.85	60	12.7	22	44	20	0.04
RS35-1B20T-P	20	8.04	60.89	66	12.7	27	50	20	0.05
RS35-1B22T-P	22	8.83	66.93	72	12.7	28	53	20	0.06
RS35-1B24T-P	24	9.71	72.97	78	12.7	32	60	22	0.08
RS35-1B25T-P	25	10.1	76.00	81	12.7	32	60	22	0.08
RS35-1B26T-P	26	10.5	79.02	84	12.7	35	65	22	0.09
RS35-1B28T-P	28	11.3	85.07	90	12.7	40	70	22	0.10
RS35-1B30T-P	30	12.1	91.12	96	12.7	42	75	22	0.12

RS40

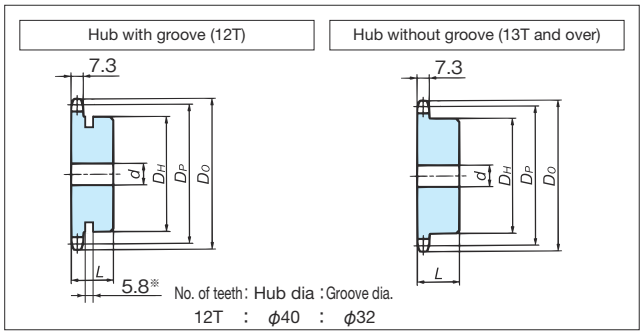

Model No.	No. of Teeth	Allowable Transmission Torque N·m	Pitch Circle Dia. Dp	Outer Dia. Do	Bore Dia. d		Hub		Approx. Mass kg
					Pilot Bore	Max.	Dia. D_H	Length L	
RS40-1B12T-P	12	10.8	49.07	55	9.5	16	40	22	0.03
RS40-1B13T-P	13	11.7	53.07	59	12.7	18	37	22	0.04
RS40-1B14T-P	14	12.6	57.07	63	12.7	22	42	22	0.04
RS40-1B15T-P	15	13.4	61.08	67	12.7	25	46	22	0.05
RS40-1B16T-P	16	14.3	65.10	71	12.7	27	50	22	0.06
RS40-1B17T-P	17	15.3	69.12	76	12.7	28	54	22	0.07
RS40-1B18T-P	18	16.2	73.14	80	12.7	30	57	22	0.08
RS40-1B20T-P	20	17.9	81.18	88	12.7	35	67	25	0.11
RS40-1B22T-P	22	19.6	89.24	96	12.7	42	75	25	0.14
RS40-1B24T-P	24	21.5	97.30	104	12.7	50	80	25	0.16
RS40-1B25T-P	25	22.4	101.33	108	12.7	50	80	25	0.17
RS40-1B26T-P	26	23.2	105.36	112	12.7	52	85	25	0.18
RS40-1B28T-P	28	25.0	113.43	120	12.7	55	90	25	0.21
RS40-1B30T-P	30	26.8	121.50	128	12.7	60	100	25	0.26

RS50

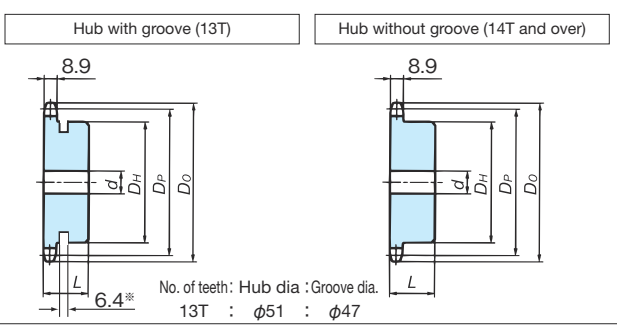

Model No.	No. of Teeth	Allowable Transmission Torque N·m	Pitch Circle Dia. Dp	Outer Dia. Do	Bore Dia. d		Hub		Approx. Mass kg
					Pilot Bore	Max.	Dia. D_H	Length L	
RS50-1B13T-P	13	22.8	66.33	74	12.7	25	51	25	0.07
RS50-1B14T-P	14	24.5	71.34	79	12.7	28	52	25	0.08
RS50-1B15T-P	15	26.2	76.35	84	12.7	30	57	25	0.09
RS50-1B16T-P	16	27.9	81.37	89	12.7	32	62	25	0.11
RS50-1B17T-P	17	29.6	86.39	94	12.7	35	67	25	0.12
RS50-1B18T-P	18	31.4	91.42	100	12.7	40	72	28	0.15
RS50-1B20T-P	20	34.8	101.48	110	15.9	50	80	28	0.20
RS50-1B22T-P	22	38.2	111.55	120	15.9	55	90	28	0.24
RS50-1B24T-P	24	41.8	121.62	130	15.9	60	100	28	0.29
RS50-1B25T-P	25	43.4	126.66	135	15.9	60	100	28	0.31
RS50-1B26T-P	26	45.2	131.70	140	18	65	110	28	0.34
RS50-1B28T-P	28	48.6	141.79	150	18	70	120	28	0.40
RS50-1B30T-P	30	52.2	151.87	161	18	70	120	28	0.43

RS60

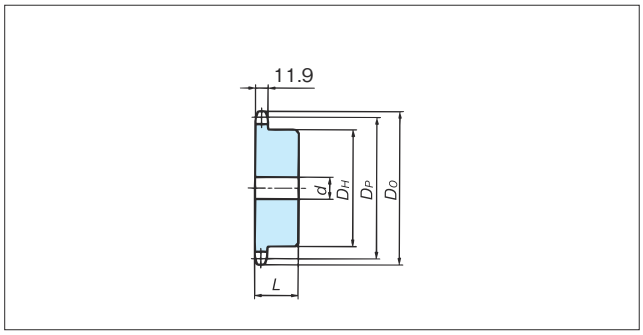

Model No.	No. of Teeth	Allowable Transmission Torque N·m	Pitch Circle Dia. Dp	Outer Dia. Do	Bore Dia. d		Hub		Approx. Mass kg
					Pilot Bore	Max.	Dia. D_H	Length L	
RS60-1B13T-P	13	41.0	79.60	89	15.9	30	57	32	0.12
RS60-1B14T-P	14	44.1	85.61	95	15.9	32	62	32	0.14
RS60-1B15T-P	15	47.2	91.63	101	15.9	35	68	32	0.16
RS60-1B16T-P	16	50.3	97.65	107	15.9	42	73	32	0.19
RS60-1B17T-P	17	53.3	103.67	113	15.9	50	80	32	0.21
RS60-1B18T-P	18	56.5	109.70	119	15.9	52	85	40	0.30
RS60-1B20T-P	20	62.7	121.78	132	15.9	60	95	40	0.38
RS60-1B22T-P	22	68.9	133.86	144	15.9	65	110	40	0.51
RS60-1B24T-P	24	75.1	145.95	156	18	70	120	40	0.57
RS60-1B25T-P	25	78.3	151.99	162	18	70	120	40	0.59
RS60-1B26T-P	26	81.4	158.04	168	18	70	120	40	0.62
RS60-1B28T-P	28	87.6	170.14	181	18	70	120	40	0.65
RS60-1B30T-P	30	93.8	182.25	193	18	70	120	40	0.70

Delivery: All models are made-to-order.

Sprockets for Free Flow Chain

Sprockets for Double Plus Chain (steel) Same as for Double Plus Chain with snap cover

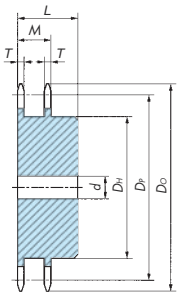

Model Numbering Example

RF2030 VRP -10T -Q

- Size
- Double Plus chain
- No. of teeth: 10
- Teeth hardening
  - **Q**: Hardened
  - [Blank]: Unhardened

Tsubaki Sprocket No.	No. of Actual Teeth	Pitch Dia. D_P	Outer Dia. (D_O)	Tooth Width T	Total Tooth Width M	Bore Dia. d		Hub Dia. D_H	Total Width L	Approx. Mass kg	Material
						Pilot Bore	Max.				
RF2030VRP-10T	10	61.65	63	3.0	15.3	12.7	20	37	25	0.2	Machine-structural carbon steel
RF2040VRP-10T	10	82.20	85	4.0	20.4	15.9	32	52	40	0.8	
RF2050VRP-10T	10	102.75	107	5.0	25.5	15.9	45	66	45	1.5	
RF2060VRP-10T	10	123.30	128	6.0	30.5	19	55	81	50	2.5	
RF2080VRP-10T	10	164.39	172	12.0	47.5	23	72	110	67	7.0	

Note: 1. The teeth are unhardened on standard-spec models. (You can choose to have them hardened.)
2. Unhardened teeth models are stock items, and hardened teeth models are made to order.
3. We can also manufacture stainless steel sprockets having the same dimensions as above.

Sprockets for Double Pitch Chain with Top Rollers (steel)

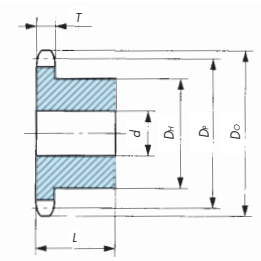

Model Numbering Example

RF2040R -1B 1200T -TR

- Size
- Hub type
- No. of teeth: 12
- Top roller

Tsubaki Sprocket No.	Roller Type	No. of Effective Teeth	Pitch Dia. D_P	Outer Dia. (D_O)	Tooth Width T	Bore Dia. d		Hub Dia. D_H	Total Width L	Approx. Mass kg	Material
						Pilot Hole	Max.				
RF2040R-1B 1100T-TR	R roller	11	90.16	97	7.3	12.7	42	63	25	0.7	Machine-structural carbon steel
RF2040R-1B 1200T-TR		12	98.14	105						0.8	
RF2040R-1B 1300T-TR		13	106.14	114						0.9	
RF2050R-1B 1100T-TR		11	112.70	124	8.9	15.9	48	73	28	1.2	
RF2050R-1B 1200T-TR		12	122.67	134		18				1.3	
RF2050R-1B 1300T-TR		13	132.67	144						1.4	
RF2060R-1B 1100T-TR		11	135.24	150	11.9	18	55	83	45	2.5	
RF2060R-1B 1200T-TR		12	147.21	162						2.8	
RF2060R-1B 1300T-TR		13	159.20	175						3.0	
RF2080R-1B 1100T-TR		11	180.31	199	15	28	75	107	45	4.6	
RF2080R-1B 1200T-TR		12	196.28	216						5.2	
RF2080R-1B 1300T-TR		13	212.27	232						5.8	
RF2100R-1B 1100T-TR		11	225.39	244	18	33	80	117	56	7.8	

Note: 1. The teeth are not hardened on any model.
2. All models are non-stock items.
3. RS sprockets can be used with Double Pitch Chain (S roller) or when the number of effective teeth of the sprocket is 15 or more (number of actual teeth: 30).

Sprockets for Free Flow Chain

Sprockets for RS Chain with Outboard Rollers (Steel)

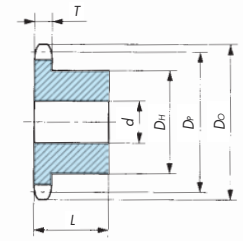

(Machined)

Model Numbering Example

RS40 -1B 9T Q -SR

- Size
- No. of teeth: 9
- Hardened teeth
- Outboard roller

Tsubaki Sprocket No.	No. of Teeth	Pitch Dia. D_P	Outer Dia. D_O	Tooth Width T	Bore Dia. d		Hub Dia. D_H	Total Width L	Approx. Mass kg	Material
					Pilot Bore	Max.				
RS40-1B 9TQ-SR	9	37.13	43	7.3	9.5	10	20	22	0.1	Machine-structural carbon steel
RS40-1B 10TQ-SR	10	41.10	47			11	24		0.1	
RS40-1B 11TQ-SR	11	45.08	51			14	28		0.1	
RS40-1B 12TQ-SR	12	49.07	55			16	32		0.2	
RS40-1B 13TQ-SR	13	53.07	59		12.7	20	36		0.2	
RS40-1B 14TQ-SR	14	57.07	63			22	40		0.3	
RS40-1B 15TQ-SR	15	61.08	67			26	44		0.3	
RS40-1B 16TQ-SR	16	65.10	71			28	48		0.4	
RS40-1B 17TQ-SR	17	69.12	76			32	52		0.4	
RS40-1B 18TQ-SR	18	73.14	80			35	56		0.5	
RS40-1B 19TQ-SR	19	77.16	84			38	60		0.5	
RS40-1B 20TQ-SR	20	81.18	88			42	64	25	0.7	
RS40-1B 21TQ-SR	21	85.21	92			44	68		0.8	
RS40-1B 22TQ-SR	22	89.24	96			46	72		0.9	
RS40-1B 23TQ-SR	23	93.27	100			50	76		1.0	
RS50-1B 9TQ-SR	9	46.42	53	8.9	9.5	12	26	25	0.2	
RS50-1B 10TQ-SR	10	51.37	58			16	31		0.2	
RS50-1B 11TQ-SR	11	56.35	64		12.7	20	36		0.3	
RS50-1B 12TQ-SR	12	61.34	69			23	41		0.3	
RS50-1B 13TQ-SR	13	66.33	74			27	46		0.4	
RS50-1B 14TQ-SR	14	71.34	79			31	51		0.5	
RS50-1B 15TQ-SR	15	76.35	84			35	56		0.6	
RS50-1B 16TQ-SR	16	81.37	89			38	61		0.7	
RS50-1B 17TQ-SR	17	86.39	94			43	66		0.8	
RS50-1B 18TQ-SR	18	91.42	100			46	71	28	1.0	
RS60-1B 9TQ-SR	9	55.70	64	11.9	9.5	16	32	32	0.4	
RS60-1B 10TQ-SR	10	61.65	70		12.7	20	37		0.3	
RS60-1B 11TQ-SR	11	67.62	76			26	44		0.5	
RS60-1B 12TQ-SR	12	73.60	83			30	50		0.6	
RS60-1B 13TQ-SR	13	79.60	89		15.9	35	56		0.8	
RS80-1B 9TQ-SR	9	74.26	85	15	15.9	26	44	40	0.7	
RS80-1B 13TQ-SR	13	106.14	118		19	50	76		1.7	
RS80-1B 15TQ-SR	15	122.17	135			62	92		2.4	
RS100-1B 10TQ-SR	10	102.75	117	18	18	40	62	50	1.7	
RS100-1B 11TQ-SR	11	112.70	127		23	46	72		2.1	
RS100-1B 12TQ-SR	12	122.67	138			52	81		2.6	

Note: 1. The teeth are hardened on all models.
2. All models are non-stock items.
3. Models other than those listed above can be used with RS sprockets.

Fit Bore

Model Numbering Example

Chain Model Number	Additional Machining

RF2060R-1B1200T — H 030 N - J08D2 M06 - K

- H: Shaft Bore Tolerance
- 030: Shaft bore dia. mm
- N: Shaft Bore Chamfer
- J: Keyway Width Tolerance
- D2: Tapped Hole Drilling
- M06: Tapped hole size
- K: Surface Treatment

Shaft Bore Tolerance	Shaft Bore Chamfer	Keyway Width Tolerance	Tapped Hole Drilling	Surface Treatment
H : H7 G : G7 M : M7	N : Tsubaki standard (see table below) A : C1 B : C2 C : C3	W : None New JIS J : Js9 P : P9 Old JIS F : F7 E : E9	0 : None 1 : One hole over keyway 2 : One hole over keyway + 90° to right 3 : One hole over keyway + 120° to right 4 : One hole over keyway + 120° to left 5 : One hole over keyway + 90° to left	[Blank] : None B : Blackening K : Autocatalytic nickel-phosphorus coating C : Electroplated zinc coating

Chain Model Number (Available Sizes)

RS sprockets

- 1-strand: RS35 to RS240
- 2-strand (2B): RS40 to RS120
- SD: RS40 to RS80
- 1-strand stainless steel: RS35 to RS80
- Sprockets for BS/DIN chain

Double Pitch sprockets

- S rollers/R rollers Set for each steel/stainless steel model.

Sprockets for Double Plus chain

- RF2030VRP to RF2080VRP

Shaft Bore Machining

① Shaft bore tolerance

Tsubaki standard

- G ➡ G7
- H ➡ H7
- M ➡ M7 Note: Grade 7 only.

② Shaft bore diameter

Bore machining

③ Chamfer symbol

- N ➡ Tsubaki standard (see right table)
- A ➡ C1
- B ➡ C2
- C ➡ C3

Applicable shaft bore dia. (mm)	Chamfer amount
10 to 20	C1
21 to 32	C1.2
33 to 50	C1.6
51 to 80	C2.5
81 to 170	C3

Available chamfers

Shaft bore dia.	Available chamfer amounts			
10 to 17	N	A	–	–
18 to 44	N	A	B	–
45 to 170	N	A	B	C

Keyway/tap

④ Keyway width tolerance and grade

Tsubaki standard

- J ➡ Js9
- F ➡ F7
- P ➡ P9
- E ➡ E9
- W ➡ No keyway

⑥ Number of taps and arrangement

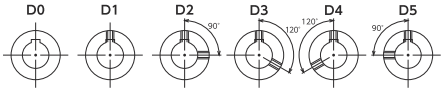

⑦ Tapped hole size

Specify using a 2-digit integer.

- With set screw

- For no taps, specify D0 M00.
- Tapped hole sizes larger or smaller than Tsubaki standard size are available. However, for size M4 or larger, make sure not to exceed keyway width (details below).

⑤ Keyway width

Specify using a 2-digit integer. (JIS compliant)

- For no keyway, specify W 00.
- Keyway size can be selected only for Js9 and P9 (new JIS). Minimum and maximum keyway size overlap in the applicable shaft bore range can also be selected.

Keyway machining

Tapped hole drilling

For Js9/P9 (new JIS standards)

Applicable shaft bore dia. (mm)	Keyway width (mm)	Tsubaki standard size	Available sizes
10 to 12	4	M4	—
12 to 17	5	M5	M4
17 to 22	6	M6	M5
22 to 30	8	M6	M5, M8
30 to 38	10	M8	M6, M10
38 to 44	12	M8	M6, M10
44 to 50	14	M8	M6, M10
50 to 58	16	M10	M8, M12
58 to 65	18	M10	M8, M12

Applicable shaft bore dia. (mm)	Keyway width (mm)	Tsubaki standard size	Available sizes
65 to 75	20	M12	M10, M16
75 to 85	22	M12	M10, M16
85 to 95	25	M16	M12, M20
95 to 110	28	M16	M12, M20
110 to 130	32	M20	M16
130 to 150	36	M20	M16
150 to 170	40	M20	M16
170 to (200)	45	M24	M20

For F7/E9 (old JIS standards)

Applicable shaft bore dia. (mm)	Keyway width (mm)	Tsubaki standard size	Available sizes
10 to 13	4	M4	—
14 to 20	5	M5	M4
21 to 30	7	M6	M5
31 to 40	10	M8	M6, M10
41 to 50	12	M8	M6, M10
51 to 60	15	M8	M6, M10
61 to 70	18	M10	M8, M12
71 to 80	20	M12	M10, M16
81 to 95	24	M12	M10, M16

Applicable shaft bore dia. (mm)	Keyway width (mm)	Tsubaki standard size	Available sizes
96 to 110	28	M16	M12, M20
111 to 125	32	M20	M16
126 to 140	35	M20	M16
141 to 160	38	M20	M16
161 to 170	42	M20	M16

⑧ Surface treatment

- B ➡ Blackening
- K ➡ Autocatalytic nickel-phosphorus coating
- C ➡ Electroplated zinc coating

Note: Blackening is also applied to additionally machined portions (bore, keyway, tapped hole).

Fit Bore BR Type

Model Numbering Example

Chain Model Number	Additional Machining

RF2060S-1B1012T — BR001 - H 06007 W N - K

Shape	Housing Bore Tolerance	Bearing Nominal Number	Number of Bearings	With/without Bearing	Surface Treatment
BR001	H : H7	"0" + bearing nominal number	W : Two	N : Without bearing	[Blank] : None B : Blackening K : Autocatalytic nickel-phosphorus coating C : Electroplated zinc coating

Chain Model Number (Available Sizes)

RS sprockets	▶ 1-strand RS35 to RS160
Double Pitch sprockets	▶ RF2040 to RF2160 S rollers ▶ RF2040 to RF2100 R rollers
Sprockets for Double Plus chain	▶ RF2030VRP to RF2080VRP

Machining

The sprocket bore is machined so that single-row deep-groove ball bearings can be inserted from both ends (right diagram).

Note: Bearings are not included. Please purchase them separately.

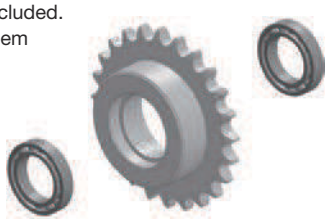

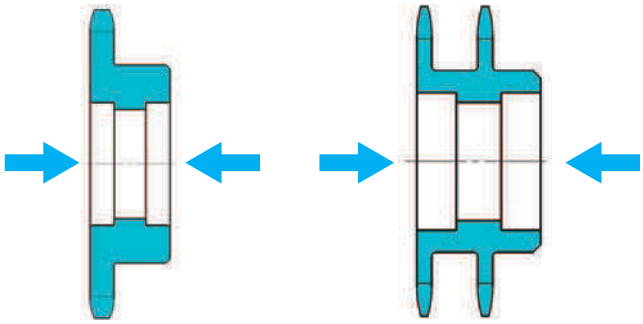

Visit the Tsubaki Power Transmission Products Information Site for diagrams and a list of selectable bearings. https://tt-net.tsubakimoto.co.jp/tecs/top/index.asp

Product page example

Double Pitch sprocket Fit Bore

BR type main specifications

RS2060S-1B□T■-BR001-H0□□□□WN

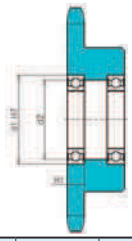

Principal dimensions ①

Base model no.	No. of teeth	No. of actual teeth	Applicable shaft dia. *d* mm	Pitch dia. *DP* mm	Outer dia. *DO* mm	Hub outer dia. *DH* mm	Hub length *L* mm
RF2060S-1B912T■-BR001-H0□□□□WN	9½	19	20,25,30,35,40	117.34	126	83	40
RF2060S-1B1012T■-BR001-H0□□□□WN	10½	21	20,25,30,35,40	129.26	138	83	40

Model no.	Bearing: Inner dia. mm	Bearing: Nominal	Load kN	Speed r/min	L10 life h	Basic static load rating safety factor	Housing bore: d1 mm	d2 mm	H1 mm	PDF outline drawing
RF2060S-1B1012T-BR001-H06204WN	20	6204	3.14	50	20034	2.1	47	42	14	PDF
RF2060S-1B1012TQ-BR001-H06204WN										PDF
RF2060S-1B1012T-BR001-H06205WN	25	6205	3.14	50	24645	2.5	52	47	15	PDF
RF2060S-1B1012TQ-BR001-H06205WN										PDF

②③

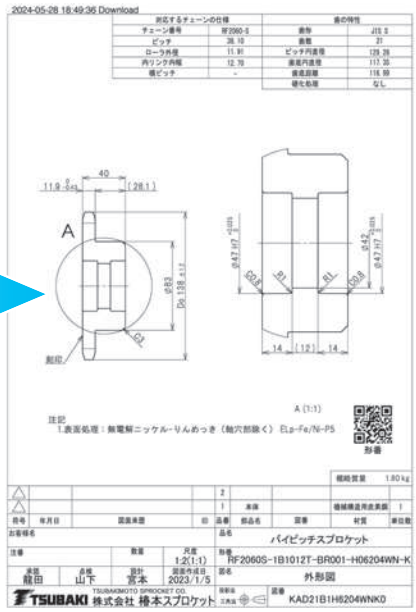

How to designate a model number

① Select the sprocket model number.
② Confirm the bearing inner diameter.
③ Select the bearing nominal number.

RS2060S-1B1012T-BR001-H0□□□□WN-K

Note: Fill in the four-digit bearing nominal number in the blank squares □.

Fit Bore

Fit Bore Items

From among available models, you can specify shaft bore machining, keyway machining, and tapped hole drilling.
Some models can also be given a surface treatment.
See the Tsubaki Power Transmission Products Information Site for applicable BR type Fit Bore sprockets.

Double Pitch Sprockets

	Steel														Stainless Steel						
Roller Type	S							R							S				R		
Model/No. of Teeth	RF2040S	RF2050S	RF2060S	RF2080S	RF2100S	RF2120S	RF2160S	RF2040R	RF2050R	RF2060R	RF2080R	RF2100R	RF2120R	RF2160R	RF2040S	RF2050S	RF2060S	RF2080S	RF2040R	RF2050R	RF2060R
912T	◎	◎	◎	◎	◎	◎	◎								○	○	○	○			
1000T								◎	◎	◎	◎										
1012T	◎	◎	◎	◎											○	○	○	○			
1100T								◎	◎	◎	◎	◎	○	○					○	○	○
1112T	◎	◎	◎	◎											○	○	○	○			
1200T	◎	◎	◎	◎				◎	◎	◎	◎				○	○	○	○	○	○	○
1212T	◎	◎	◎	◎											○	○	○	○			
1300T								◎	◎	◎	◎								○	○	○
1400T								◎	◎	◎	◎										
1500T								◎	◎	◎	◎										
1600T								◎	◎	◎	◎										

Sprockets for Double Plus Chain

Model/No. of Teeth	Steel				
	RF2030VRP	RF2040VRP	RF2050VRP	RF2060VRP	RF2080VRP
10T	○	○	○	○	△

RS Sprockets (Applicable models other than those listed below are also available.)

Model/ No. of Teeth	Steel									Stainless Steel					Model/ No. of Teeth
	35	40	50	60	80	100	120	140	160	35	40	50	60	80	
	1B	1B	1B	1B	1B	1B	1B	1B	1B	1B	1B	1B	1B	1B	
9	◎	◎	◎	◎	○										9
10	◎	◎	◎	◎	○	○	○	○	○	○	○	○	○	○	10
11	◎	◎	◎	◎	○	○	○	○	○	○	○	○	○	○	11
12	◎	◎	◎	◎	○	○	○	○	○	○	○	○	○	○	12
13	◎	◎	◎	◎	○	○	○	○	○	○	○	○	○	○	13
14	◎	◎	◎	◎	○	○	○	○	○	○	○	○	○	○	14
15	◎	◎	◎	◎	○	○	○	○	○	○	○	○	○	○	15
16	◎	◎	◎	◎	○	○	○	○	○	○	○	○	○	○	16
17	◎	◎	◎	◎	○	○	○	○	○	○	○	○	○	○	17
18	◎	◎	◎	◎	○	○	○	○	○	○	○	○	○	○	18
19	◎	◎	◎	◎	○	○	○	○	○	○	○	○	○	○	19
20	◎	◎	◎	◎	○	○	○	○	○	○	○	○	○	○	20
21	◎	◎	◎	◎	○	○	○	○	○	○	○	○	○	○	21
22	◎	◎	◎	◎	○	○	○	○	○	○	○	○	○	○	22
23	◎	◎	◎	◎	○	○				○	○	○	○	○	23
24	◎	◎	◎	◎	○	○	○	○	○	○	○	○	○	○	24
25	◎	◎	◎	◎	○	○	○	○	○	○	○	○	○	○	25
26	◎	◎	◎	◎	○	○	○	○	○	○	○	○	○		26
27	◎	◎	◎	◎	○	○				○	○	○	○		27
28	◎	◎	◎	◎	○	○	○			○	○	○	○		28
30	◎	◎	◎	◎	○	○	○	○	○	○	○	○	○		30
32	◎	◎	◎	◎	○	○	○			○	○	○			32
34	◎	◎	◎	◎	○					○	○	○			34
35	◎	◎	◎	◎	○	○	○	○	○	○	○	○			35
36	◎	◎	◎	◎	○	○	○			○	○	○			36
38	◎	◎	◎	◎	○					○	○	○			38
40	◎	◎	◎	◎	○	○	○	○		○	○	○			40
42	◎	◎	◎	◎	○										42
45	◎	◎	◎	◎	○	○	○								45
48	◎	◎	◎	○	○	○	○								48
50	◎	◎	◎	○	○										50
54	◎	◎	◎	○	○	○									54
60	◎	◎	○	○	○	○									60
65	◎	◎	○	○	○										65
70	◎	◎	○	○	○										70
75	◎	○	○	○	○										75

◎…Models to which a surface treatment can be applied ○…Models for which shaft bores can be machined (no surface treatments)
△…Models for which shaft bores can be machined (limited machining options apply)
■ Models with hardened teeth ■ Models without hardened teeth (and not suitable for teeth to be hardened)
□ Models without hardened teeth (but optional teeth hardening can be applied)

On the Tsubaki Power Transmission Products Information Site, you'll find a model number generator and downloadable schematic diagrams for Fit Bore.

https://tt-net.tsubakimoto.co.jp HOME > Download drawings > Sprocket / Pin gear drive > RS sprocket Fit bore

Drawing Library　Fit Bore Sprocket

※ Selection of each condition to be from top to bottom.
※ After set all the search conditions, the model number is displayed.

	Type	○ RS sprocket (Material: Steel) ○ RS sprocket (Material: Stainless steel) ○ Sprockets for BS/DIN Chains (Material: Steel) ◉ Sprockets for Double Pitch Chains (Material: Steel) ○ Sprockets for Double Pitch Chains (Material: Stainless steel) ○ Sprockets for Double Plus Free Flow Chains ○ Sprockets
1	Chain size	RF2060
	Roller type	○ S ◉ R
2	Hub Type	-1B
3	Number of teeth	1200T
4	Tooth hardening	◉ Non-heat treated ○ Tooth hardening(Q)
	Finishing Category	III : Bore+keyway+tap hole finishing
5	Shaft Bore Diameter	30
6	Shaft bore tolerance	◉ H7 (Standard) ○ G7 ○ M7
7	Chamfer dimensions	C1.2(Standard)
8	Keyway tolerance	◉ Js9 (New JIS) (Standard) ○ P9 (New JIS) ○ F7 (Old JIS) ○ E9 (Old JIS)
9 10	Keyway Width	8(Standard) ※Keyway depth is TSUBAKI Star (see the drawing)
11	Tap pattern	2:On the Keyway and 90°Right Side(Standard) ※with set s
12	Tap size	M6(Standard)
13	Surface treatment	○ NO ○ B : Coated black ◉ K : Electroless nickel phosphorus plating ○ C : Zinc Electroplated Coating

Selected model No. : RF2060R-1B1200T-H030N-J08D2M06-K　Display the

Model No. : RF2060R-1B1200T-H030N-J08D2M06-K

PDF Outline Drawing (Japanese)

Model No. : RF2060R-1B1200T-H030N-J08D2M06-K

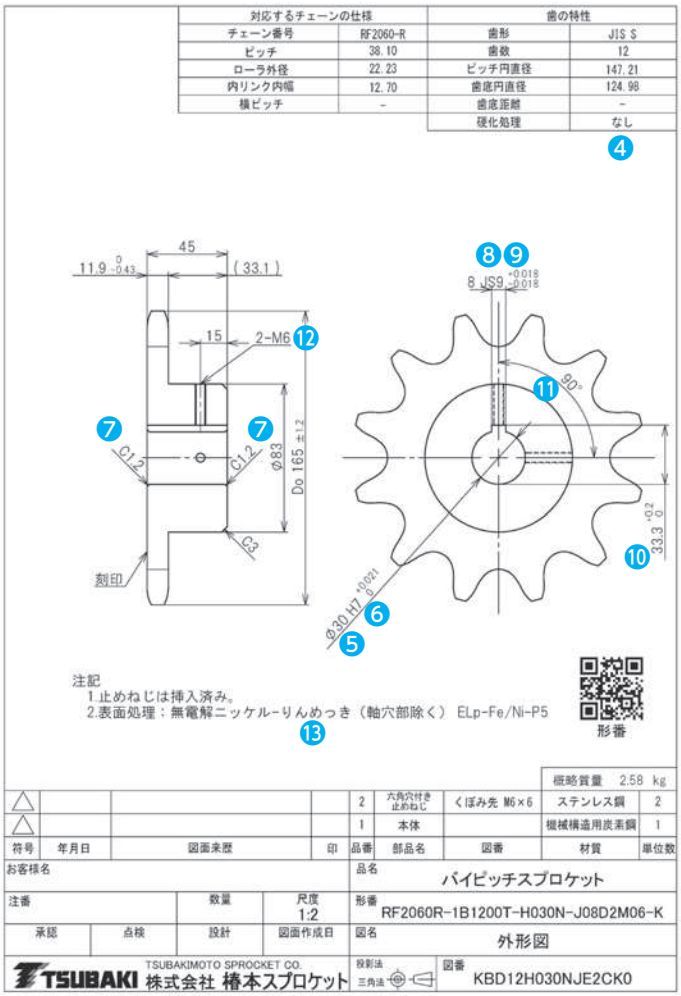

Engineering Manual

Small Size Conveyor Chain Selection 142

Small Size Conveyor Chain Selection Example 147

Free Flow Chain Selection 148

Free Flow Chain Selection Example 151

Design Information on Double Plus Chain Conveyors 153

Design Information on Film Gripper Chain (KUM) Conveyors 156

Conveyor Design Guidelines 157

Free Flow Chain Guidelines for Use 160

Installation 162

How to Cut Chain 163

How to Connect Chain 167

Lubrication 170

Tension Adjustment 171

Trial Run 172

Inspection 172

Usage Limits 173

Other Precautions 173

Troubleshooting 174

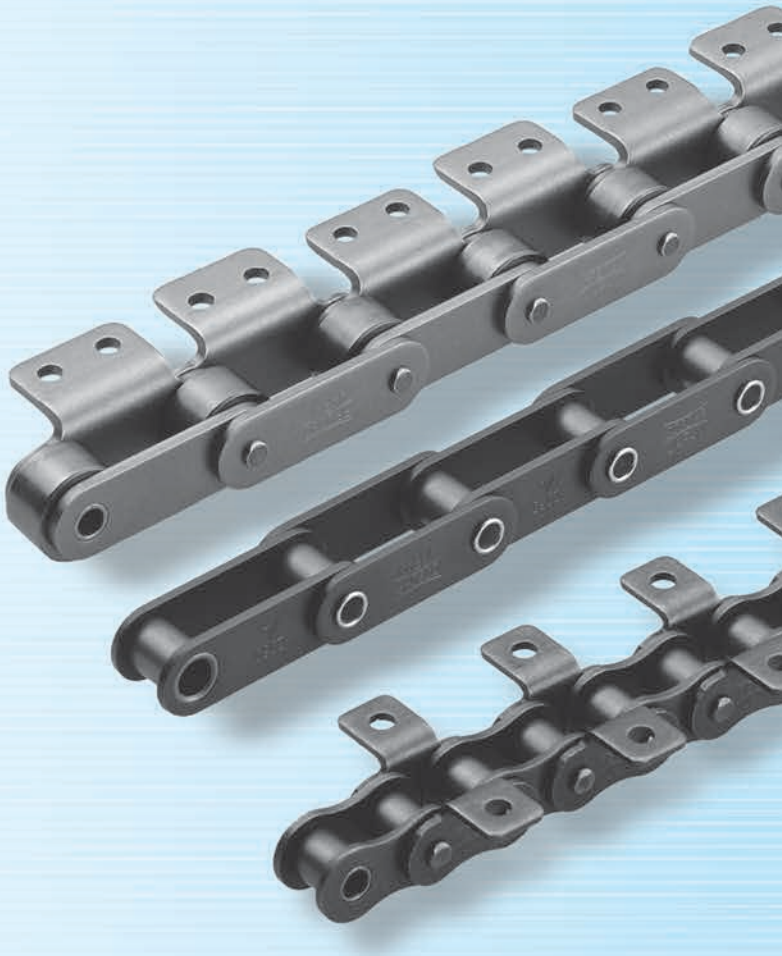

Selection

Small Size Conveyor Chain Selection

An appropriate chain size and type can be selected based upon the type and capacity of the conveyor. In some cases, it may be difficult to determine the most appropriate chain size and type, since there are a variety of operating conditions for the conveyor. The general procedure for chain selection is as follows:

1. Check Conveyance Conditions → 2. Tentatively Determine Chain Type → 3. Check Allowable Load of Rollers and Attachments → 4. Calculate Maximum Chain Load → **5. Determine Chain Size** ⇢ 6. How to Select Chain for Indexing Drive

Step 1: Check Conveyance Conditions

1. Type of conveyor (slat conveyor, bucket elevator, etc.)
2. Direction of chain travel (horizontal, inclined, or vertical conveyor)
3. Type, mass, and size of materials to be conveyed
4. Conveyor capacity, interval between conveyed objects
5. Conveying speed
6. Conveyor length
7. Lubrication status
8. Considerations for special environments (high/low temperature, presence of corrosive substances)

Step 2: Tentatively Determine Chain Type

Use the following formula to determine maximum static chain load (F) for tentative selection of chain type.

SI Units $F(kN) = W \times f_1 \times K_V \times \frac{G}{1000}$

Gravimetric Units $F\{kgf\} = W \times f_1 \times K_V$

W : Total mass {weight} of conveyed objects on conveyor kg{kgf}
f_1 : Coefficient of friction (Table 3) K_V = Speed coefficient (Table 4)
G : 9.80665m/s^2

Tentatively select a chain that has maximum allowable load of F (for two parallel strands, use F X 0.6) or more.

Step 3: Check Allowable Load

The load applied to rollers or attachments should not exceed the allowable loads shown in Table 1 and Table 2.

■ **Table 1: Base Chain Allowable Roller Load** Unit: kN {kgf}/roller

Size	Double Pitch RS Attachment (Standard) Lambda/X-Lambda		Stainless Steel Roller (SS, HS, AS)		Plastic Roller		Heat-Resistant Plastic Roller KV	Low-Noise Plastic Roller	Poly Steel Chain
	R Roller	S Roller	R Roller	S Roller	R Roller	S Roller	R Roller	R Roller	
RS25	—	—	—	—	—	—	—	—	0.005{0.5}
RS35	—	—	—	—	—	—	—	—	0.015{1.5}
RF2040·RS40	0.64{ 65}	0.15{ 15}	0.20{ 20}	0.05{ 5}	0.20{ 20}	0.02{2}	0.20{20}	0.14{14}	0.02 {2.0}
RF2050·RS50	0.98{100}	0.20{ 20}	0.29{ 30}	0.06{ 6}	0.29{ 30}	0.03{3}	0.29{30}	0.21{21}	0.04 {4.0}
RF2060·RS60	1.57{160}	0.29{ 30}	0.49{ 50}	0.09{ 9}	0.49{ 50}	0.05{5}	0.49{50}	0.34{35}	0.06 {6.0}
RF2080·RS80	2.65{270}	0.54{ 55}	0.79{ 80}	0.15{15}	0.88{ 90}	0.09{9}	—	0.62{63}	—
RF2100·RS100	3.92{400}	0.78{ 80}	1.17{120}	0.25{25}	1.27{130}	—	—	—	—
RF2120·RS120	5.88{600}	1.18{120}	1.77{180}	0.34{35}	—	—	—	—	—
— ·RS140	—	1.32{135}	—	0.39{40}	—	—	—	—	—
RF2160·RS160	9.61{980}	1.91{195}	2.75{280}	0.54{55}	—	—	—	—	—

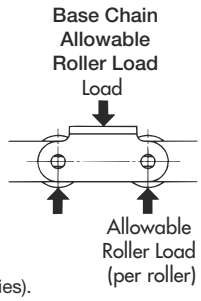

Note: 1. Values are for lubricated chain. Values for Double Pitch and RS Attachment Chain include corrosion-resistant chains (NP/NEP series).
2. The above values for Poly Steel Chain represent the allowable load for each plastic inner link.
3. The material used for standard R roller guide rail should be a high tensile strength material at least S45C (JIS), 1045 (AISI) or better.
4. See page 83 for details on Bearing Cage Chain and Bearing Bush Chain.

■ **Table 2: A Attachment Allowable Load** Unit: kN {kgf}/roller

Double Pitch Chain			RS Chain		
Size	Double Pitch*	Stainless Steel	Size	Attachment*	Stainless Steel
RF2040	0.262{ 26.7}	0.108{ 11.0}	RS25	0.028{ 2.9}	0.012{ 1.2}
RF2050	0.455{ 46.4}	0.189{ 19.3}	RS35	0.094{ 9.6}	0.036{ 3.7}
RF2060	1.06 {108 }	0.419{ 42.7}	RS40	0.130{ 13.3}	0.054{ 5.5}
RF2080	1.67 {170 }	0.646{ 65.9}	RS50	0.243{ 24.8}	0.101{ 10.3}
RF2100	2.51 {256 }	1.15 {117 }	RS60	0.376{ 38.3}	0.148{ 15.1}
RF2120	3.68 {375 }	1.79 {183 }	RS80	0.591{ 60.3}	0.233{ 23.8}
RF2160	5.84 {596 }	3.13 {319 }	RS100	0.933{ 95.1}	0.361{ 36.8}
			RS120	1.39 {142 }	0.629{ 64.1}
			RS140	1.82 {186 }	0.869{ 88.6}
			RS160	2.36 {241 }	1.19 {121 }

- ◆ The mounting hole of an A attachment is regarded as the point where the allowable vertical load acts on the attachment.
- ◆ For K attachments, double the values shown for A attachments.
- ◆ Load should not exceed maximum allowable roller load.

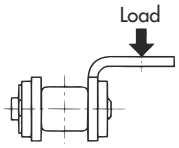

Note: 1. * Includes corrosion-resistant chain (NP/NEP series).
2. See page 83 for details on Bearing Cage Chain and Bearing Bush Chain.

Selection

Step 4: Calculate Maximum Chain Load (F)

In this catalog, values are indicated in both SI and gravimetric units. The weight (kgf) used to calculate the max. load in the gravimetric units is the same value as the mass (kg).

F : Max. static load applied to chain : kN {kgf}
V : Conveying speed (chain speed) : m/min
H : Center distance between sprockets (vertical direction) : m
L : Center distance between sprockets (horizontal direction) : m
C : Center distance between sprockets : m
M : Mass {weight} of moving parts (chain*, bucket, apron, etc.) : kg/m {kgf/m}
W : Total mass {weight} of conveyed objects on conveyor (max. value) : kg {kgf}
For countable items: $W = \frac{C}{\text{Loading interval}} \times$ Mass {weight} of conveyed items
kW : Power required
f_1 : Coefficient of friction between chain and guide rail (Table 3)
η : Transmission efficiency of drive unit
G : Gravitational acceleration: 9.80665 m/s²

■ Table 3-1:
f_1: Coefficient of Friction of Base Chain Rollers Rolling on Rail

Roller Type	Steel Roller		Lambda Chain	Plastic Roller*	Low-Noise Plastic Roller	Bearing Bush Chain
	Dry	Lubricated		Dry		Dry
R roller	0.12	0.08	0.08	0.08	0.1	0.21
S roller	0.21	0.14	0.14	—	—	

Note: * Includes heat-resistant plastic rollers.

■ Table 3-2:
f_1: Coefficient of Friction of Base Chain Plates Sliding on Rail

Steel Plate		Plastic Roller
Dry	Lubricated	
0.3	0.2	0.25

* When two strands of chain are used in parallel, the chain mass will be that of two strands of chain.

Note: If frequent forward and reverse operation is required, take-up is necessary to remove chain slack, so the following calculation does not apply. When removing slack in a chain by take-up, please refer to the Q&A available on the webpage below.
Tsubaki Power Transmission Products Information Site <https://tt-net.tsubakimoto.co.jp> Home > Q&A > Large size conveyor chain > Q6

Formula

SI Units	{Gravimetric Units}

Horizontal Conveyance
Goods are directly loaded on the conveyor

$$F=(W+2.1\times M\times C)\times f_1\times\frac{G}{1000}$$

$$kW=\frac{F\times V}{60}\times\frac{1}{\eta}$$

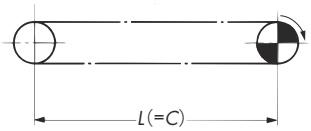

$$F=(W+2.1\times M\times C)\times f_1$$

$$kW=\frac{F\times V}{6120}\times\frac{1}{\eta}$$

Vertical Conveyance

$$F=(W+M\times C)\times\frac{G}{1000}$$

$$kW=\frac{W\times V}{60}\times\frac{G}{1000}\times\frac{1}{\eta}$$

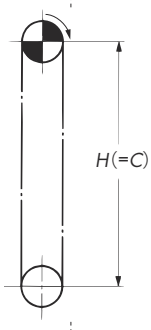

$$F=W+M\times C$$

$$kW=\frac{W\times V}{6120}\times\frac{1}{\eta}$$

Inclined Conveyance*
Goods are directly loaded on the conveyor

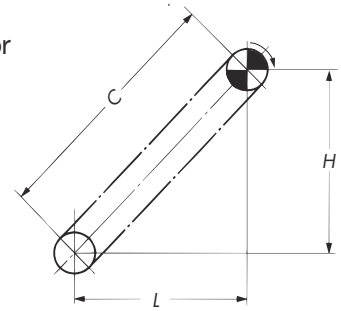

$$F=\left\{(W+M\times C)\frac{L\times f_1+H}{C}+1.1\times M\times(L\times f_1-H)\right\}\times\frac{G}{1000}$$

$$kW=\frac{V}{60}\left\{F-M\times(H-L\times f_1)\frac{G}{1000}\right\}\times\frac{1}{\eta}$$

$$F=(W+M\times C)\frac{L\times f_1+H}{C}+1.1\times M\times(L\times f_1-H)$$

$$kW=\frac{V}{6120}\left\{F-M\times(H-L\times f_1)\right\}\times\frac{1}{\eta}$$

* When calculating the value for F, if L x f_1–H<0, make L x f_1–H=0. Also when calculating the value for kW, if H–L x f_1<0, make H–L x f_1=0.

SI Units	{Gravimetric Units}

Horizontal/Inclined Conveyance*
Goods are directly loaded on the conveyor

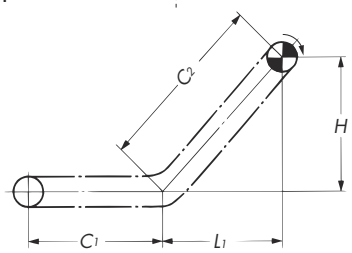

$$F=\left\{\left(\frac{W}{C_1+C_2}+2.1\times M\right)C_1\times f_1+\left(\frac{W}{C_1+C_2}+M\right)\times(L_1\times f_1+H)+1.1\times M\times(L_1\times f_1-H)\right\}\times\frac{G}{1000}$$

$$kW=\frac{V}{60}\times\left\{F-M\times(H-L_1\times f_1)\times\frac{G}{1000}\right\}\times\frac{1}{\eta}$$

$$F=\left(\frac{W}{C_1+C_2}=2.1\times M\right)\times C_1\times f_1=\left(\frac{W}{C_1+C_2}+M\right)\times(L_1\times f_1=H)=1.1\times M(L_1\times f_1-H)$$

$$kW=\frac{V}{6120}\left\{F-M\times(H-L_1\times f_1)\right\}\times\frac{1}{\eta}$$

* When calculating the value for F, if L_1 x f_1–H<0, make L_1 x f_1–H=0. Also when calculating the value for kW, if H–L_1 x f_1<0, make H–L_1 x f_1=0.

Step 5: Determine Chain Size

Multiply the maximum load (F) applied to a chain by the speed coefficient (Kv) given in Table 4 for a chain that satisfies the following formula:

$$F \times K_V \leqq \text{Max. Allowable Load}$$

Table 4: Speed Coefficient (Kv)

Chain Speed m/min	Speed Coefficient K_V	Chain Speed m/min	Speed Coefficient K_V
15 or less	1.0	70 to 90	2.2
15 to 30	1.2	90 to 110	2.8
30 to 50	1.4	110 to 120	3.2
50 to 70	1.6		

The recommended speed of the following chains is as follows:

Bearing Cage Chain
Bearing Bush Chain
Indexing Table Chain, Mini Tact Chain
: 30 m/min or less

Plastic Roller Chain : 70 m/min or less
Poly Steel Chain : 70 m/min or less

Table 5: Small Size Conveyor Chain Strength (Unit: kN {kgf})

Double Pitch Chain Strengths

Double Pitch Chain, Lambda Chain (including LMC and NP), X-Lambda Chain (Maximum Allowable Load)

Size	General Use	Lambda X-Lambda
RF2040	2.65{ 270}	2.65{ 270}
RF2050	4.31{ 440}	4.31{ 440}
RF2060	6.28{ 640}	6.28{ 640}
RF2080	10.7 {1090}	10.7 {1090}
RF2100	17.1 {1740}	17.1 {1740}
RF2120	23.9 {2440}	23.9 {2440}
RF2160	40.9 {4170}	—

Corrosion Resistant Small Size Conveyor Chain (Maximum Allowable Load)

Size	Stainless Steel Double Pitch Chain					Surface-Treated Double Pitch Chain	
	SS	HS	AS	NS	LSK	NP	NEP
RF2040	0.69{ 70}	1.19{121}	0.69{ 70}	0.44{ 45}	0.44{ 45}	2.65{ 270}	2.65{ 270}
RF2050	1.03{105}	1.85{189}	1.03{105}	0.69{ 70}	0.69{ 70}	4.31{ 440}	4.31{ 440}
RF2060	1.57{160}	2.78{283}	1.57{160}	1.03{105}	1.03{105}	6.28{ 640}	6.28{ 640}
RF2080	2.65{270}	4.77{486}	2.65{270}	1.77{180}	—	10.7 {1090}	10.7 {1090}
RF2100	2.55{260}	—	—	—	—	17.1 {1740}	17.1 {1740}
RF2120	3.82{390}	—	—	—	—	23.9 {2440}	—
RF2160	6.37{650}	—	—	—	—	40.9 {4170}	—

Selection

Plastic Roller Chain (Maximum Allowable Load)

Size	General Use				Low Noise			Heat Resistant
	Standard	NP	SS	SP Roller	Standard	NP	SS	
RF2040	0.44{ 45}	0.44{ 45}	0.44{ 45}	0.23{ 23}	0.44{ 45}	0.44{ 45}	0.44{ 45}	0.44{ 45}
RF2050	0.69{ 70}	0.69{ 70}	0.69{ 70}	0.34{ 34}	0.69{ 70}	0.69{ 70}	0.69{ 70}	0.69{ 70}
RF2060	1.03{105}	1.03{105}	1.03{105}	0.54{ 55}	1.03{105}	1.03{105}	1.03{105}	1.03{105}
RF2080	1.77{180}	1.77{180}	1.77{180}	0.88{ 89}	1.77{180}	1.77{180}	1.77{180}	—
RF2100	2.55{260}	2.55{260}	2.55{260}	—	—	—	—	—

Hollow Pin Chain (Maximum Allowable Load)

Size	General Use	LMC	NP	SS
RF2040	1.77{180}	1.47{150}	1.77{180}	0.44{ 45}
RF2050	3.14{320}	2.55{260}	3.14{320}	0.69{ 70}
RF2060	4.22{430}	3.43{350}	4.22{430}	1.03{105}
RF2080	7.65{780}	6.18{630}	7.65{780}	1.77{180}

Curved Chain (Max. Allowable Load)

Size	General Use
RF2040	1.86{190}
RF2050	2.84{290}
RF2060	4.02{410}
RF2080	6.96{710}

Bearing Bush Chain (Maximum Allowable Load)

Size	Standard	High Precision	Stainless Steel
RF2040	0.78{ 80}	0.78{ 80}	0.44{ 45}
RF2050	1.27{130}	1.27{130}	0.69{ 70}
RF2060	1.77{180}	1.77{180}	1.03{105}
RF2080	2.94{300}	2.94{300}	1.77{180}

Bearing Cage Chain

Size	Max. Allowable Load
RF2040	0.45{ 45}
RF2050	0.69{ 70}
RF2060	1.03{105}
RF2080	1.77{180}

Mini Tact Chain

Size	Max. Allowable Load
BCM12.5-9	0.3{ 30}
BCM15-9	0.3{ 30}

Indexing Table Chain

Size	Max. Allowable Load
BC050	0.49{ 50}
BC075	0.69{ 70}
BC100	0.69{ 70}
BC150	1.27{130}

RS Chain Strengths

RS Attachment Chain, Lambda Chain (including LMC and NP), X-Lambda Chain (Maximum Allowable Load)

Size	General Use	Lambda	X-Lambda
RS25	0.64{ 65}	—	—
RS35	1.52{ 155}	1.52{ 155}	—
RS40	2.65{ 270}	2.65{ 270}	2.65{ 270}
RS50	4.31{ 440}	4.31{ 440}	4.31{ 440}
RS60	6.28{ 640}	6.28{ 640}	6.28{ 640}
RS80	10.7 {1090}	10.7 {1090}	10.7 {1090}
RS100	17.1 {1740}	17.1 {1740}	17.1 {1740}
RS120	23.9 {2440}	23.9 {2440}	—
RS140	32.4 {3300}	32.4 {3300}	—
RS160	40.9 {4170}	—	—

Corrosion Resistant Small Size Conveyor Chain (Maximum Allowable Load)

Size	Stainless Steel RS Attachment Chain					Surface-Treated RS Attachment Chain		Poly Steel Chain	Plastic Roller Chain
	SS	HS	AS	NS	LSK	NP	NEP		SP Roller
RS25	0.12{ 12}	—	—	0.12{ 12}	—	0.64{ 65}	—	0.08{ 8}	—
RS35	0.26{ 27}	—	—	0.26{ 27}	—	1.52{ 155}	—	0.18{18}	—
RS40	0.69{ 70}	1.19{121}	0.69{ 70}	0.44{ 45}	0.44{ 45}	2.65{ 270}	2.65{ 270}	0.44{45}	0.23{23}
RS50	1.03{105}	1.85{189}	1.03{105}	0.69{ 70}	0.69{ 70}	4.31{ 440}	4.31{ 440}	0.69{70}	0.34{35}
RS60	1.57{160}	2.78{283}	1.57{160}	1.03{105}	1.03{105}	6.28{ 640}	6.28{ 640}	0.88{90}	0.54{55}
RS80	2.65{270}	4.77{486}	2.65{270}	1.77{180}	—	10.7 {1090}	10.7 {1090}	—	0.88{89}
RS100	3.82{390}	—	—	—	—	17.1 {1740}	17.1 {1740}	—	—
RS120	3.82{390}	—	—	—	—	23.9 {2440}	—	—	—
RS140	4.61{470}	—	—	—	—	32.4 {3300}	—	—	—
RS160	6.37{650}	—	—	—	—	40.9 {4170}	—	—	—

Hollow Pin Chain (Maximum Allowable Load)

Size	General Use	Lambda	NP	SS
RS40	1.77{180}	1.47{150}	1.77{180}	0.44{ 45}
RS50	3.14{320}	2.55{260}	3.14{320}	0.69{ 70}
RS60	4.22{430}	3.43{350}	4.22{430}	1.03{105}
RS80	7.65{780}	6.18{630}	7.65{780}	1.77{180}

Curved Chain (Max. Allowable Load)

Size	General Use
RS40	1.86{190}
RS50	2.84{290}
RS60	4.02{410}
RS80	6.96{710}

Note: 1. SS and NS chains are not pre-lubricated before shipping. Always lubricate the chain before use, except when using underwater or when the chain will contact water.
2. Using a chain without lubrication may result in premature articulation problems.
3. Maximum allowable loads are based on lubricated (including water lubricated) conditions.

Step 6: How to Select Chain for Indexing Drive

When selecting chain for indexing operations using indexing equipment, in addition to the normal load based on F (load from frictional force), the added load from inertia (F_1) must be taken into account when calculating the total load acting on the chain. In general, this additional load F_1 is found from the formula $F_1 = m\alpha$. The steps to calculate chain load based on this formula are explained below.

m: Total mass on driven side (kg)
α: Maximum acceleration (m/s^2)

SI Units	{Gravimetric Units}

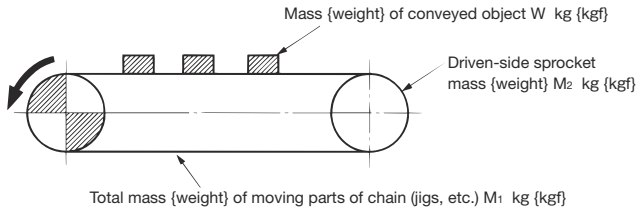

1) Find total mass "m" on driven side.

$$m = W + M_1 + \frac{1}{2}M_2$$

Note: $\frac{1}{2}M_2$ is an approximate calculated value for the inertial force of the sprocket converted to the mass (weight) of the chain.

2) Find the additional load from inertia from $F_1 = m\alpha$ based on the maximum acceleration α (m/s^2) and the formula in 1) above.
For example, when using a cam indexing system, maximum acceleration α can be found by using the following formula:

$$\alpha = Am\frac{L}{t^2}\ (m/s^2)$$

L: Indexing length of 1 takt (m)
t: Indexing time of 1 takt (s)
Am: Dimensionless maximum acceleration (Table 6)
Use the value for Am corresponding to the cam curve.

Table 6: Relationship Between Cam Curves and Am

Name	Am
Modified sine curve (MS)	±5.53
Modified trapezoidal curve (MT)	±4.89
Modified sine constant velocity curve (MSC)	±8.01

For details, check with the manufacturer of the indexing equipment.

3) Find F_Σ, the total working load taking the additional tension due to inertia into consideration.

$$F_\Sigma = F + F_1/1000$$

F: Chain load based on frictional force (kN) (Maximum static tension)

3) Find F_Σ, the total working load taking the additional tension due to inertia into consideration.

$$F_\Sigma = F + F_1/\underline{G}$$

F: Chain load based on frictional force (kgf) (Maximum static tension)

G: Gravitational acceleration 9.80665 (m/s^2)

4) Determine chain size.

$F_\Sigma Kv \leqq$ Maximum allowable load of chain
Kv: Speed coefficient (Table 4)

5) Check the allowable roller load of the chain.

Selection

Small Size Conveyor Chain Selection Example

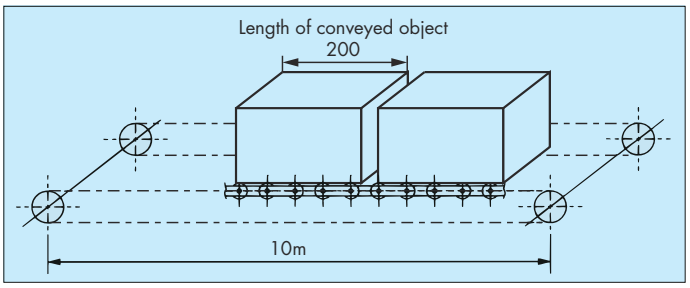

Step 1: Check conveyance conditions

Type of conveyor: Horizontal 2-axis transport slat conveyor
Center distance between sprockets: 10 m
Slat mass: 0.5 kg/piece
Slat attachment: On every link
Number of chain strands: 2
Mass of conveyed object: 35 kg x 50 pieces = 1750 kg
Dimensions of conveyed object: W150 x H150 x L200 mm
Conveying speed (chain speed): 15 m/min
Lubrication: Yes
Corrosive factors: None
Temperature: Normal
Roller type: Double Pitch S rollers

Step 2: Tentatively determine chain type

A coefficient of friction of f_1 = 0.14, as shown in Table 3-1 is used, considering cases in which the rollers of the base chain roll on the rails on both the conveying side and the return side.

Speed coefficient of K_v = 1.0 based on Table 4

F = 1750 kg × 0.14 × 1.0 × G/1000 = 2.40 kN

Since the chain will be used in parallel, choose a chain with a maximum allowable load of at least 2.40 kN × 0.6 = 1.44 kN.

Tentatively select the RF2040S since the RF2040's maximum allowable load is 2.65 kN, which is greater than 1.44 kN.

Step 3: Check allowable load

• Roller allowable load

The number of effective rollers is equal to the conveyed object length divided by the chain pitch, which is 200 / 25.4 = 7.8, so use the number 7.

The total number is 14 as 2 strands will be used, but 7 are considered effective as a result of uneven load distribution.

Roller load = (35 kg/7 + 0.5 kg/piece) × G/1000 = 0.054 kN/piece

Since the allowable load for the RF2040 S roller is 0.15 kN per roller based on Table 1, **the RF2040S can be used**.

• Attachment allowable load

Since slats will be installed on every link, tentatively select an attachment spacing of 1LA2.

As with the roller allowable load, use 7 for the number of effective attachments.

Attachment load = 0.054 kN/piece

Since the allowable load for the RF2040 A attachment is 0.262 kN per attachment based on Table 2, **the RF2040S-1LA2 can be used**.

Step 4: Calculate maximum chain load

RF2040S-1LA2 approx. mass = 0.51 kg/m + 0.003 kg/piece × 1000 mm/25.4 mm = 0.63 kg/m

Slat approx. mass = 0.5 kg/piece × 1000 mm/25.4 mm = 19.7 kg/m

F = {1750 kg + 2.1 × (0.63 kg/m × 2 strands + 19.7 kg/m) × 10 m} × 0.14 × G/1000 = 3.01 kN

Step 5: Determine chain size

3.01 kN × 1.2 = 3.61 kN

Multiplying 3.61 kN by 0.6 yields 2.17 kN, which is less than the RF2040's maximum allowable load of 2.65 kN, **so the RF2040S-1LA2 can be used.**

Free Flow Chain Selection

Step 1: Check Conveyance Conditions

① Type, mass, dimensions, and quantity of the conveyed objects (including pallet)

② Conveying speed

③ Conveyor length (length of accumulating and conveying sections)

④ Environment

Step 2: Select Chain Type

Select the base chain and roller type according to the operating conditions and environment.

Step 3: Tentatively Determine Chain Type

Perform tentative checking of chain load.

SI units : $F = 9.80665 \times W_T \times f \times K_V/1000$

Gravimetric units : $F = W_T \times f \times K_V$

> Note: In this catalog, values are indicated in both SI and gravimetric units. The weight (kgf) used to calculate the max. load F in the gravimetric units is the same value as the mass (kg).

F : Max. tension applied to chain kN {kgf}

W_T : Total mass of conveyed objects excluding chain kg

f : Coefficient of friction f_2 (Table 8)+ f_3 (Table 9)

Kv : Speed coefficient (Table 13)

When two chains arranged in parallel are used, their working loads will be unequal. Allowing for the imbalance of working loads, determine the model and size of a chain tentatively to ensure the maximum allowable load (Tables 14 and 15) of the chain is F×0.6 or more.

■ Table 7: f_1 : Coefficient of Friction Between Chain and Rail During Conveyance

Chain Type	Type of Base Chain Roller		Dry	Lubricated
Double Plus Chain	Plastic roller	A/B/C/D UA/UB	0.08	—
	Steel roller		—	0.05
Center Roller Chain	Steel roller		—	0.08
Outboard Roller Chain Top Roller Chain	Steel roller	S roller	(0.21)	0.14
		R roller	(0.12)	0.08
	Plastic roller	S roller	—	—
		R roller	0.08	—
Poly Steel Chain	—		0.25	—

Figures inside ( ) are given for reference purposes.

■ Table 8 : f_2: Coefficient of Friction Between Chain and Conveyed Objects During Accumulation

Chain Type	Type of Transfer Roller	Dry	Lubricated
Double Plus Chain	A/C/UA	0.10	—
	B/D/UB	0.15	—
	Steel roller	—	0.10
Center Roller Chain	Steel roller	—	0.06
Outboard Roller Chain	Plastic outboard roller	0.06	—
	Outboard roller with plastic brake	0.20*	—
	Steel outboard roller	(0.09)	0.06
Top Roller Chain	Plastic top roller	0.06	—
	Steel top roller	(0.09)	0.06

Figures inside ( ) are given for reference purposes.

Note: Coefficient of friction for each outboard roller with plastic brake. When the number of brake outboard rollers accounts for about one third of the total number of outboard rollers, the coefficient of friction is 0.1. (Refer to "Installation of Outboard Rollers" on page 104.)

■ Table 9: f_3 : Coefficient of Friction Between Chain and Rail During Accumulation

Chain Type	Type of Base Chain Roller		Dry	Lubricated
Double Plus Chain	A/C/UA		0.20	—
	B/D/UB		0.25	—
	Steel roller		—	0.10
Center Roller Chain	Steel roller		—	0.10
Outboard Roller Chain Top Roller Chain	Steel roller	S roller	(0.21)	0.14
		R roller	(0.12)	0.08
	Plastic roller	S roller	—	—
		R roller	0.08	—
Poly Steel Chain	—		0.25	—

Figures inside ( ) are given for reference purposes.

Coefficient of Friction: Reference Diagram of f_1, f_2, and f_3

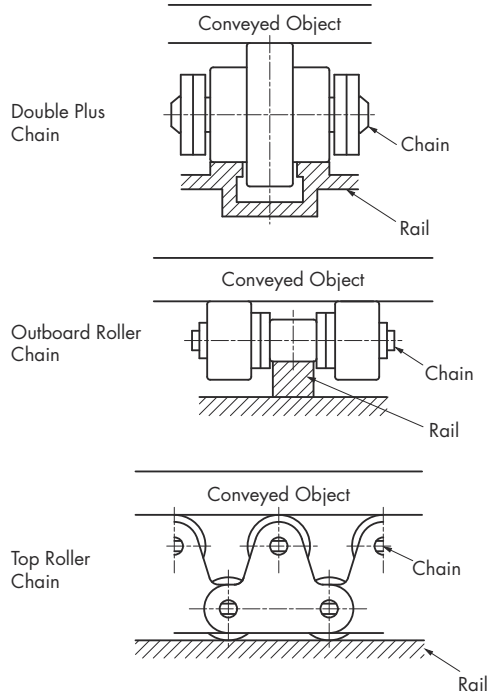

Selection

Step 4: Check Allowable Roller Load

The load applied on the roller should not exceed the values given below. The values for steel rollers assume lubricated conditions.

1. Double Plus Chain and Center Roller Chain

Allowable Roller Load

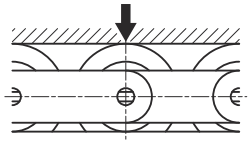

■ RF2030 to RF2080

The values given below are the allowable conveying load per two strands of chain (allowable load per one meter of pallet).

■ Table 10: Allowable Roller Load

Unit: kN {kgf}/m

Roller / Frame / Size	Plastic Roller		Steel Roller
	Aluminum Frame	Aluminum Frame with Steel Rail	
RF2030	0.39{ 40}	0.78{ 80}	1.57{160}
(Urethane roller)	0.20{ 20}	0.20{ 20}	—
RF2040	0.59{ 60}	1.18{120}	2.35{240}
RF2050	0.78{ 80}	1.57{160}	3.14{320}
RF2060	0.98{100}	1.96{200}	3.92{400}
RF2080	—	2.94{300}	5.88{600}

2. Outboard Roller Chain and Top Roller Chain

Confirm the allowable loads of outboard rollers, top rollers, and base chain rollers.

1) Allowable Load of Outboard Roller and Top Roller

Allowable Load of Outboard Roller

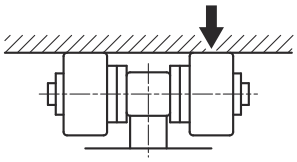

Allowable Load of Top Roller

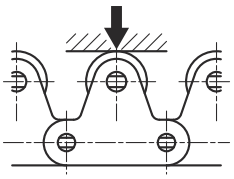

■ Table 11: Allowable Roller Load

Unit: kN {kgf}/roller

Size	Outboard Roller and Single-Strand Top Roller			Double-Strand Top Roller
	Plastic Roller	Steel Roller	Stainless Steel Roller	Steel Roller
RF2040·RS40	0.05{ 5}	0.15{15}	0.05{ 5}	0.29{ 30}
RF2050·RS50	0.07{ 7}	0.20{20}	0.06{ 6}	0.39{ 40}
RF2060·RS60	0.10{10}	0.29{30}	0.09{ 9}	0.59{ 60}
RF2080·RS80	0.18{18}	0.54{55}	0.15{15}	1.08{110}
RF2100·RS100	0.29{30}	0.78{80}	0.25{25}	1.57{160}

Note: The allowable load of Lambda rollers is the same as that of steel rollers.

2) Allowable Load of Base Chain Roller

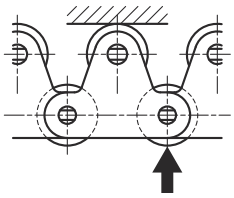

Allowable Load of Base Chain Roller

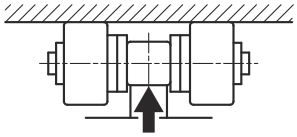

Allowable Load of Base Chain Roller

■ Table 12: Allowable Load of Base Chain Roller

Unit: kN {kgf}/roller

Size	Steel Roller		Plastic Roller	Poly Steel
	R Roller	S Roller	R Roller	
RF2040·RS40	0.64{ 65}	0.15{15}	0.20{ 20}	0.02{2}
RF2050·RS50	0.98{100}	0.20{20}	0.29{ 30}	0.04{4}
RF2060·RS60	1.57{160}	0.29{30}	0.49{ 50}	0.06{6}
RF2080·RS80	2.65{270}	0.54{55}	0.88{ 90}	—
RF2100·RS100	3.92{400}	0.78{80}	1.27{130}	—

Size	Stainless Steel Roller	
	R Roller	S Roller
RF2040·RS40	0.20{ 20}	0.05{ 5}
RF2050·RS50	0.29{ 30}	0.06{ 6}
RF2060·RS60	0.49{ 50}	0.09{ 9}
RF2080·RS80	0.78{ 80}	0.15{15}
RF2100·RS100	1.17{120}	0.25{25}

Note:
1. The above values for Poly Steel Chain represent the allowable load for each plastic inner link.
2. The allowable load of Lambda Chain is the same as that of steel roller chain.
3. The material used for steel R roller guide rail should be a high tensile strength material at least S45C (JIS), 1045 (AISI) or better.
4. The plastic roller includes heat-resistant type rollers (KV type).

Step 5 : Calculate Chain Load (F)

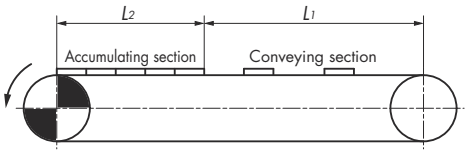

SI Units :

$$F = \frac{G}{1000} \times \{(W_1 + M) \times L_1 \times f_1 + W_2 \times L_2 \times f_2 + (W_2 + M) \times L_2 \times f_3 + 1.1 \times M \times (L_1 + L_2) \times f_1\}$$

$$kW = \frac{F \cdot W}{60} \times 1.1 \times \frac{1}{\eta}$$

Gravimetric Units :

$$F = (W_1 + M) L_1 \cdot f_1 + W_2 \cdot L_2 \cdot f_2 + (W_2 + M) \times L_2 \cdot f_3 + 1.1M\ (L_1 + L_2)\ f_1$$

$$kW = \frac{F \cdot V}{6120} \times 1.1 \times \frac{1}{\eta}$$

F : Maximum load applied to chain : kN {kgf}
L_1 : Length of conveying section : m
W_1 : Mass of conveyed objects in conveying section : kg/m
L_2 : Length of accumulating section : m
W_2 : Mass of conveyed objects in accumulating section : kg/m
f_1 : Coefficient of friction between chain and rail during conveyance
f_2 : Coefficient of friction between chain and conveyed objects during accumulation
f_3 : Coefficient of friction between chain and rail during accumulation
M : Mass of chain : kg/m
kW : Power required : kW
V : Chain speed : m/min
η : Transmission efficiency of drive unit
G : Gravitational acceleration: 9.80665 m/s^2

Since the free flow conveyor uses two strands of chain generally laid in parallel, the chain mass is assumed to be that of two strands of chain. Consequently, "F" in the above formula represents the maximum chain load applied to two strands of chain. Allowing for the imbalance of the working loads, it is assumed that a load of 0.6 F is applied to a single strand.

Step 6: Determine Chain Size

Multiply the maximum load (0.6 F) applied to a single strand of chain by the speed coefficient (Kv) given in Table 13 for a chain that satisfies the following formula:

0.6 F × Kv ≦ Maximum allowable chain load

■ Table 13: Speed Coefficient (Kv)

Chain Speed m/min	Speed Coefficient Kv	Chain Speed m/min	Speed Coefficient Kv
15 or less	1.0	70 to 90	2.2
15 to 30	1.2	90 to 110	2.8
30 to 50	1.4	110 to 120	3.2
50 to 70	1.6		

The recommended speed of the following chains is as follows :

Double Plus Chain : 5 to 15 m/min or less
Plastic R roller chain : 70 m/min or less
Poly Steel Chain : 70 m/min or less

■ Table 15: Max. Allowable Chain Load (2)

Unit: kN {kgf}

Chain Type	Outboard Roller Chain				Single-Strand Top Roller Chain		
Size	Steel Roller	Plastic R Roller	Poly Steel	Stainless Steel Roller	Steel Roller	Plastic R Roller	Stainless Steel Roller
RS40 RF2040	2.65 {270}	0.44 {45}	0.44 {45}	0.69 {70}	2.65 {270}	0.44 {45}	0.69 {70}
RS50 RF2050	4.31 {440}	0.69 {70}	0.69 {70}	1.03 {105}	4.31 {440}	0.69 {70}	1.03 {105}
RS60 RF2060	6.28 {640}	1.03 {105}	0.88 {90}	1.57 {160}	6.28 {640}	1.03 {105}	1.57 {160}
RS80 RF2080	10.7 {1090}	1.77 {180}	—	2.65 {270}	10.7 {1090}	1.77 {180}	2.65 {270}
RS100	17.1 {1740}	2.55 {260}	—	3.82 {390}	17.1 {1740}	2.55 {260}	3.82 {390}
RF2100				2.55 {260}			2.55 {260}

Note: 1. The allowable load of Lambda Chain is the same as that of steel roller chain.
2. The max. allowable load of double-strand top roller chain is 1.7 times that of single-strand top roller chain (1.4 times for Lambda Chain).

■ Table 14: Max. Allowable Chain Load (1)

Unit: kN {kgf}

Size & Roller Type / Base Chain Type \ Roller Type		A/C/ UA	B/D/ UB
RF2030VRP	Standard	0.55{ 56}	0.27{ 28}
	HCP		
	Lambda		
	SS	0.27{ 28}	
RF2040VRP	Standard	0.88{ 90}	0.44{ 45}
	HCP		
	Lambda		
	SS	0.44{ 45}	
RF2050VRP	Standard	1.37{140}	0.69{ 70}
	HCP		
	Lambda		
	SS	0.69{ 70}	
RF2060VRP	Standard	2.06{210}	1.03{105}
	HCP		
	Lambda		
	SS	1.03{105}	
RF2080VRP	Standard	5.30{540}	2.65{270}
	HCP		
	Lambda		
	SS	2.65{270}	

Size & Roller Type / Base Chain Type \ Roller Type		Steel (Double Plus Chain)	Center Roller (Equal Speed)
RF2030VR	Standard	0.98{100}	—
RF2040VR·CR	Standard	1.57{160}	1.57{160}
RF2050VR·CR	Standard	2.45{250}	2.45{250}
RF2060VR·CR	Standard	3.73{380}	3.73{380}
RF2080VR·CR	Standard	5.30{540}	5.30{540}

Selection

Free Flow Chain Selection Example

Double Plus chain

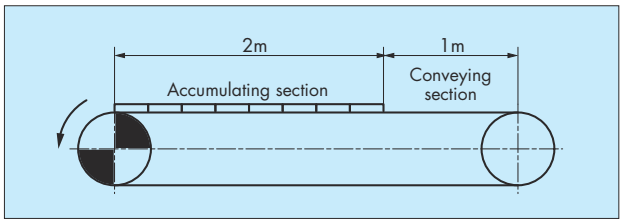

Step 1: Check conveyance conditions

Type of conveyor: Horizontal 2-axis transport free flow conveyor
Length of conveying section: 1 m
Length of accumulating section: 2 m
Mass of conveyed object (including pallet): 10 kg/piece
Max. number of objects in accumulating section: 8
Length of conveyed object: 250 mm
Number of chain strands: 2

Conveying speed: 17 m/min
Chain speed: 6.8 m/min
Lubrication: None
Corrosive factors: None
Temperature: Normal
Chain type: Double Plus chain

Step 2: Select chain type

Based on non-lubricated, non-corrosive, and normal operating temperature conditions, **select Double Plus chain (standard type) for the base chain and VRPA for the rollers.**

Step 3: Tentatively determine chain type

Under non-lubricated conditions:

Coefficient of friction between chain and conveyed objects during accumulation from Table 8: $f_2 = 0.10$

Coefficient of friction between chain and rail during accumulation from Table 9: $f_3 = 0.20$

Speed coefficient of $K_V = 1.0$ based on Table 13

F = 9.80665 × (10 kg/piece × 8 pieces) × (0.10 + 0.20) × 1.0/1000 = 0.24 kN

Tentatively select a chain with a maximum allowable load of F × 0.6 = 0.24 × 0.6 = 0.14 kN or greater considering imbalance in working load as the chains will be used in a two-strand configuration.

Tentatively select the RF2030VRPA from Table 14.

Step 4: Check allowable roller load

Assume accumulation of up to 8 objects. This figure is determined based on the allowable load per meter of pallet length.

The load per meter of accumulating section is equal to the roller load of 10 kg × 8 objects / 2 m × G / 1000 = 0.392 kN/m.

As shown in Table 10, **the RF2030VRPA and aluminum frame with steel rail can be used.**

Step 5 : Calculate chain load (F)

Calculate the load assuming accumulation of up to 8 objects.

Mass of conveyed object in conveying section = 0 kg/m

Mass of conveyed object in accumulating section = (10 kg × 8 pieces)/2 m = 40 kg/m

As shown in Table 7, the coefficient of friction between the chain and rail during conveyance is $f_1 = 0.08$.

RF2030VRPA approx. mass = 0.6 kg/m

F = G/1000 × {(0 kg/m + 0.6 kg/m × 2 strands) × 1 m × 0.08 + 40 kg/m × 2 m × 0.10 + (40 kg/m + 0.6 kg/m × 2 strands) × 2 m × 0.20 + 1.1 × 0.60 kg/m × 2 strands × (1 m + 2 m) × 0.08} = 0.24 kN

Step 6: Determine chain size

0.24 kN × 0.6 × 1.0 = 0.14 kN

0.14 kN is less than the RF2030VRPA's maximum allowable load of 0.55 kN, **so the RF2030VRPA can be used**.

Top roller chain

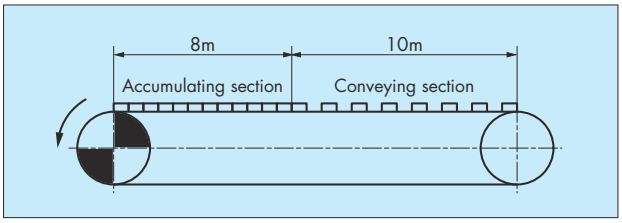

Step 1: Check conveyance conditions

Type of conveyor: Horizontal 2-axis transport free flow conveyor
Length of conveying section: 10 m
Length of accumulating section: 8 m
Mass of conveyed object (including pallet): 100 kg/piece
Max. number of objects in conveying section: 8
Max. number of objects in accumulating section: 12
Pallet dimensions: W600 x H100 x L600 mm
Number of chain strands: 2
Conveying speed (chain speed): 15 m/min
Lubrication: Yes
Corrosive factors: None
Temperature: Normal
Chain type: Double Pitch R rollers, top roller chain

Step 2: Select chain type

Based on lubricated, non-corrosive, and normal operating temperature conditions, **select steel rollers (standard type) for both the top and base chain rollers**.

Step 3: Tentatively determine chain type

Under lubricated conditions:
Coefficient of friction between chain and conveyed objects during accumulation from Table 8: f_2 = 0.06
Coefficient of friction between chain and rail during accumulation from Table 9: f_3 = 0.08
Speed coefficient of K_V = 1.0 based on Table 13
F = 9.80665 × (100 kg/piece × 20 pieces) × (0.06 + 0.08) × 1.0/1000 = 2.75 kN
Tentatively select a chain with a maximum allowable load of at least F × 0.6 = 2.75 × 0.6 = 1.65 kN or greater considering imbalance in working load as two chains will be used in parallel.
Tentatively select the RF2040R-1LTR from Table 15.

Step 4: Check allowable roller load

• Roller allowable load

The number of effective rollers is equal to the conveyed object length divided by the chain pitch, which is 600 / 25.4 = 23.6, so use the number 23.
The total number is 46 as 2 strands will be used, but 23 are considered effective as a result of uneven load distribution.
Top roller load = 100 kg/23 × G/1000 = 0.043 kN/piece
Since the allowable load for the RF2040 steel top roller is 0.15 kN per roller based on Table 11, **the RF2040R-1LTR can be used**.

• Allowable load of base chain roller

For the same reason as for the top rollers, the number of effective base chain rollers is 23. Base chain roller load = 0.043 kN/piece
Since the allowable load for the RF2040's base chain R rollers is 0.64 kN per roller based on Table 12, **the RF2040R-1LTR can be used**.

Step 5 : Calculate chain load (F)

Based on our review of conveyance conditions:
Mass of objects in conveying section = (100 kg × 8 piece)/10 m = 80 kg/m
Mass of objects in accumulating section = (100 kg × 12 pieces/8 m = 150 kg/m
As shown in Table 7, the coefficient of friction between the chain and rail during conveyance is f_1 = 0.08.
RF2040R-1LTR approx. mass = 1.69 kg/m
F = G/1000 × {(80 kg/m + 1.69 kg/m × 2 strands) × 10 m × 0.08 + 150 kg/m × 8 m × 0.06 + (150 kg/m + 1.69 kg/m × 2 strands) × 8 m × 0.08 + 1.1 × 1.69 kg/m × 2 strands × (10 m + 8 m) × 0.08} = 2.38 kN

Step 6: Determine chain size

2.38 kN × 0.6 × 1.0 = 1.43 kN
1.43 kN is less than the RF2040R-1LTR's maximum allowable load of 2.65 kN, **so the RF2040R-1LTR can be used**.

Selection

Design Information on Double Plus Chain Conveyors

Please use the dimensional information given below as reference when configuring and installing your conveyor.

1. Conveyor Ends and Sprocket Position

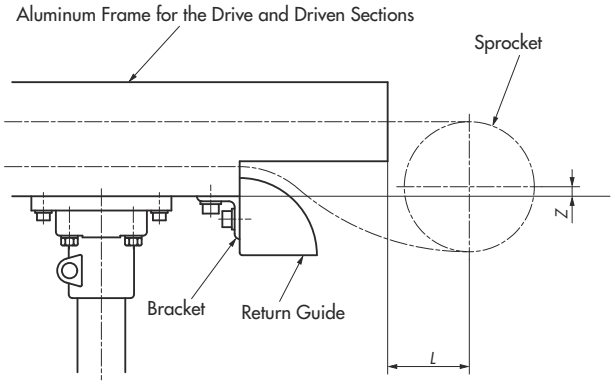

■ Table 16

Size & Roller Type	RF2030VRP	RF2040VRP	RF2050VRP
Rail No.	RF2030VRP-R2 RF2030VRP-R2S	RF2040VRP-R2 RF2040VRP-R2S	RF2050VRP-R2 RF2050VRP-R2S
Z	21.3	14.7	16.1
L	40	50	60

Size & Roller Type	RF2050VRP	RF2060VRP	RF2080VRP
Rail No.	RF2050VRP-R2HS	RF2060VRP-R2 RF2060VRP-R2S	RF2080VRP-R2S
Z	76.2	14.9	24
L	60	70	100

2. Dimensions for Machining Aluminum Frame

The rails listed on the right do not have an aluminum frame for the drive and driven sections. Add a frame for the middle section, referring to the dimensions in Table 17.

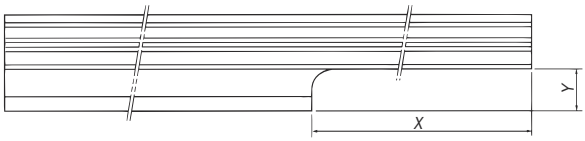

■ Table 17

Size & Roller Type	RF2050VRP
Rail No.	RF2050VRP-R2HS
X (drive side)	340
X (driven side)	120
Y	30

3. Mounting Bolt and Conveyor Height

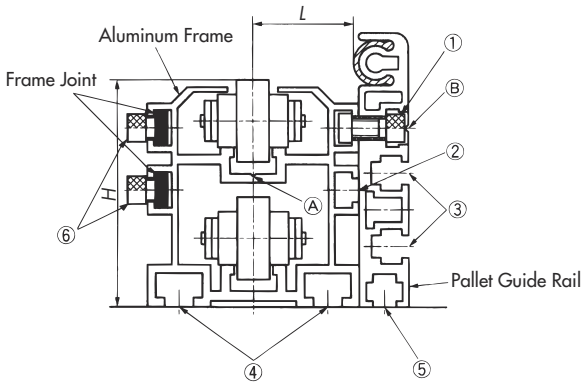

■ Table 18

Frame \ Item	①	②	③	④	⑤	⑥	H	L
RF2030VRP-R2 RF2030VRP-R2S	M6 ×10ℓ	M6	M5	M6	M5	M6 ×8ℓ	61.5	14.5
RF2040VRP-R2 RF2040VRP-R2S	M6 ×12ℓ	M6	M6	M8	M6	M6 ×8ℓ	68	28.5
RF2050VRP-R2 RF2050VRP-R2S	M8 ×20ℓ	M8	M8	M10	M8	M8 ×10ℓ	82.5	36
*RF2050VRP-R2HS	M8 ×20ℓ	M8	M8	M10	M8	M8 ×10ℓ	142.5	37
RF2060VRP-R2 RF2060VRP-R2S	M8 ×20ℓ	M8	M8	M10	M8	M8 ×10ℓ	95	44.5
RF2080VRP-R2S	M8 ×25ℓ	M8	M8	M10	M8	M8 ×12ℓ	130	47

1) Positioning Between the Aluminum Frames
Position the frames using the V groove (marked with Ⓐ in the above diagram) as a guide and secure them with bolts ④ (listed in Table 18) on the base.

2) Connecting the Aluminum Frames
After positioning is complete, the frames can be secured in position using the frame joints.*
*The frame joints are not intended for positioning between aluminum frames.

3) Installing the Pallet Guide Rail
Make a hole of an appropriate size at the V groove position marked Ⓑ in the above diagram and secure the rail using the hexagonal bolt ① listed in Table 18.

4) On models marked with * in Table 18, there is a difference of 60 mm in height between the aluminum frame and pallet guide rail. To offset the height difference, fit a collar for height adjustment under the pallet guide rail.

4. Conveyor Leg Pitch

Determine the conveyor leg pitch based on the mass of the conveyed objects and the second moment of area given in Table 19. However, ensure the conveyor layout is designed so that the frame-connecting section is supported by the legs, regardless of the second moment of area.

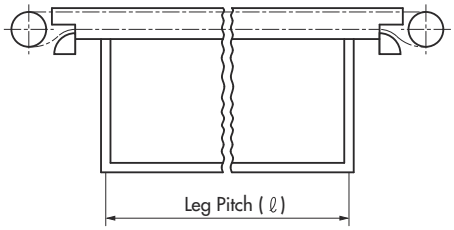

■ Calculation of Leg Pitch (ℓ)

$$\ell = \left\{ \frac{384EI}{5 \times (0.6W)} \times \delta \times 10^7 \right\}^{\frac{1}{4}} = \text{(mm)}$$

I : Second moment of area (cm^4) (See Table 19)

W : Total conveyed mass (kg/m)

δ : Slack (2mm)

E : 7.0×10^3 (kg/mm^2)

Note: The total conveyed mass (W) is not always distributed evenly between the two conveyor strands. This is taken into account with the factor (0.6).

■ Table 19

Type	Frame No.	Second Moment of Area (I) (cm^4)
Aluminum Frame	RF2030VRP-R2	17.127
	RF2040VRP-R2	40.185
	RF2050VRP-R2	84.039
	RF2060VRP-R2	135.137
Aluminum Frame with Steel Rail	RF2030VRP-R2S	17.821
	RF2040VRP-R2S	44.312
	RF2050VRP-R2S	95.623
	RF2050VRP-R2HS	442.093
	RF2060VRP-R2S	171.761
	RF2080VRP-R2S	360.726

The second moment of area (I) of the frame for the drive and driven sections is the same as given in the table above.

5. Aluminum Frame with Steel Rail

1) Cross Section

RF2030VRP

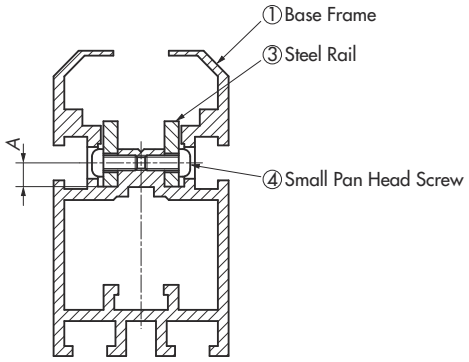

RF2040VRP to RF2080VRP

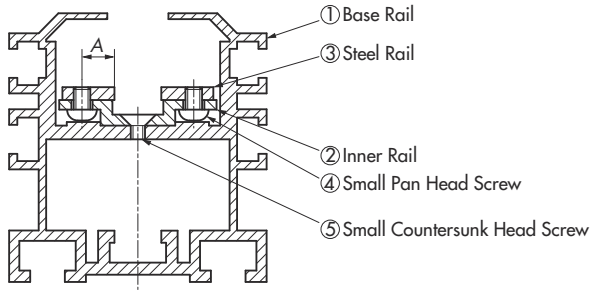

Frame No.		Steel Rail (No. 3)		Steel Rail Mounting Screw (No. 4) Cross-Recessed Pan Head Screw	Inner Rail Mounting Screw (No. 5) Cross-Recessed Countersunk Head Screw
For Middle Section	For Drive and Driven Sections	Dimensions (Plate Thickness × Width)	Dimension A		
RF2030VRP-R2S	RF2030VRP-R1SK,-R1SJ	3 × 13	4.75	M3 × 7ℓ	—
RF2040VRP-R2S	RF2040VRP-R1SK,-R1SJ	3 × 13	8.4	M4 × 5ℓ	M4 × 6ℓ
RF2050VRP-R2S	RF2050VRP-R1SK,-R1SJ	3 × 13	8.4	M4 × 6ℓ	M4 × 6ℓ
RF2050VRP-R2HS	—	3 × 13	8.4	M4 × 6ℓ	M4 × 6ℓ
RF2060VRP-R2S	RF2060VRP-R1SK,-R1SJ	3 × 13	8.4	M4 × 6ℓ	M4 × 6ℓ
RF2080VRP-R2S	RF2080VRP-R1SK,-R1SJ	6 × 16	10.5	M5 × 8ℓ	M6 × 10ℓ

Selection

2) Construction Diagram of Middle-Section Frame

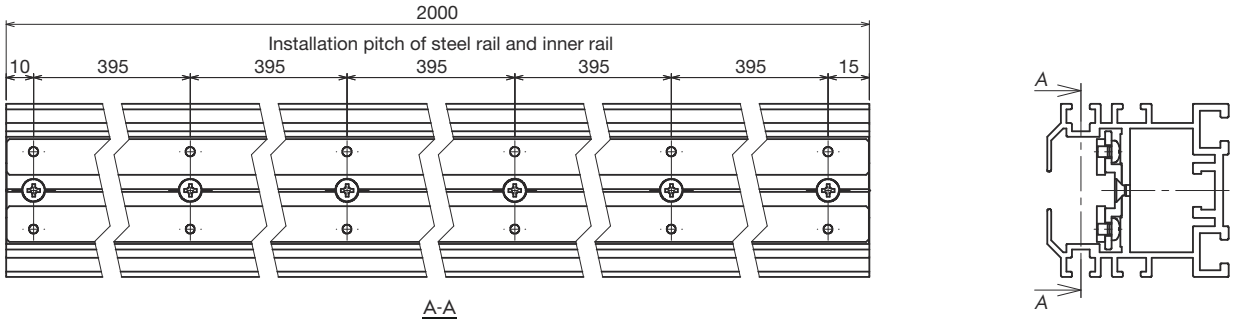

3) Construction Diagram of Frame for the Drive and Driven Sections

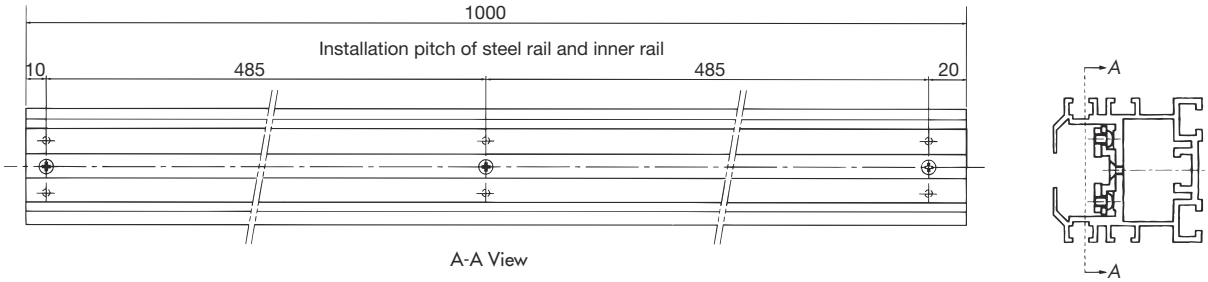

◆ RF2050VRP-R2HS has no frame for the drive and driven sections.

◆ A notch is provided on the right-end bottom in the diagram above (See page 98).

4) Notes on Handling Aluminum Frame with Steel Rail

(1) When cutting the aluminum frame with steel rail for use

① Do not cut the screw section on the frame.

② Remove burrs and chips from the cut surface.

③ Connect and secure the steel rail with the inner rail, and the inner rail with the frame of the base chain by screws 15 to 30 mm away from the cut area.

④ Machine all parts individually. Completely remove burrs and chips produced by machining before starting reassembly.

(2) Connecting the Frame

If there is a difference in level on the abutting surface of the steel rail after connecting the frame (in vertical and horizontal directions), chamfer the corners slightly to avoid chain rollers getting caught.

Design Information on Film Gripper Chain (KUM) Conveyors

Please use the dimensional information given below as reference when configuring and installing your conveyor.

1. Special Sprocket

The chain clamp will be in its maximum open position when it is located 180 degrees opposite the alignment pin (section A in the drawing). Drill a hole for the alignment pin on the side where the special sprocket is mounted.

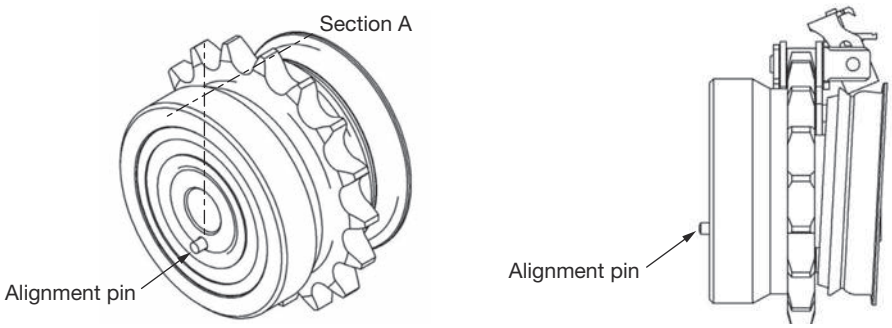

2. Special Sprocket Mounting Example

The drawing below shows the position of the alignment pin on the special sprocket. The sheet/film should be inserted from below. The chain clamp at the sheet/film entry point is at its maximum open position.
Contact a Tsubaki representative when using Film Gripper Chain.

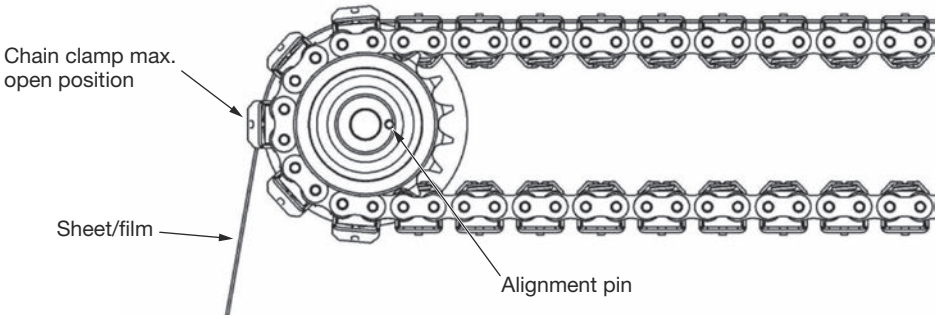

3. Points to Keep in Mind

① Operate the chain at speeds of 50 m/min or lower.

② Adjust the tension so that the chain clamp opens on the special sprocket.

③ Be sure to lubricate the sliding parts of the chain clamps (see drawing below). If the clip is opened and closed with insufficient lubrication, premature wear will be accelerated and the clamp will not open and close properly, causing problems in sheet/film transfer.

④ If the special sprocket is not used, there is a risk of damage occurring to the clamp or the spring. Be sure to use the special sprocket.

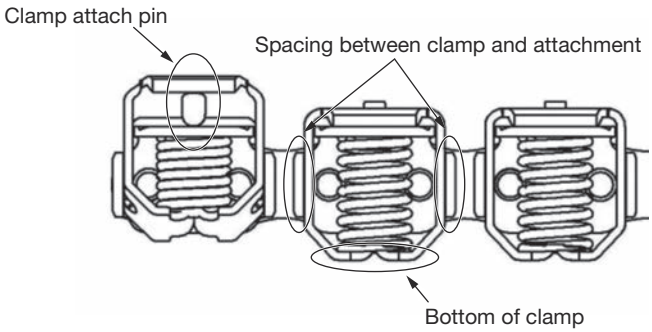

Chain Clamp Sliding Parts

Selection

Conveyor Design Guidelines

1. Conveyor System and Roller Type

■ Table 20

Conveyor System	Roller Type	Description
Chain Rolling (horizontal, inclined) 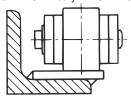 Double Pitch Chain	R Roller Heavy in chain weight Greater allowable roller load Less roller wear	• Smooth operation and vibrations are small. • Power required is low since frictional resistance is small. • Center distance between sprockets should be generally over 10 m. • Applicable for speeds over 20 m/min.
Chain Rolling 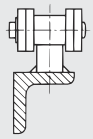	S Roller Lightweight Lower allowable roller load	• Center distance between sprockets should be generally 10 m or less. • Applicable for speeds 20 m/min or less.
Chain Sliding 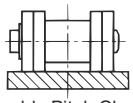 Double Pitch Chain		• Resistant to loading shocks and bad environments; however, the rail is damaged quickly. • Construction is simple. • Power required is large.

2. Conveyor Arrangement

■ Table 21

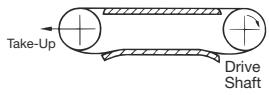	Both the conveying and return sides are supported by rails. The most recommended and streamlined layout. A sag is produced on the take-off side of the sprocket.
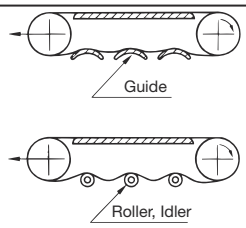	The return side is supported by guides, rollers, or idlers. Since the chain bends when it comes into contact with the rollers or guides, friction increases, allowing for easy wear. Also, chain vibration exerts a negative effect on overall running. Consequently, it is not desirable to have a long center distance between sprockets.
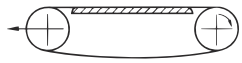	The return side is not supported. The tension due to the mass of the chain on the return side produces vibrations causing rough conveyance.

Examples showing slat conveyors and a cross rod conveyor that are most commonly used:

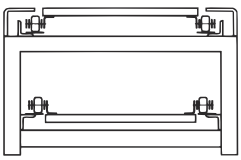	Slats are installed using A attachments, and the rollers roll over the rails on both the conveying and return sides.
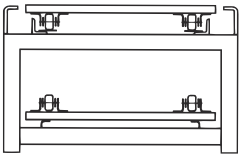	Slats are installed using K attachments. Compared to the above example, this type of arrangement is suitable for wide slat conveyors where the mass of the conveyed goods is heavy. However, on the return side the slats slide on the rail.
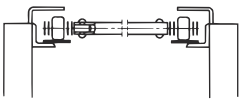	This is a cross rod conveyor where a pipe is installed by means of an EP attachment, GNK attachment, or Hollow Pin Chain. The rollers roll on the rails on both the conveying and return sides.

3. Use of Standard Small Size Conveyor Chain at High/Low Temperatures

As a general rule, standard small size conveyor chain can be operated in clean air environments and in ambient temperatures between –10°C and 60°C. When the chain is operated in environments outside this range, the following points should be taken into consideration.

Operation at very low or high temperatures:

Chain must be selected or used in a different manner when it is operated in freezing chambers, cold areas, when it passes through dryers or heat-treatment furnaces, or when it is affected by heat from the material being conveyed. Table 22 below provides guidelines for the relationship between allowable load and temperature for standard chains.

■ Table 22: Temperature Corrected Working Load

Temperature Range °C	Allowable Load
Down to −30	Max. allowable load in catalog × 0.25
Down to −20	Max. allowable load in catalog × 0.33
−10 to 150	Max. allowable load in catalog × 1.0
Up to 200	Max. allowable load in catalog × 0.75
Up to 250	Max. allowable load in catalog × 0.5

■ Table 23: Temperature Environment and Points of Concern

Temperature Range °C	Usage Conditions	Potential Problems
−50 to −30	Under –30°C or lower conditions, consider corrosion-resistant SS or AS chain. Standard chains cannot be used.	(1) Low-temperature embrittlement may occur with standard chain, reducing impact resistance. (2) Congealing of lubricant. (3) Rust due to condensation. (4) Seizure due to frost formation.
−30 to −10	Standard chain should be selected on the basis of the corrected working load above (Table 22).	
60 to 150	Different lubricant is required.	
150 to 250	Because wear resistance is reduced in this temperature range, consider selecting the next larger pitch chain size over the one originally selected to reduce bearing pressures. When standard chain is to be used, evaluate whether or not the chain can be used at a reduced allowable load (see Table 22 above).	(1) Excessive wear due to decreased pin and bush hardness. (2) Excessive elongation due to softening. (3) Insufficient lubrication and chain seizure due to deterioration of lubricant. (4) Excessive wear and chain seizure due to formation of scale.
250 to 400	Consider corrosion-resistant SS or AS chain.	

4. Lubricants and High/Low Temperatures

Special low-temperature or high-temperature lubricants are required if a chain will be exposed to temperatures outside the range of –10°C to 60°C. See page 170 for details on recommended lubricants.

5. Cautions on Use in Special Environments

As a general rule, conveyor chain should be used in clean air environments. When used in a special environment, reference should be made to the following items.

1) Use in Wet Conditions

If the chain is splashed with water or goes through heated vapor, the following problems may occur.

(1) Increase in wear elongation due to improper or insufficient lubrication.
(2) Decrease in fatigue strength from rust and corrosion (pitting) of the chain.

Countermeasures

- Reduce bearing pressure using a larger sized chain to improve wear resistance.
- Use corrosion-resistant small size conveyor chain for rust prevention.

2) Use in Acidic or Alkaline Conditions

If the chain is exposed to acids or alkaline conditions, such as battery acid and liquid used in plating processes, the following problems may occur.

(1) Embrittlement fracture of link plates and pins.
(2) Fatigue breakage of link plates and pins due to rust and pitting corrosion.
(3) Wear from usual mechanical wear and corrosion.
(4) Reduction in volume of the whole chain from corrosion.
(5) In special cases where the chain is underwater (immersed in liquid), electrochemical corrosion may occur.
(6) There are also circumstances where even stainless steel chain will corrode. The photograph below shows an example of chain that was used in a plating apparatus. The chain fell to pieces within one month due to the effects of acid.

Corrosion of stainless steel drive chain

Countermeasures for Embrittlement Fractures (stress corrosion cracking)

- Adopt a brittleness countermeasure that lowers crack susceptibility.
- Install a cover or casing to prevent acids or alkalis from contacting the chain.
- Adopt a high-grade material with anti-corrosive properties.

Countermeasures for Corrosion

- Use surface-treated attachment chain.
- Install a cover or casing to prevent acids or alkalis from contacting the chain.
- Adopt a high-grade material with anti-corrosive properties.

In general, embrittlement fractures (stress corrosion cracking) occur around the link plate holes. This is the area where the pin and bush are press-fitted to the link plate having the highest concentration of stress. Cracks occur even when there is no tension on the chain. Conveyor chain in general is more susceptible to acids than alkalis, and in special cases, embrittlement fractures (stress corrosion cracking) are generated by seawater or pit water.

Hydrogen embrittlement cracking

3) Use Under Conditions Where Wear Is a Problem

If the chain is exposed to strong abrasive materials that promote wear such as sand, coke, and metal particles, the following problems may occur.

(1) When abrasive materials penetrate between the pins and bushes, chain wear is promoted and poor articulation occurs.
(2) When abrasive materials penetrate between the bushes and rollers, chain wear is promoted and poor roller rotation occurs.
(3) When abrasive materials penetrate between the link plates, poor articulation occurs.

Countermeasures

- Apply a dust-proof casing.
- Remove foreign particles by regularly washing the chain.
- Reduce bearing pressure using a larger sized chain to improve wear resistance.
- Adopt a chain that has specially processed parts where wear is a problem.

⚠ Caution

Contact a Tsubaki representative regarding whether a product contains substances restricted for use in specific industries and applications.

Selection

6. Other Precautions

1) To keep long conveyors consistently operating in top condition, use take-up devices to eliminate chain slack. Take-up stroke = (center distance between sprockets X 0.02) + catenary sag allowance
The "0.02" factor represents a 2% allowable wear elongation of chain.
2) Chain must always be engaged with at least three sprocket teeth.
3) When operating with multiple strands of conveyor chain, sprockets should be mounted on the same shaft and all sprocket teeth should be properly aligned.
4) When operating a long conveyor with two or more strands of chain, and when especially high pitch accuracy is required, Tsubaki can provide specially configured chain to minimize the relative difference in length. Also, special sprockets can be manufactured to ensure that sprocket teeth are properly aligned.

7. Corrosion Resistance Guide for Corrosion Resistant Chains and Sprockets (Table 24)

Corrosion resistance varies accordingly depending on application conditions. This table should not be considered a guarantee. Using this table as a reference, be sure to check the corrosion resistance of the chain in advance according to actual operating conditions in determining chain type.

■ Table 24

Chemical, Food Product	Corrosion Resistant Roller Chain						Sprocket	
	SS	AS	NS	TI	PC	PCSY	Engineering Plastic	SS
Acetic acid 10% 20°C	A	A	A	A	A	A	B	A
Acetone 20°C	A	A	A	A	A	×	A	A
Alcohol (methyl, ethyl, propyl, butyl)	A	A	A	A	A	A	A	A
Aluminum sulfate Saturated 20°C	A	×	A	A	–	–	–	A
Ammonium chloride 50% Boiling point	B	×	A	A	–	–	–	B
Ammonium nitrate Saturated boiling	A	A	A	A	B	A	A	A
Ammonium sulfate Saturated 20°C	A	B	A	A	–	–	–	A
Aqueous ammonia 20°C	A	A	A	A	A	A	A	A
Beer 20°C	A	A	A	A	A	A	A	A
Benzene 20°C	A	A	A	A	A	A	A	A
Boric acid 50% 100°C	A	A	A	A	–	–	–	A
Butyric acid 20°C	A	A	A	A	A	–	A	A
Calcium chloride Saturated 20°C	B	×	A	A	B	A	A	B
Calcium hydroxide (hydrated lime) 20% Boiling	A	A	A	A	A	A	–	A
Calcium hypochlorite (bleaching powder) Available chlorine 11–14% 20°C	A	×	A	A	×	A	B	A
Carbolic acid 20°C	A	A	A	A	×	A	×	A
Carbonated water	A	A	A	A	–	–	–	A
Carbon tetrachloride (dry) 20°C	A	A	A	A	A	A	A	A
Chlorine gas (dry) 20°C	B	×	B	A	–	A	×	B
Chlorine gas (wet) 20°C	×	×	B	A	–	A	×	×
Chlorine water	×	×	A	A	×	–	×	×
Chromic acid 5% 20°C	A	B	A	A	×	A	×	A
Citric acid 50% 20°C	A	A	A	A	–	A	A	A
Coffee Boiling	A	A	A	A	A	A	A	A
Cola syrup	A	A	A	A	A	A	A	A
Concentrated nitric acid 65% 20°C	A	×	A	A	×	A	×	A
Concentrated nitric acid Boiling	B	×	B	A	×	×	×	B
Creosote 20°C	A	A	A	A	–	–	–	A
Developer (photo) 20°C	A	B	A	A	A	A	A	A
Ether (ethyl ether) 20°C	A	A	A	A	A	A	A	A
Ferric chloride 5% 20°C	B	×	B	A	–	–	×	B
Formalin (formaldehyde) 40% 20°C	A	A	A	A	–	–	B	A
Formic acid 50% 20°C	A	A	A	A	×	A	×	A
Fruit juice 20°C	A	B	A	A	A	A	A	A
Gasoline 20°C	A	A	A	A	A	A	A	A
Glycerin 20°C	A	A	A	A	A	A	A	A
Honey, syrup	A	A	A	A	A	A	A	A
Hydrochloric acid 2% 20°C	×	×	×	A	×	A	×	×
Hydrogen peroxide 30% 20°C	A	B	A	A	×	A	×	A
Hydrogen sulfide (dry)	A	A	A	A	A	A	A	A
Hydrogen sulfide (wet)	×	×	×	A	×	–	–	×
Ketchup 20°C	A	A	A	A	A	A	A	A
Kerosene 20°C	A	A	A	A	–	A	–	A
Lactic acid 10% 20°C	A	B	A	A	A	–	A	A
Lard	A	A	A	A	–	–	–	A
Linseed oil 100% 20°C	A	B	A	A	A	–	A	A

Chemical, Food Product	Corrosion Resistant Roller Chain						Sprocket	
	SS	AS	NS	TI	PC	PCSY	Engineering Plastic	SS
Malic acid 50% 50°C	A	A	A	A	A	A	A	A
Mayonnaise 20°C	A	B	A	A	A	A	A	A
Milk 20°C	A	A	A	A	A	A	A	A
Nitric acid 5% 20°C	A	B	A	A	×	A	×	A
Oleic acid 20%	A	A	A	A	A	–	A	A
Oils (vegetable, mineral) 20°C	A	A	A	A	A	A	A	A
Oxalic acid 10% 20°C	A	B	A	A	–	A	A	A
Paraffin 20°C	A	A	A	A	A	A	A	A
Petroleum 20°C	A	A	A	A	A	–	A	A
Phosphoric acid 5% 20°C	A	B	A	A	×	A	×	A
Phosphoric acid 10% 20°C	B	B	B	A	×	A	×	B
Picric acid Saturated 20°C	A	A	A	A	–	–	–	A
Potassium chloride Saturated 20°C	A	B	A	A	–	–	A	A
Potassium dichromate 10% 20°C	A	A	A	A	A	–	A	A
Potassium hydroxide (caustic potash) 20% 20°C	A	A	A	A	A	A	A	A
Potassium nitrate 25% 20°C	A	A	A	A	A	–	A	A
Potassium nitrate 25% Boiling point	A	×	A	A	–	–	–	A
Potassium permanganate Saturated 20°C	A	A	A	A	–	A	×	A
Seawater 20°C	B	×	A	A	B	A	A	B
Soapy water 20°C	A	A	A	A	A	A	A	A
Sodium carbonate Saturated boiling point	A	A	A	A	–	A	B	A
Sodium chloride 5% 20°C	A	B	A	A	A	A	A	A
Sodium cyanide 20°C	A	–	A	A	–	–	–	A
Sodium hydrogen carbonate 20°C	A	A	A	A	A	–	A	A
Sodium hydroxide (caustic soda) 25% 20°C	A	A	A	A	A	A	A	A
Sodium hypochlorite 10% 20°C	×	×	A	A	×	A	B	×
Sodium perchlorate 10% Boiling point	A	×	A	A	–	–	–	A
Sodium sulfate Saturated 20°C	A	A	A	A	–	–	–	A
Sodium thiosulfate 25% Boiling point	A	A	A	A	–	–	–	A
Soft drinks 20°C	A	A	A	A	A	A	A	A
Stearic acid 100% Boiling point	×	×	A	A	×	–	A	×
Sugar solution 20°C	A	A	A	A	A	A	A	A
Sulfur dioxide (wet) 20°C	A	×	A	A	–	–	–	A
Sulfuric acid 5% 20°C	×	×	A	A	×	A	×	×
Synthetic detergent	A	A	A	A	A	A	A	A
Tartaric acid 10% 20°C	A	A	A	A	A	A	A	A
Turpentine oil 35°C	A	A	A	A	–	–	–	A
Varnish	A	A	A	A	–	–	–	A
Vegetable juice 20°C	A	A	A	A	A	A	A	A
Vinegar 20°C	B	×	A	A	B	A	B	B
Water	A	A	A	A	A	A	A	A
Wine 20°C	A	A	A	A	A	A	A	A
Whiskey 20°C	A	A	A	A	A	A	A	A
Zinc chloride 5% 20°C	B	×	B	A	B	A	×	B
Zinc sulfate 25% Saturated 20°C	A	A	A	A	–	A	–	A

Chemical, Food Product	Standard (Steel Chain)
Acetic acid (5%)	×
Acetone	×
Alcohol	A
Aqueous ammonia	B
Beer	A
Benzene	A
Carbon tetrachloride	B
Caustic soda (25%)	×
Chromic acid (10%)	×
Citric acid	×
Formic acid	×
Formic acid aldehyde	A
Fruit juice	×
Gasoline	A
Hydrochloric acid (2%)	×
Hydrogen peroxide	×
Hypochlorite soda	×
Iodine	×
Lactic acid	×
Milk	A
Nitric acid (5%)	×
Oils (vegetable, mineral)	A
Paraffin	A
Phosphoric acid (10%)	×
Potassium hydroxide	B
Seawater	×
Soapy water	B
Sodium chloride	×
Sodium hydroxide (20%)	×
Soft drinks	A
Sulfuric acid	×
Vegetable juice	B
Vinegar	×
Water	×
Whiskey	A
Wine	A

A: Totally resistant
B: Partially resistant (depending on operating conditions)
×: Not resistant
–: Unknown

For information on the chemical resistance of LSK chain and KV rollers, contact a Tsubaki representative.

Free Flow Chain Guidelines for Use

1. Double Plus Chain (Common with Double Plus Chain with Snap Cover)

① Recommended conveyor length is 15 m or less.

② Avoid using a chain with engineering plastic rollers in an environment where it will be exposed to oil or water. (Use in such an environment may cause the double-speed capability to deteriorate.)

③ Use caution not to drop pallets or conveyed objects on the chain and avoid any operation that may expose the chain to impact and pressure by pressing it down.

④ Double Plus chain with plastic rollers should be used without lubrication. If the expected life is not achieved, please consider using a Lambda chain.

⑤ Steel rollers must be lubricated to prevent an abnormal increase in the coefficient of friction. If abnormal noise occurs at a curved section around a sprocket or between the large and small rollers on the conveying section due to aging, apply SAE10 to 20 oil between the pins and bushes and between the large and small rollers. Use a spray-type lubricator or brush to ensure the oil reaches the point where lubrication is necessary. If the transfer of oil to conveyed objects causes a problem, wipe off the oil adhering to the outer surface of the rollers.

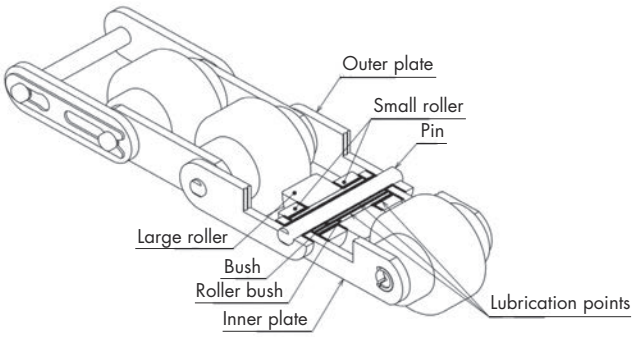

Note: Since Lambda chain can suppress noise between pins and bushes, it is suitable for use where lubrication is not possible or should be avoided.

⑥ **Finishing the Ends on the Conveying Side**
Put a chamfer on the ends of the upper rail that the chain's small rollers travel on.

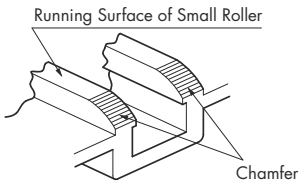

⑦ **Large Roller Support**
It is possible to prevent the chain's large roller from dipping at the chamfered section by installing a support for the large roller on the ends of the rail on the driven side.

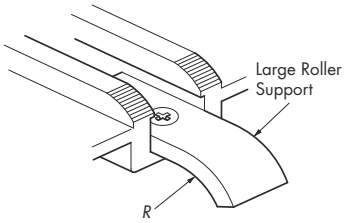

⑧ **Transfering Objects Between Conveyors (straight line transfer)**
To convey pallets in a stable condition at the transfer section of the conveyor, install a roller between the two conveyors or the shafts of sprockets. Be sure that the distance (ℓ) from the ends of the rail to the roller that supports the pallets is less than 1/2.5 times the pallet's length in the conveying direction.

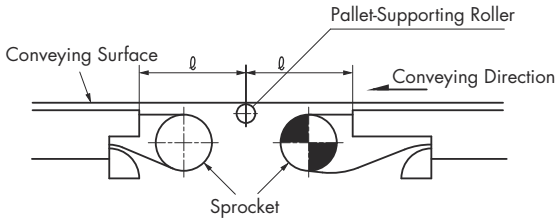

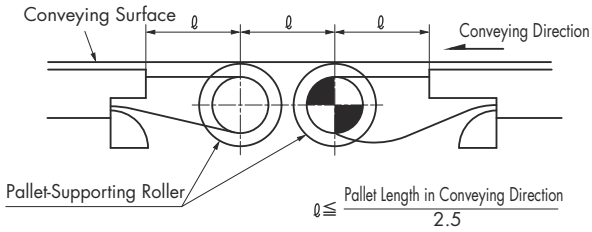

⑨ **Take-Up (1)**

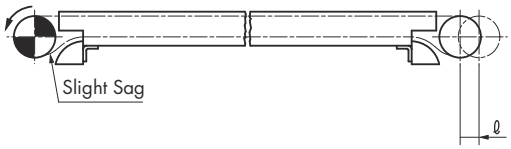

Take-up amount ℓ = Chain pitch × 2 + Allowance length
Allow for a little sag up to 10% of span on the chain under the drive-side sprocket during operation. When the amount of sagging increases, adjust the take-up or cut the chain.

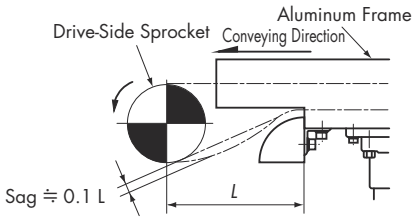

Chain Sag

Unit: mm

Chain Size	Normal Sag	Max. Sag
RF2030	25	75
RF2040	35	105
RF2050	40	120
RF2060	50	150
RF2080	65	190

The sag in the table above is given on the basis of the conveyor design information on page 153.

Selection

⑩ Take-Up (2)

Where take-up configuration shown above is not allowed because of the presence of conveyors, design the take-up configuration referring to the diagram below. With Double Plus Chain with snap cover, make the dimension **R* larger than the dimension *R* of the return guide (see the dimensional diagram).

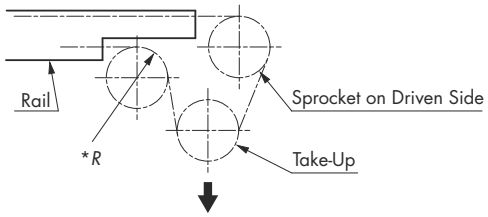

⑪ Sprocket and Shaft

Drive sprocket ··· Should be keyed, with both left and right sprockets aligned.

Take-up sprocket ··· Should be keyless (free), with separate shafts on the left and right sprockets.

Other sprockets ··· Keyless (free)

⚠ If a conveyed object is placed directly on the chain, the large roller may leave a mark on the conveyed object.

Note: RF2030VRPUA and RF2030VRPUB (urethane-lined rollers) are designed so that the large roller is less likely to leave a mark on conveyed objects.

2. Double Plus Chain with Snap Cover

① Handle the chain with care, as the snap cover is made of engineering plastic.

② There are two types of snap covers; one for the outer link and another for the inner link. Use caution to avoid installing the wrong type of snap cover. (See the diagram below.) (The snap cover is fitted on the chain at time of shipment.)

③ When connecting chains, connect them via special connecting link and then fit the snap cover for the outer link correctly at the notch of the plate. (See the diagram below.)

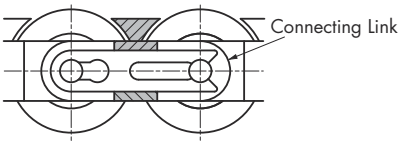

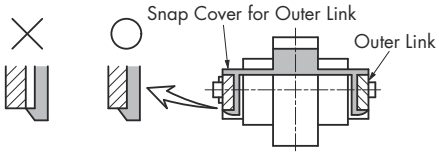

④ If a snap cover is damaged in handling, replace it with a new snap cover.

Handling

Installation

1. Sprocket Installation

Proper installation of the sprockets is critical to smooth operation of a conveyor, and it also affects chain life. The installation should be properly carried out in accordance with the procedures described below.

① Check the levelness of the shafts with a level. Adjust to within a tolerance of $\pm \frac{1}{300}$.

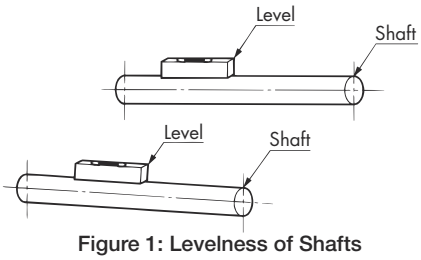

Figure 1: Levelness of Shafts

② Check the parallelism of the shafts with a scale. Adjust the shafts so that the parallelism as calculated with formula $\frac{A - B}{L}$ is to within $\frac{1}{100}$.

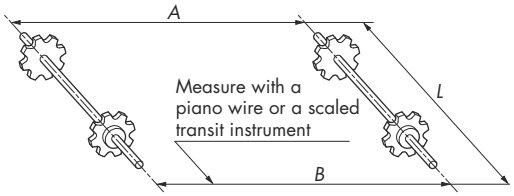

Figure 2: Parallelism of Shafts

③ Align the sprocket axis to match.
Tolerance relative to center distance:
Up to 1 m : within 1 mm
1 to 10 m : within $\frac{\text{Distance between shafts (mm)}}{1000}$
10 m or longer : within 10 mm

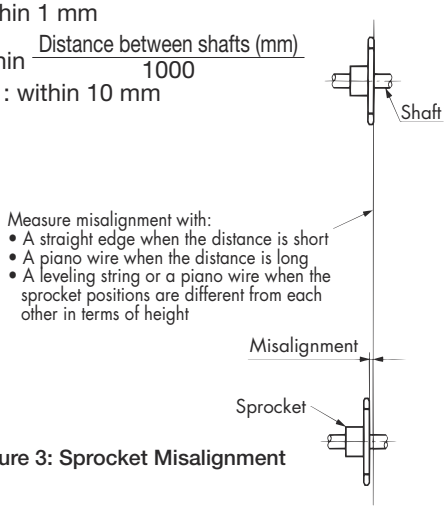

Figure 3: Sprocket Misalignment

④ After processes ① to ③ have been completed, lock each of the sprockets to the shaft(s) by means of keys or Tsubaki POWER-LOCKS. Lock the sprockets that are installed and used on the same shaft so that the teeth of both sprockets align in terms of phase.

2. Centering

Because the conveyor chain runs on a guide rail, the precision of the guide rail must be especially high and the conveyor properly centered. In cases like vertical bucket elevators where there are no guide rails, if the conveyor is not precisely centered, the chain will wobble and weave. This will have a significant impact on the life of the conveyor chain.

3. Rails

In general, rails wear faster than chain. While it is important that the rail material be matched to the chain material, in general, rolled steel for general structures (SS400) or plastic material (ultra-high molecular weight polyethylene) is recommended. The material used for steel R roller guide rail should be a high tensile strength material at least S45C (JIS), 1045 (AISI) or better.

1) Wear is a complex phenomenon and is influenced by a variety of factors, including corrosion, lubrication, load speed, and operating time. Deducing the precise relationship between chain life and rail material is difficult.
2) Chain life is influenced by the rail. For new installations, verify the wear state by selecting rail material that is slightly softer than the chain. The smoother the finish on the rail surface, the better.
3) Operating conditions must be taken into consideration when selecting materials. In environments involving mechanical impact and other special conditions, there may be cases when plastic should not be used.
4) Precautions before putting rails into operation
   1. Lubricate all rail connecting parts, chamfer edges, and eliminate uneven levels and gaps. (See Figure 4.)
   2. After welding rail, remove spatter or scale.
   3. During the trial run, run the conveyor unloaded. Lubricate the chain and check the condition of chain and rails.

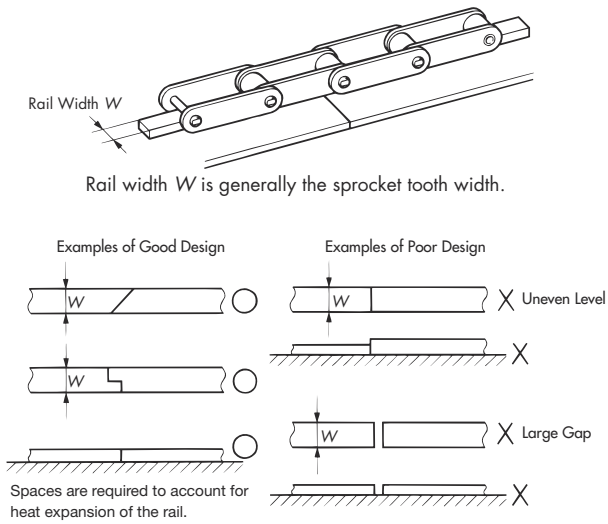

Figure 4: Rail Joints

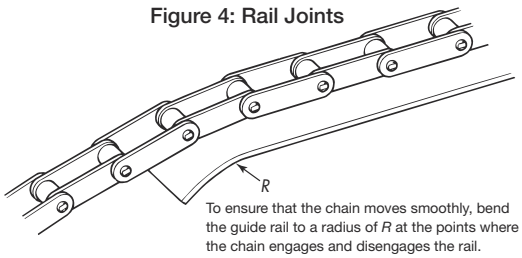

Figure 5: Chain Entrance/Exit from Guide Rail

Handling

How to Cut Chain

Attachment chains are generally sold in unit sections (1 unit = 10 ft/3,048 mm). Configuring chain to a specific length will require cutting units.

1. Grind Pin Rivets

Using a grinder, grind down the ends of the two pins on the outer link (on the attachment side) until they are level with the outer plate. Take care that the chain does not overheat (see Figures 6 and 7). Particularly with Lambda Chain, work on the chain slowly so that the oil-impregnated bushes do not become too hot.

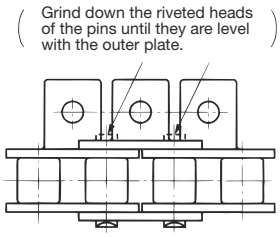

Figure 6: Attachment Chain

Figure 7: Grinding Down Pin Ends

2. Set Chain in a Vise or Cradle

1) S Roller (A, SA, EP, GNK1 attachments)

Place the chain in the jaws of a vise with the attachment side facing up and gently tighten the vise to secure the chain (Figures 8 and 9).

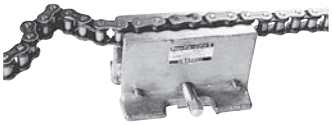

Figure 8: Setting Chain in Chain Vise

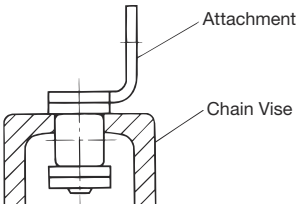

Figure 9: Cross Section of Chain Set in Chain Vise

2) S Roller (K, SK attachments), R Roller (K, SK attachments), Plastic R Roller, Poly Steel Chain (with attachments)

For these types, set the chain in a cradle (Figure 11-1). Another method, used only with steel S rollers (Figure 11-2), is to set the pin to be removed on the edge of the chain vise.

Whichever method is used, support blocks should be placed under the chain on either side of the vise to ensure that the chain remains stable (Figure 10). Any attachment can be cut using this method. However more force will be required to remove the pin as mentioned in “3. Pin Removal” on the next page.

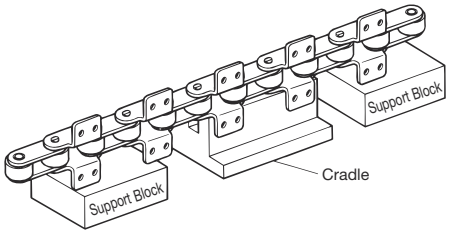

Figure 10: Cradle and Support Blocks

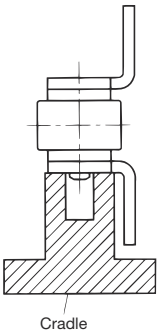

Figure 11-1: Cradle Cross Section

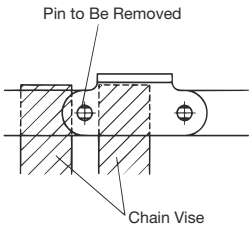

Figure 11-2: Chain Vise Usage

3) R Roller (A, SA, EP attachments)

This method cannot be used with plastic rollers.

Secure the non-attachment side plate of the chain in the vise and support the R rollers on the vise (Figure 13). Ensure that the chain is supported on both sides of the vise (Figure 12).

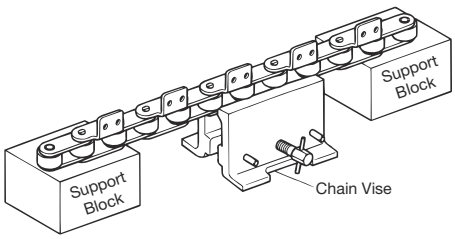

Figure 12: Chain Vise and Support Blocks

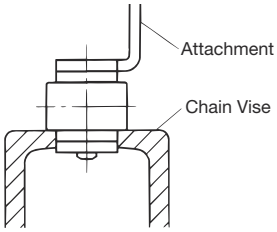

Figure 13: Cross Section of Chain Set in Chain Vise

3. Pin Removal

1) Using a primary punch suitable for the chain size (refer to the Accessories section of the Tsubaki Drive Chain and Sprockets catalog), place the punch on the head of the pin that was ground down and strike with a hammer. Be sure to strike the pins on the outer link alternately to remove them evenly and at the same time. Strike the pins until they are just about to release from the outer plate (Figure 14).

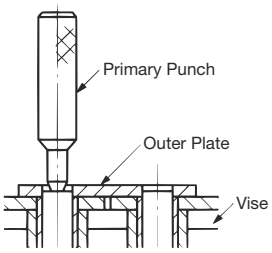

Figure 14: Tapping Pin with Primary Punch

2) Using a secondary punch (refer to the Accessories section of the Tsubaki Drive Chain and Sprockets catalog) and a hammer, completely remove the pair of pins from the outer link. Check that the bush of the removed pins has not come loose from the inner plate, and that the bush has not become deformed in the process. If the bush has come loose or is deformed, do not continue to use it.

4. Cutting Poly Steel Chain (Without Attachments)

1) Place the outer plate of the chain in a cradle, position a special punch on the head of the pin (see photo in Figure 16 below), and lightly strike with a hammer (Figure 15).

2) Work carefully, as there is a risk of damage if excessive force is applied to engineering plastic components in this process.

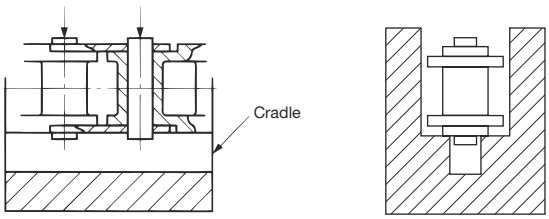

Figure 15: Cross Section Showing Poly Steel Chain Set in Cradle

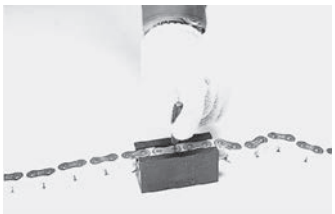

Figure 16: Disconnecting Poly Steel Chain

⚠ Safety Points

1. Use a grinder to grind down only the riveted section of the pin head. Removing the pin without grinding the riveted head off will require additional time and effort, and may damage the chain.
2. Do not re-use parts removed from the chain.

5. Cutting Double Plus Chain

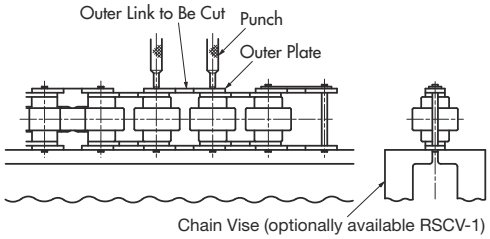

① Shear off the rivet on the pin end of the outer link to be cut using a hand grinder.

② Set the Double Plus Chain (for chain with snap cover, remove the snap covers from about three links of the area to be cut) on a chain vise (or its equivalent) and drive in the pin using a punch or other means until the outer plate on the upper side is removed.

③ The chain can be cut by using a chain vise and a fork-shaped tool.

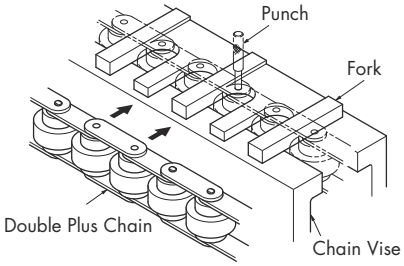

6. Cutting Outboard Roller Chain

◆ Cutting Chain When the Base Chain Roller Is an S Roller

For cutting Poly Steel chain with outboard rollers, refer to page 165.

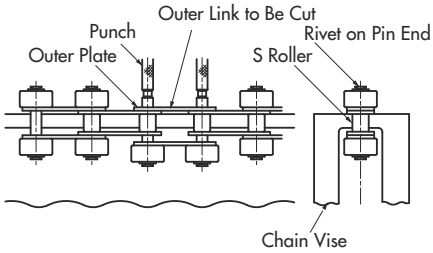

① Determine the outer link to be cut and mark the link for identification.

② Set the chain on a chain vise (sold separately) as shown above and shear off the rivets on the pin ends (two rivets on one side) using a hand grinder.

③ Remove the two pins using a pin with a diameter slightly smaller than the pin diameter of the chain (using a Tsubaki Punch or its equivalent). When the pins are pulled out a little, the two outboard rollers on the upper side can be removed. (The diagram above shows the outboard rollers being removed.)

④ Directly tap the pin with a small hammer until the end of the pin reaches the upper face of the outer plate to remove. Tap the two pins alternately to ensure they come off evenly. Use caution not to damage the outboard rollers on the right and left.

⑤ Tap and pull out the two pins using a punch until the outer plate on the upper side can be removed.

Handling

◆ Cutting Chain When the Base Chain Roller Is an R Roller

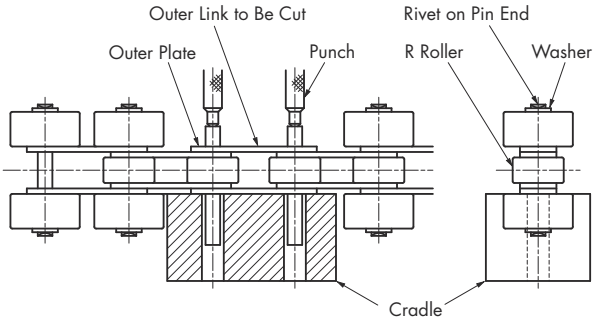

① Determine the outer link to be cut and mark the link for identification.

② Shear off the rivets on the pin ends (four rivets) using a hand grinder so as to remove the four outboard rollers. In doing so, shear down to the washers with the grinder to remove the washers.

③ Remove the four outboard rollers. (Receive the outboard roller on the cradle, apply the punch on the pin end face, and tap the pin out until the washer is removed. Follow the same procedure to remove the washers on the other side.)

④ Set the chain on the cradle as shown above and remove the two pins by tapping the punch with a hammer. Prepare a cradle yourself as appropriate.

⑤ Follow steps ④ and ⑤ of "Cutting Chain When the Base Chain Roller Is an S Roller" on page 156.

⑥ If outboard rollers are spaced every two or more links, the rivet parts to be sheared off will differ from those shown in the above diagram. (See the diagram below.)

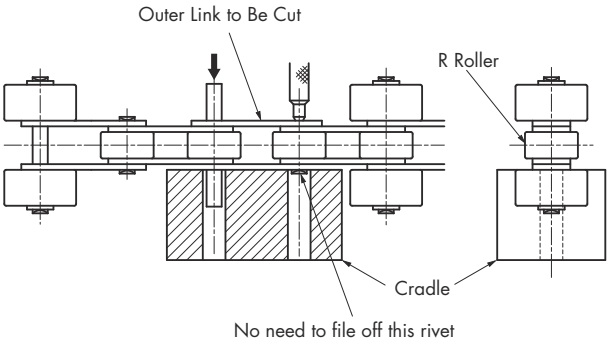

◆ Cutting Poly Steel Chain with Outboard Rollers

• When the Outboard Rollers Are Arranged in a Staggered Installation

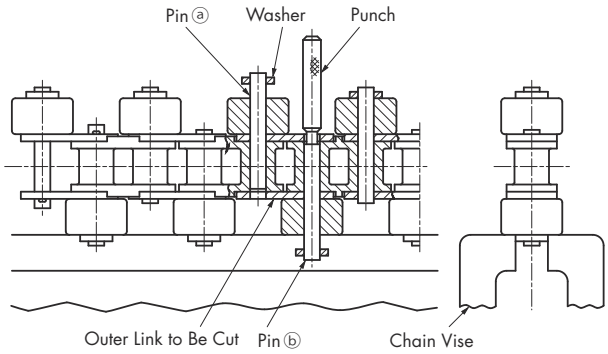

① Determine the outer link to be cut and mark the link for identification.

② Although the chain can be set in a chain vise in the same manner as shown in "Cutting Chain When the Base Chain Roller Is an S Roller" on page 156, this setting damages the chain because the inner link is made of engineering plastic. For this reason this cutting method cannot be used.

③ Lightly tighten the washer on the pin end with a chain vise, as shown above. Since no rivet is provided on the pin end on this chain, proceed to cutting the chain.

④ Use a pin with a diameter slightly smaller than the pin diameter of the chain (using a Tsubaki Punch or its equivalent), tap the punch lightly with a hammer, and pull out the pin of the chain gradually (see the above diagram). When the pin is removed from the upper outer plate as shown above, stop tapping the pin.

⑤ When pins ⓐ and ⓑ are pulled out in the same procedure, the chain can be cut. The diagram above shows the state whereby pin ⓐ has been pulled out to the specified position and pin ⓑ has already been pulled out.

⑥ Discard the cut outer links (shown below).

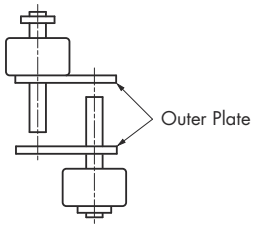

- When the Outboard Rollers Are Arranged in a Crosswise Installation

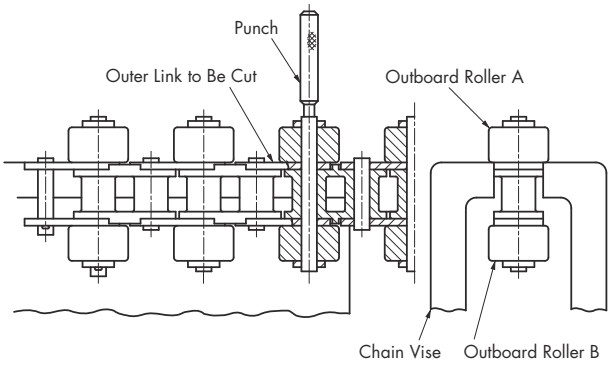

① Determine the outer link to be cut and mark the link for identification.

② Although the chain can be set in a chain vise in the same manner as shown in "Cutting Chain When the Base Chain Roller Is an S Roller" on page 156, this setting damages the chain because the inner link is made of engineering plastic. For this reason this cutting method cannot be used.

③ Support outboard roller "A" on the upper side with a chain vise as shown above and lightly tighten the chain vise. Bring the outer link to be cut to the end of the chain vise, as shown above.

④ Apply the punch to the pin end of outboard roller "A" and lightly tap the punch with a light hammer. Outboard roller "A" will be removed as shown below.

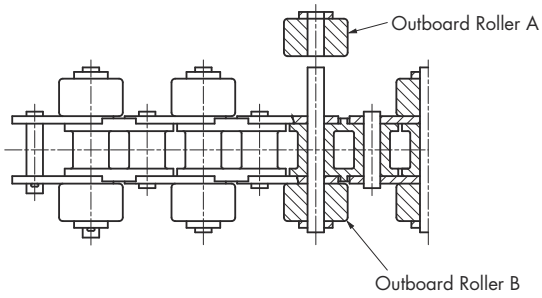

⑤ Turn the chain upside down and remove outboard roller "B" by following the same procedure for removing outboard roller "A" .

⑥ Set the chain after removing outboard rollers "A" and "B" on the cradle as shown below, tap the punch lightly with a hammer, and remove the two pins. Pull out the pins up to a position where the upper outer link is removed. (Prepare a cradle yourself as appropriate.)

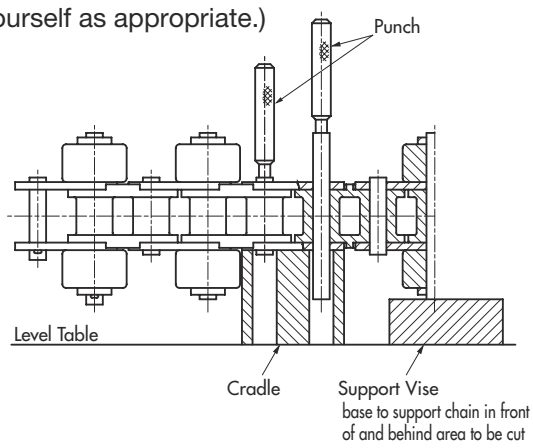

7. Cutting Top Roller Chain

① Mark the outer link to be cut for identification.

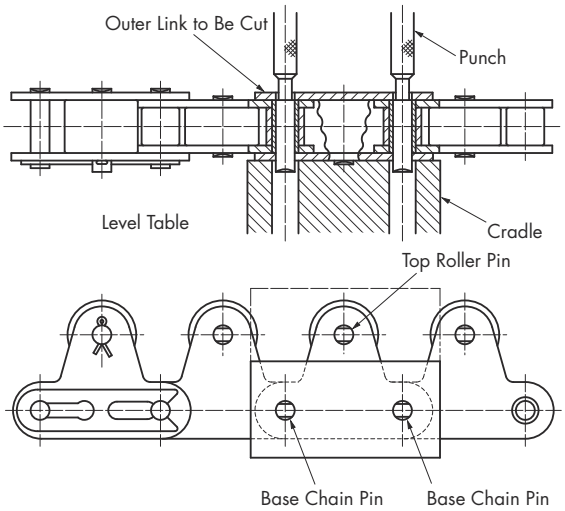

② Shear off the rivets on the base chain pin ends and top roller pin ends using a hand grinder or other means (three rivets on one side of the chain).

③ Turn the chain side ground by the grinder upward and set the chain on a cradle, as shown above. Prepare a cradle yourself as appropriate. To remove the three pins including the top roller pin at the same time, prepare a cradle integrating the part shown by the phantom line.

④ Tap the punch (or its equivalent) with a hammer until the two (three) pins are removed from the outer plate (up to the position shown in the diagram).

⑤ Change the setting of the cradle as shown below to remove the top roller pin. (When top rollers are not attached to the outer link, this procedure is not necessary.)

⑥ Remove the top roller pin by repeating Step ④.

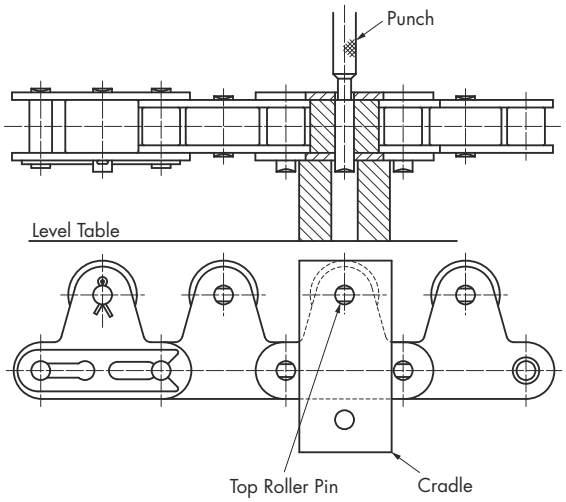

Handling

How to Connect Chain

1. Assembling with a Connecting Link

1) Insert the pins of the connecting link into the bushes of the free inner links. Place the free link plate over the pin ends and secure using a spring clip or cotter pins.
2) The pins are slip-fit into the connecting plate, meaning the pins can be inserted manually.

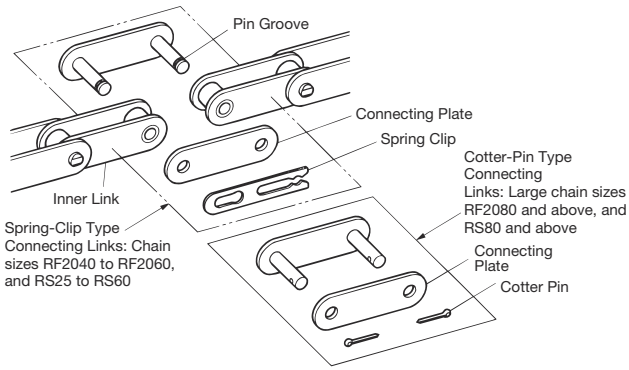

Figure 17: How to Connect Attachment Chain

2. Installing Spring Clips

Check that the spring clip is securely attached. Failure to install the spring clip or improper installation may result in an accident.

1) Spring clips are used to secure the connecting link of chain sizes smaller than RF2060 and RS60. Insert the pins of the connecting link into the bushes of the free inner links, place the link plate over the pin ends, and slide the spring clip over the ends of the pins so that the slot and the fingers of the clip engage the grooves securely (Figures 18 and 19).
2) Pay careful attention to ensure that the fingers of the spring clip are not spread too wide. If the spring clip does not fit securely, it could become detached without warning, leading to an accident (Figures 19 and 20).

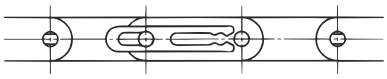

Figure 18: Slide Spring Clip Over Grooves in Pin Ends

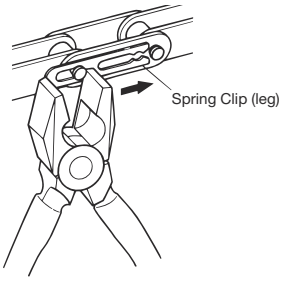

Figure 19: Use a Pair of Pliers to Secure Spring Clip

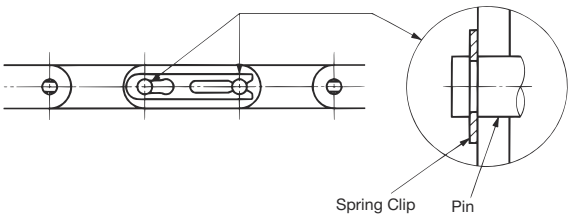

Figure 20: Spring Clip Installed Correctly

3) In general, the spring clip should be installed in the direction opposite to chain travel, as shown in the drawing below (Figure 21).

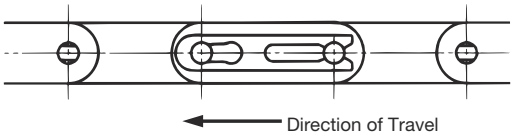

Figure 21: Spring Clip Installation

3. Installing Cotter Pins

Securely install the cotter pins in the holes provided on the ends of the pins. Failure to install the cotter pins or improper installation may result in an accident.

1) After the cotter pin has been fully inserted into the hole on the end of the pin, open the legs of the cotter pin to an angle of around 60 (Figure 22). Do not re-use cotter pins. Do not use commercially available cotter pins.

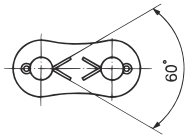

Figure 22: Open Legs of Cotter Pin

2) How to Open the Legs of the Cotter Pin

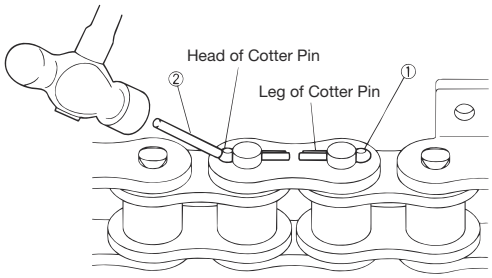

Figure 23

① Insert the cotter pin into the cotter pin hole.
② Use a pin that is somewhat larger in diameter than the cotter pin to lightly tap the head of the cotter pin. The legs of the pin will open slightly.

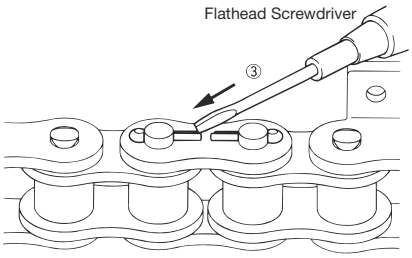

Figure 24

③ Insert the blade of a flathead screwdriver at the point where the legs of the cotter pin have opened slightly.

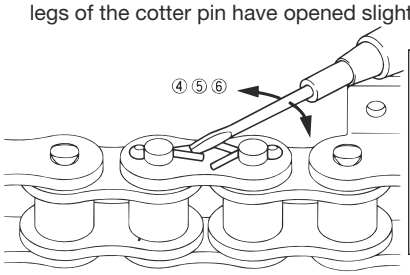

⚠ Caution

Perform this operation with extreme care! If the end of the screwdriver slips, it could puncture the hand or cause other injury.

Figure 25

④ Insert the blade of the flathead screwdriver at an angle and move the screwdriver back and forth to open the legs of the cotter pin.

⑤ Press down the head of the cotter pin tightly so that the cotter pin will not disengage from the cotter pin hole.
⑥ Bend the cotter pin legs to the 60-degree angle mentioned on the previous page.

4. Double Plus Chain

1) Connecting Using a Spring Clip (RF2060 or smaller)

① Pass the two pins of the connecting link through the bushes of the inner link and then through the holes of the connecting plate.

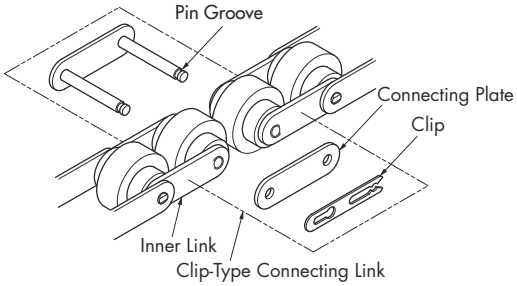

② Fit the spring clip securely into the pin groove.

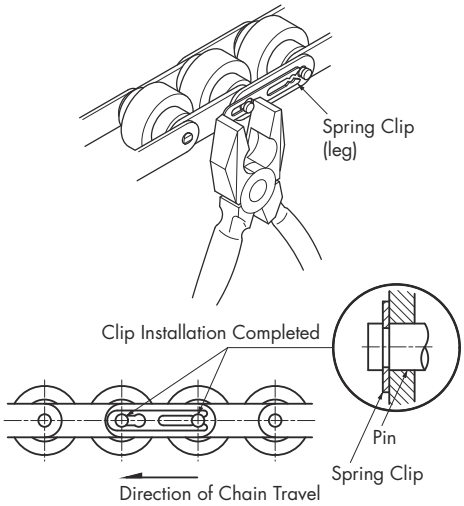

2) Connecting Using a Cotter Pin (for RF2080)

① Pass the two pins of the connecting link through the bushes of the inner link and then through the holes of the connecting plate.

② Pass the cotter pin through the hole of the pin and open the legs of the cotter pin to an angle of about 60 degrees.

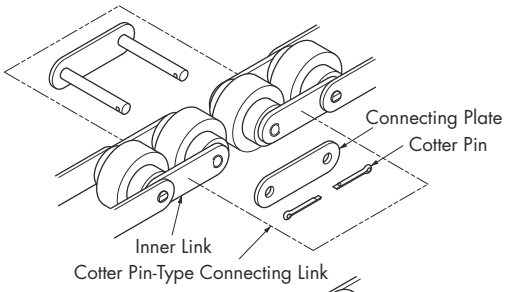

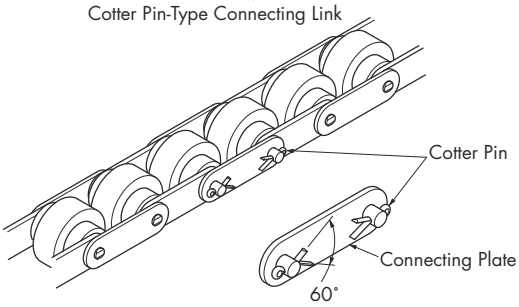

5. Chain with Outboard Rollers

Chains are connected using connecting links.

1) When the Outboard Rollers Are Arranged in a Staggered Installation

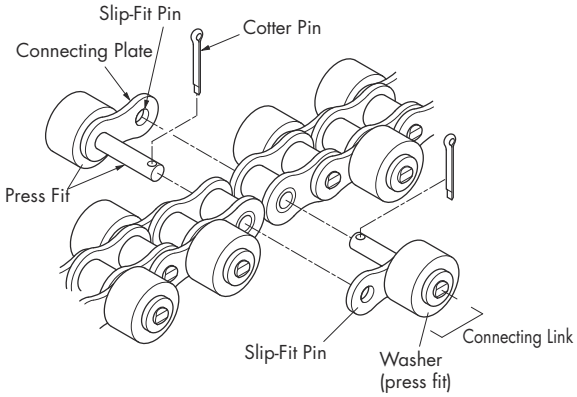

① Pass the two pins of the connecting link through the holes of the inner link and then through the slip-fit connecting plate.

② Insert a cotter pin through each pin and open the legs of the cotter pin to an angle of about 60 degrees.

2) When the Outboard Rollers Are Arranged in a Crosswise Installation

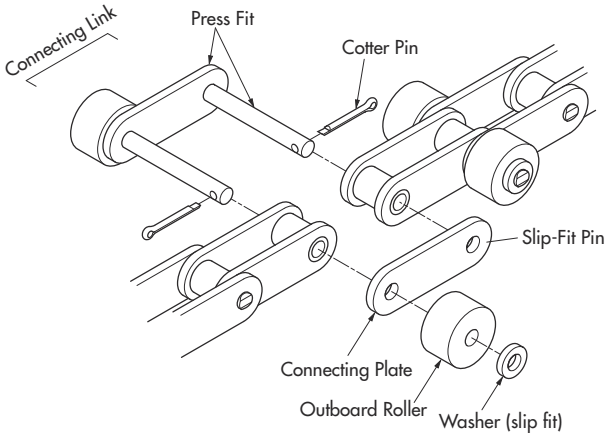

① Pass the two pins of the connecting link through the holes of the inner link and then through the slip-fit connecting plate.

② When installing outboard rollers on both sides of a pin as shown above, pass the pin through the outboard rollers and washer, and attach cotter pins in two places. Open the legs of the cotter pins to an angle of about 60 degrees.

Handling

6. Top Roller Chain

① Chains are connected using connecting links.

② Pass the two pins of the connecting link through the bushes of the inner link and then through the holes of the connecting plate (the connecting plate is slip fit).

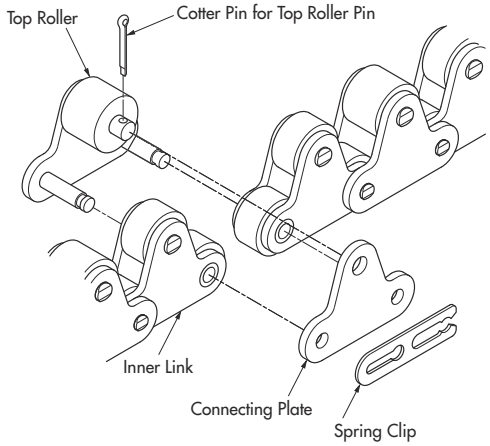

Spring Clip-Type Connecting Link

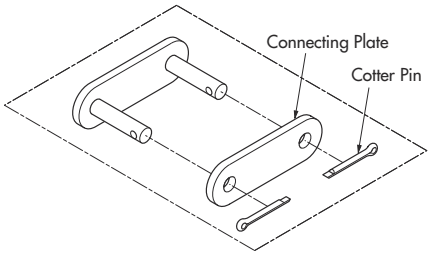

Cotter Pin-Type Connecting Link

③ Fit a cotter pin or spring clip securely on the pin. Open the legs of the cotter pin to an angle of about 60 degrees. Refer to the Double Plus Chain section (page 160) for detailed information on fitting the spring clip.

Top Roller Chain Connecting Links

1. There are two types of connecting links. Use caution when placing an order for connecting links to ensure correct order placement.
2. The outer diameter of the top roller differs in chain with top rollers installed on every link and in chain with top rollers installed on every second link. Refer to the dimensional drawing for the dimensions of these top roller chains. (The diameter of double pitch rollers is the same in both these installation types.)
3. When an attachment other than top rollers is attached to the connecting link, please diagram it. (Code for the connecting link: JL)

◆ For chain with top rollers installed on every link

Model Numbering Example

RS40-TRPS - JL

Base Chain — Connecting Link

◆ For chain with top rollers installed on every second link

Model Numbering Example

RS40-TRP - JL

Base Chain — Connecting Link

Lubrication

Proper lubrication of roller chain is essential for peak performance and full chain life. In particular, the greater the level of performance demanded of the chain, the more the need for lubrication increases.

1) The purpose of lubrication is to reduce wear on chain parts, prevent corrosion (rust), and economize on power demands.
2) Lubricate the chain periodically (about once a week) so that the chain always remains damp with oil. Drip lubricate (using lube listed below) or apply lube with a brush.
3) Lubrication locations

Since wear between pins and bushes causes chain elongation, lubrication must be maintained on all contact surfaces. Also, areas where chain parts (plates, etc.) come into contact with guide rails must be lubricated (see Figure 26).

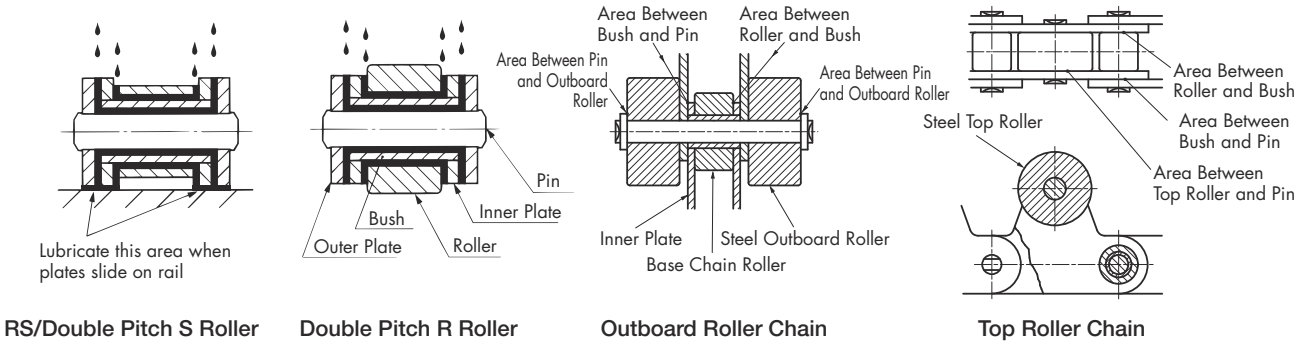

Figure 26: Lubrication Points

■ Table 25: Lubrication (SAE Numbers)

Lubrication Method	Drip or Brush			
Ambient Temperature / Tsubaki Chain No.	−10°C to 0°C	0°C to 40°C	40°C to 50°C	50°C to 60°C
RS50/RF2050 or lower small-pitch chain	SAE10W	SAE20	SAE30	SAE40
RS60 to 100、RF2060 to 2100	SAE20	SAE30	SAE40	SAE50
RS120/RF21200 or higher large-pitch chain	SAE30	SAE40	SAE50	

■ Table 26: Commercially Available Lubricants

(As of June 1, 2020)

SAE	SAE10W	SAE20	SAE30	SAE40	SAE50
ISO VG (cSt40°C) / Manufacturer	32	68	100	150	220
EMG Lubricants	DTE Oil Light	〃 Heavy medium	〃 Heavy	Vacuoline 528	〃 533
Eneos	Super Mulpus DX32	〃 68	〃 100	〃 150	〃 220
	FBK Oil RO32	〃 68	〃 100	〃 150	〃 220
Idemitsu Kosan	Daphne Mechanic Oil 32	〃 68	〃 100	〃 150	〃 220
Shell Lubricants Japan	Tellus Oil S2 M 32	〃 S2 M 68	〃 S2 M 100	Morlina S2 B150	〃 S2 B220

■ Table 27: Examples of Low and High Temperature Lubricants

The following lubricants can be applied when conveyor chain is used at low or high temperatures.
Use an equivalent if using another brand.

Ambient and Operating Temperature	−50°C to −25°C	−25°C to 0°C	−10°C to 60°C	60°C to 200°C	150°C to 250°C
Manufacturer/ Lubricant	Dow Corning Toray SH510 Shin-Etsu Chemical KF50 Momentive Performance Materials TSF431	Japan Sun Oil Suniso 4GS Shell Lubricants Japan 68K Refrigerant Oil	See above	EMG Lubricants Mobil Vacuoline 546 Moresco Moresco Hilube L-150	Moresco Moresco Hilube R-220 Sumico Lubricant High Temp Oil ES Sato Sepcial Oil Hot Oil No. 75

Note: The product names on this page are trademarks or registered trademarks of their respective owners.

Handling

Tension Adjustment

The correct amount of chain slack is essential for proper operation of the chain. When the chain is too tight, working parts such as chain, sprocket wheel, shaft, bearings, etc., carry a much heavier load, accelerating chain wear. On the other hand, too much slack is also harmful and causes the chain to ride up on the sprocket teeth.

1. Frequency of Adjustment

The chain has a tendency to stretch a certain amount at the beginning of operation due to slight distortion of its components. After such initial elongation, the chain stretches slightly, but constantly, as a result of normal wear. To maintain proper chain tension, adjustments, if necessary, should be made at regular intervals.

Assuming eight hours of operation a day, the frequency schedule for inspection and adjustment is given in the table below. When working hours are increased, the frequency of adjustment should be increased accordingly. Neglecting careful inspection increases the chances of an accident.

1st week after start of operation	Once a day
2nd to 4th week after start of operation	Twice a week
Thereafter	Twice a month

2. Insufficient Take-Up Adjustment

If there is still excessive slack in the chain even after the take-up adjustment is fully tightened, shorten the chain by removing two links. See pages 163 to 169, "How to Cut Chain" for the steps involved.

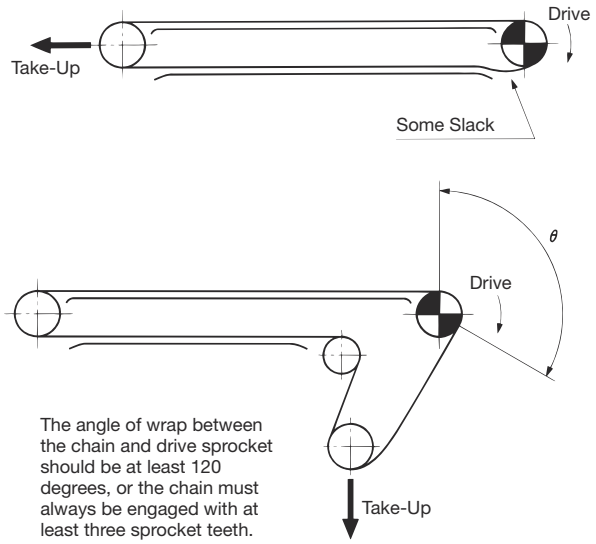

Figure 27: Adjusting Chain Slack

3. Even Adjustment of Take-Up on Both Sides

Where two parallel chains are adjusted by two independently operated take-ups, care must be taken to ensure even stroke on both the left and right side (not needed when the take-ups are cooperating screw type or counterweight type). An uneven adjustment will cause the link plate and the side of the sprocket teeth to interfere with each other and result in an overload condition. When the right and left sides are uneven, the two chains should be made even by replacing a section of the right and left chains.

Trial Run

After installing the chain, carry out a trial run and check the following items before you actually start running the chain.

1. Before Trial Run

1) Connecting spring clips and cotter pins are installed correctly.
2) Chain slack is adjusted properly.
3) Lubrication is adequate.
4) The chain does not come into contact with casing or covers.

2. Trial Run

1) There are no strange noises.
2) There is no excessive chain vibration.
3) The chain does not ride up on the sprockets.
4) The chain is not jammed into the sprockets.
5) The rails and sprockets are installed correctly.
6) The rollers rotate smoothly.
7) There are no stiff areas during chain articulation.

⚠ Caution

An unloaded trial run should be conducted after installation by intermittently switching the system on and off several times. After inspection, a continuous unloaded trial run should be conducted. Prior to the trial run, be sure to lubricate the chain to allow lubricant to work into various components.

When installing slats, aprons, or buckets on chain attachments, carry out a trial run with the bolts and nuts temporarily tightened, and fully tighten them before the actual run.

Inspection

Frequently inspect the chain during the initial operating period in order to carry out necessary adjustment.
Inspect the following items.

1) Unusual wear of chain.
2) Slack in chain.
3) Vibration and jerking of chain.
4) Unusual wear of sprocket, unusual contact of sprocket with other components due to eccentricity, debris accumulation in teeth valleys.
   When the sprocket properly engages with the chain, even contact is represented by the trace of contact shown as A in the illustration, while uneven trace of contact shown as B in the illustration represents improper installation of the sprocket or a twisted chain. Rechecking is needed. Proper contact should be traced a little above the valley. However, when initial tension remains in the slacked side of the chain, the chain slightly contacts the valley. However, even in this case, strong contact should be traced around A. With idlers and tighteners, contact happens at the middle of the valley.

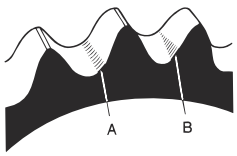

Figure 28: Trace of Contact

5) Too much guide rail wear.
6) Any abnormality in the lubricating system.

◆ Causes of Vibration, Jerking, and Unusual Wear

1) Overload, glass fragments caught between components.
2) Warping of the chain on the return side.
3) Insufficient lubrication or no lubrication.
4) Wear of the sprocket.
5) Unusual wear or breakage of the chain.

Handling

Usage Limits

1. Chain Wear Elongation

The chain should be measured by stretching it slightly to remove any backlash or looseness. Measure the distance of the inside (L_1) and outside (L_2) of rollers at both ends of the measured links to obtain measurement (L). When measuring, use at least 6 to 10 links to help keep any measuring error to a minimum.

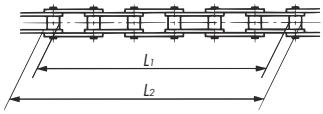

$$L = \frac{L_1 + L_2}{2}$$

$$\text{Chain wear elongation (\%)} = \frac{\text{Measured length } (L) - \text{Standard length}}{\text{Standard length}} \times 100\%$$

Standard length = Chain pitch x No. of links

The chain should be replaced when wear elongation is greater than 2% of the chain pitch.

A chain wear measurement scale that allows easy checking of pitch stretch is available from Tsubaki. Refer to the Drive Chain and Sprockets catalogue.

For Lambda Chain, if the chain elongation reaches around 0.5%, then its oil has run out. Indicators of this condition are red wear dust between the plates and occurrence of poor chain articulation. In this situation the chain is no longer usable and should be replaced.

2. R Rollers

When wear between the bush and roller causes the under surface of the link plate to contact the guide rail, the chain has usually reached the end of its usable service life. When the link plate starts contacting the guide rail, rolling contact suddenly turns into sliding contact between the link plate and rail, resulting in greater wear, an increase in chain load, and a reduction in transmitted power.

3. S Rollers

The chain has reached the end of its service life as soon as holes or cracks appear on the rollers due to wear.

4. Link Plates

For conveyor configurations in which link plates move directly on the material to be conveyed or on a guide rail, the service life has come to an end when the worn section equals H/8, as shown in the drawing.

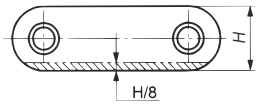

Figure 30: Plate Width Wear

5. Sprockets

When the sprocket is worn as illustrated below (to the left), the chain is prone to being caught by the tips of the teeth (A), making the disengagement of the chain from the sprocket difficult, hence resulting in vibration of the chain. Though wear allowance depends on the type of conveyor and the size of the chain to a certain extent, if the sprocket is replaced when the wear reaches 0.3 to 1.0 mm, damage to the chain can be avoided. When the sprocket is worn in the direction of the tooth width as illustrated below (to the right), the shaft may not be properly aligned and should be corrected.

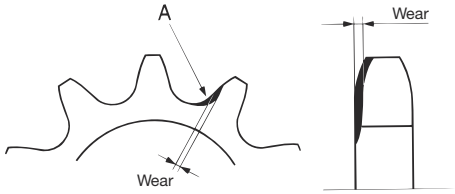

Figure 32: Wear of Sprocket Teeth

Other Precautions

1. Shutdown/Restart

Stop the conveyor under unloaded conditions to prevent remaining material from overloading the system when the conveyor starts again. Also, if the conveyor system has been shut down for a long period of time, be sure to inspect the chain before restarting.

2. Securing Conveyor Parts

Parts fastened to the conveyor such as buckets, aprons, slats, etc., tend to loosen as a result of vibration. Pay careful attention to fastening nuts and bolts, and check periodically that they are tightly fastened.

3. Temperature and Prevention of Freezing

Conveyor damage may occur when differences in temperatures (between day and night in winter) are extreme. Under these circumstances, operate the conveyor carefully, taking into account any variations in temperature as well as appropriate lubrication, the moisture content of the conveyed material, inspections, etc.

4. Spare Chain Storage

We recommend that a spare chain be prepared in advance in the unlikely event of a failure or accident. This spare chain should be stored in a dry space. Also, if the chain is to be stored for a long period of time, it should be coated with a rust-preventive oil. For convenience, attach a tag noting the product name, chain number, date of purchase, and equipment it is intended to be used on.

5. Record of Use and Maintenance

Beyond the maintenance and inspection items mentioned above, after installing the conveyor, prepare a record of the expected capacity to be conveyed, conveying speed, rpm of main shaft, electric current, voltage, power, working hours, actual conveying capacity, inspection dates, lubrication dates, details of problems, and the like. This will serve as protection against unexpected accidents. When updated on a regular basis, this record will also be convenient for maintenance and repairs.

6. Cleaning

The chain should be cleaned periodically to remove contamination or particles of conveyed material from the chain and rail.

7. Storage of Chain and Sprockets

Chain and sprockets should be stored in a place free of dust and dirt and where they will not be exposed to rain. To prevent rust, use a brush to coat sprockets with oil. No rust-prevention treatment is applied at the time chain is shipped. Therefore, when storing chain, coat with a rust-preventative oil and inspect periodically for corrosion.

Troubleshooting

When there is significant damage and breakage to the chain and sprockets, please carry out the following procedures.

1. General

Symptom	Possible Causes	Remedy
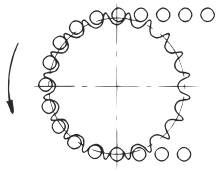 Chain rides up on the sprocket	The chain and sprocket do not match	Replace the chain and sprocket with the correct size.
	Excessive load	Reduce the load, add lubrication, or increase the number of strands or the size of the chain.
	Elongation of the chain due to wear or excessively worn sprocket teeth	Replace with new chain and sprockets.
	Angle of chain wrap on the sprocket is insufficient	Angle of chain wrap should be at least 120 degrees or chain must be engaged with at least three sprocket teeth.
	Inadequate back-tension	Install or adjust the catenary or take-up idler.
	Distance between the center of the chain and the sprocket do not match	Inspect and correct.
Unusual noises	Improper installation of the sprocket or shaft	Inspect and correct.
	Chain casing or bearings are loose	Tighten all bolts and nuts.
	Excessive or insufficient slack in the chain	Adjust the distance between the shafts to obtain the proper amount of slack.
	Excessively worn chain or sprocket	Replace with new chain and sprockets.
	Lack of or unsuitable lubrication	Provide proper lubrication according to the operating conditions.
	Interference of casing with the chain or other moving parts	Inspect and correct.
	Improper guide rail installation 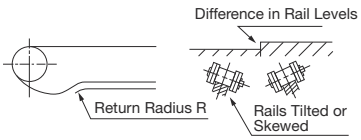	Inspect and correct.
Chain winds onto the sprocket (poor separation from the sprocket teeth)	Excessive slack in the chain	Adjust the chain length or distance between shafts. Install a tensioner.
	Elongation of the chain due to wear or excessively worn sprocket teeth	Replace with new chain and sprockets.
	The chain and sprocket do not match	Replace with new chain and sprockets.
	Poor chain articulation due to rust; inappropriate lubrication; harsh environment	Remove and replace the chain. Protect the chain from the environment by appropriate lubrication and/or cover.

Handling

Symptom	Possible Causes	Remedy
Excessive wear on the inside surface of the link plates and sides of the sprocket teeth	Improper installation	Correct sprocket and shaft installation.
	The chain is being pushed to the side	Remove the cause of the push and/or switch to a chain with guide rollers.
Excessive wear on the sides of the link plates and pin heads	Improper installation of guides, etc. 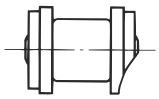	Check the condition of the guides and increase the gap between the guides and the chain.
Improper flex or bending of the chain	Deformation of the chain caused by improper installation	Inspect installation and correct as necessary.
	Contamination from metal debris or dirt because of improper lubrication	Remove the chain, wash it thoroughly, and provide proper lubrication.
	Excessive load, bent pin, or cracked bush	Reduce the load or increase the number of strands or the size of the chain.
	Corrosion or rusting	Install a chain casing to protect the chain.
	Inadequate lubrication	Provide adequate lubrication.
	Foreign particles or conveyed items stuck in clearance	Install a casing to protect the chain.
	Use in extremely high temperatures	Provide adequate clearance. (Contact a Tsubaki representative regarding this situation.)
Spreading of link plates	Uneven or excessive load caused by improper installation 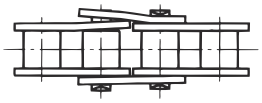	Replace with new chain and correct installation.

2. Link Plates

Symptom	Possible Causes	Remedy
Breakage of link plate	Excessively large shock load	Reduce shock loads by making start-up, stopping, and other actions smoother. Install a shock absorber. Increase the number of strands or the size of the chain.
	Vibration in the chain	Install an anti-vibration device such as a tensioner or idler.
	Corrosion	Replace with new chain. Install a casing to protect the chain. Periodically clean and lubricate the chain.

1) Static Fracture
Stretching the link plate with a tensile load beyond its breaking load will cause it to stretch and then break.

2) Fatigue Fracture
By repeatedly applying a load past its fatigue limit (fatigue strength), the fatigue will start at holes and then suddenly cause the chain to break.

3) Offset Link Plate Fatigue
Offset link plates are bent at the center, and the resulting concentration of stress at the bend can cause a fatigue break. Avoid using offset links in high-pressure applications.

Cracks in the link plates (fatigue), which are perpendicular to the direction of pull	Loads are greater than allowable	Remove all large or excessively repetitive loads. Increase the number of strands or the size of the chain.
	Repetitive load on attachments	Reduce excessive loads. Increase the size of the chain to increase the allowable load of the attachments.
Deformation of link plate holes	Excessive load	Replace with new chain. Remove the cause of the excessive load.
Corrosion stress cracks (bow-shaped cracks in the link plate)	The chain is being used in an acidic or alkaline environment (problem not caused by repetitive loads)	Replace with new chain. Install a casing to protect the chain from the environment. Consider a chain with a high resistance to corrosion stress cracking.

Handling

3. Pins

Symptom	Possible Causes	Remedy
Breakage of pin	Excessively large shock load	Reduce shock loads by making start-up, stopping, and other actions smoother.
	Subject to a repetitive load greater than the fatigue limit of the pin	Remove the large repetitive load. Increase the number of strands or the size of the chain.
	Corrosion	Install a casing to protect the chain. Periodically clean and lubricate the chain.

1) Static Fracture
The type of fracture found when subjecting the chain to the breakage test. Occurs when the chain is subjected to a load greater than its breakage strength.

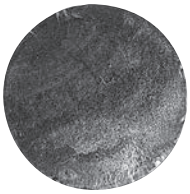

2) Fatigue Fracture
Occurs when the pin is repetitively subjected to loads greater than its fatigue limit. Recheck the size of the peak load and formulate a countermeasure.

3) Shock-Induced Bending Fracture
The pin is subjected to a large shock load and breaks. The side with the initiating point receives tensile load and the fracture progresses from this point. The pin is especially susceptible to becoming weak with regard to bending when the surface of the pin has corroded. This type of phenomenon occurs quite easily.

Pin rotates or begins to stick out	Excessive load or improper lubrication	Replace with new chain. Improve the lubrication or loading conditions.
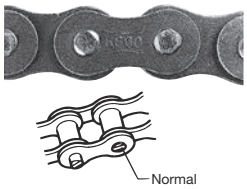	Operating a chain at high load without proper lubrication can create friction between the pin and bush, causing the pin to rotate. In this condition, the pin may come out, leading to chain breakage.	Replace with new chain immediately. Do not weld or reuse the pins. Dispose of the old chain to be sure that it is not used again by mistake. Also, if the pin head or link plate surface is worn, check the installation.

4. Bushes/Rollers

Symptom	Possible Causes	Remedy
Roller and/or bush cracks (falls off)	Inadequate lubrication	Provide adequate lubrication according to the operating conditions. Replace with new chain.
Roller does not rotate, roller is corroded on one side	RS25, RS35	These are bushed chains and have no rollers.
	The inner link plate is moving inward, or the bush is cracked	Replace with new chain. Re-inspect the installation and load conditions.
	Foreign particles or conveyed items have gotten between the bush and roller	Periodically clean the chain. Install a casing to protect the chain.
	Excessive load on the rollers	Reduce excessive loads. Increase the size of the chain.
	Particles of the conveyed material or other foreign particles have built up on the frame	Periodically clean the chain. Install a partition to protect the chain.
	Rust on the bush and rollers	Select the appropriate specifications (materials).
	The inner plate is moving inward	Replace with new chain. Re-inspect the installation and load conditions.
Roller is opening up	Excessive load	Reduce the load. Provide adequate lubrication.
Roller is becoming hourglass shaped	Excessive load or inadequate lubrication	Replace with new chain. Improve the lubrication or load conditions.

MEMO

Small Size Conveyor Chain Inquiry Sheet

Please give us the following information when placing an order for or inquiring about a chain:

Machine Used		**Maximum Load Applied to Chain**	kN{kgf}
Object to Be Conveyed		**Chain Pitch**	mm
Corrosiveness		**Attachment**	Installed on every link
Abrasiveness		**Conveyance Method**	Pushed by Dog, Direct Conveyance, Other
Temperature of Conveyed Object	Temp. °C	**Operating Time**	h/d
Dimensions of Conveyed Object		**Operating Method**	Continuous, Intermittent, Reverse (yes/no)
Mass of Conveyed Object	MAX kg/piece	**Lubrication**	Permitted / Not Permitted
Conveyance Amount	MAX t/h (loose items) kg/conveyor (individual items)	**Motor Used**	AC/DC kW × r/min × (no. of motors)
		No. of Sprocket Teeth	NT (PCD mm)
Conveyor Length	m	**Hole Dia. of Sprocket Shaft**	Dia. H8・H7
Lifting Height	m	**Hub**	Type( ) Dia. × L
No. of Strands	strands (spacing m)	**Key Groove**	Not required ( ) JIS・b × t parallel / Driving
Chain Speed	m/min	**Finishing of Teeth**	Machine-cut Induction hardening

Brief description of machine used and chain: Configuration of conveyor, method for loading and unloading of objects to be conveyed, rail configuration, method of receiving on return side, and other remarks.

Company Name: **Division / Title:**

Name: **Tel:**

Date: **Fax:**

For Your Safety When Using the Chain

Warning

To avoid danger, observe the following rules.

- Do not use chain or chain accessories for any purpose other than their originally intended use.
- Never perform additional work on chain.
  - Do not anneal any chain parts.
  - Do not clean chain with acids or alkalis. These may cause cracking.
  - Never attempt to electroplate chain or chain parts. This may cause hydrogen embrittlement.
  - Do not weld chain. Heating effects will cause weakening and cracking.
  - When a torch is used to heat or cut chain, remove the links on each side and do not reuse them.
- When replacing a worn or damaged part, do not replace just the worn or damaged part. Replace all parts with new parts.
- If a material that causes hydrogen embrittlement (acid, strong alkali, battery fluid, etc.) comes in contact with the chain, immediately stop using the chain and replace it with new chain.
- When using chain in a lifting device, set up a safety barrier and do not allow anyone to go under the equipment.
- Always install safety equipment (safety covers, etc.) on chain and sprockets.
- Strictly observe the rules and regulations concerning occupational safety and health in your region/country.
- When installing, removing, inspecting, maintaining, and oiling chain:
  - Perform the work as instructed in the manual, catalog, or other documentation that was provided with the product.
  - Before starting work, turn off the power switch and take measures to prevent it from being turned on accidentally.
  - Secure the chain and parts to prevent them from moving freely.
  - Use a press tool or other special tools to separate or connect chain, and follow the correct procedures.
  - Remove and insert pins and rivets in the correct direction.
  - Wear clothing and protective gear (safety glasses, gloves, safety shoes, etc.) that are appropriate for the work.
  - Only experienced personnel should perform chain replacement.

Caution

To prevent accidents, observe the following rules.

- Understand the structure and specifications of the chain that you are handling.
- Before installing chain, inspect it to make sure no damage occurred during delivery.
- Inspect and maintain chain and sprockets at regular intervals.
- Chain strength varies by manufacturer. Only Tsubaki products should be used when chain is selected using Tsubaki catalogs.
- Minimum tensile strength refers to the failure point when the corresponding load is applied to the chain once and does not refer to the allowable operational load.
- Always ensure that the final customer receives the instruction manual.
  - If you do not have the instruction manual, contact a Tsubaki representative with the product name, series name, and chain/model number to receive the appropriate manual.
- The product information given in this catalog is mainly for selection purposes. Thoroughly read the instruction manual before actually using this product, and use the product properly.

Warranty

1. Warranty Period

Products manufactured by Tsubakimoto Chain Co. (“Products”) are warranted against defects in materials and workmanship for eighteen (18) months from the date of shipment from the factory or twelve (12) months from the date the Products are first placed into operation (calculated from the date the Products have been installed on the customer’s equipment), whichever comes first.

2. Scope of Warranty

During the warranty period, if defects arise in the Products when installed, used, and maintained correctly in accordance to Tsubakimoto Chain’s catalogs, installation manuals (including any documents specially prepared and provided to the customer) and the like, Tsubakimoto Chain will repair or replace such defective Products thereof free of charge upon confirmation of said defect by Tsubakimoto Chain. This warranty shall only apply to Products received, and Tsubakimoto Chain shall not be liable for the following costs and/or damages (including installation manuals or other documents specially prepared and provided to the customer):

(1) Costs required for removing the defective Products from or re-installing the replacement Products on the customer’s equipment for replacement or repair of the defective Product, as well as any associated installation costs.

(2) Costs required to transport the customer’s equipment, if needed, to a repair shop or the like.

(3) Any consequential or indirect damages or loss of profits or benefits the customer may incur due to the defects or repair of the Products.

3. Out of Warranty Service and Repair

Regardless of the warranty period, Tsubakimoto Chain will provide investigation, repair, and/or manufacture of the Products for a fee should the Products experience problems or anomalies under the following situations.

(1) Placement, installation (including connecting and disconnecting), lubrication, or maintenance of the Products not in accordance with Tsubakimoto Chain’s catalogs, installation manuals (including documents specially prepared and provided to the customer), or the like.

(2) Use of the Products (including operating conditions, environment, and allowances) not in accordance with Tsubakimoto Chain’s catalogs, installation manuals (including documents specially prepared and provided to the customer), or the like.

(3) Inappropriate disassembly, modification, or processing of the Products by the customer.

(4) Use of the Products with damaged or worn products. (Example: Use of the Products with a worn sprocket, drum, rail, or the like.)

(5) When the operating conditions exceed the performance of the Products as selected using the Tsubakimoto Chain selection method.

(6) Use of the Products in conditions other than what have been discussed.

(7) When consumables such as bearings, oil seals, and lubricant in the Products deplete, wear, or degrade.

(8) When secondary damage occurs to the Products due to initial or primary damage or failure to the customer’s equipment.

(9) Damage or failure of the Products due to forces majeure such as natural disasters.

(10) Damage or failure of the Products due to unlawful conduct by third parties.

(11) Damage or failure of the Products due to causes not attributable to Tsubakimoto Chain

The logos, brand names, or product names in this catalog are trademarks or registered trademarks of Tsubakimoto Chain Co. and/or its subsidiaries and/or affiliates in Japan and/or other countries.

TSUBAKIMOTO CHAIN CO.

Japan	Tsubakimoto Chain Co.	https://tsubakimoto.com/

Global Group Companies

AMERICAS

United States	U.S. Tsubaki Power Transmission, LLC	https://www.ustsubaki.com/
Brazil	Tsubaki Brasil Equipamentos Industriais Ltda.	https://tsubaki.ind.br/
Canada	Tsubaki of Canada Limited	https://tsubaki.ca/

EUROPE

Netherlands	Tsubakimoto Europe B.V.	https://tsubaki.eu/
France	Kabelschlepp France S.A.R.L.	https://tsubaki-kabelschlepp.com/fr-fr/
Germany	Tsubaki Deutschland GmbH	https://tsubaki.de/
	Tsubaki Kabelschlepp GmbH	https://tsubaki-kabelschlepp.com/de-de/
Italy	Kabelschlepp Italia S.R.L.	https://tsubaki-kabelschlepp.com/it-it/
Spain	Tsubaki Ibérica Power Transmission S.L.	https://tsubaki.es/
United Kingdom	Tsubakimoto UK Ltd.	https://tsubaki.eu/
Slovakia	Kabelschlepp-Systemtechnik, spol. s.r.o.	https://tsubaki-kabelschlepp.com/sk-sk/
Poland	Kabelschlepp Sp. z o.o.	https://kabelschlepp.pl/

INDIAN OCEAN RIM

Singapore	Tsubakimoto Singapore Pte. Ltd.	https://tsubaki.sg/
Australia	Tsubaki Australia Pty. Limited	https://tsubaki.com.au/
India	Tsubaki India Power Transmission Private Limited	https://en.tsubaki.in/
Indonesia	PT. Tsubaki Indonesia Trading	https://tsubaki.id/
Malaysia	Tsubaki Power Transmission (Malaysia) Sdn. Bhd.	https://en.tsubaki.my/
New Zealand	Tsubaki Australia Pty. Limited - New Zealand Branch	https://tsubaki.com.au/
Philippines	Tsubakimoto Philippines Corporation	https://en.tsubaki.ph/
Thailand	Tsubakimoto (Thailand) Co., Ltd.	https://tsubaki.co.th/
Vietnam	Tsubakimoto Vietnam Co., Ltd.	https://tsubaki.net.vn/

EAST ASIA

Republic of Korea	Tsubakimoto Korea Co., Ltd.	https://tsubakimoto-tck.co.kr/
Taiwan	Taiwan Tsubakimoto Trading Co., Ltd.	https://tsubakimoto.tw/

CHINA

China	Tsubakimoto Chain (Shanghai) Co., Ltd.	https://www.tsubaki-sh.cn/

The Tsubaki Eco Link logo is used only on products that satisfy the standards for environmental friendliness set by the Tsubaki Group.

Note: In accordance with the policy of TSUBAKIMOTO CHAIN CO. to constantly improve its products, the specifications in this catalog are subject to change without notice.
Catalog No. ME2503 ©2025/3 TSUBAKIMOTO CHAIN CO.