TSUBAKI™

CAM CLUTCH
Product Catalog

OVERRUNNING • INDEXING • BACKSTOPPING

www.ustsubaki.com

Tsubaki Cam Clutch Solutions

Over the last 50 years, Tsubaki engineers have spent thousands of man hours designing and improving uni-directional/mechanical clutches in an effort to improve reliability and performance. Evolution of the uni-directional clutch started with simple prop and ratchet type designs, and has progressed to the roller ramp and non-contact sensing cam type commonly used today. Innovative designs and features incorporated into our cam clutch products assure efficient and dependable operation in the harshest environments.

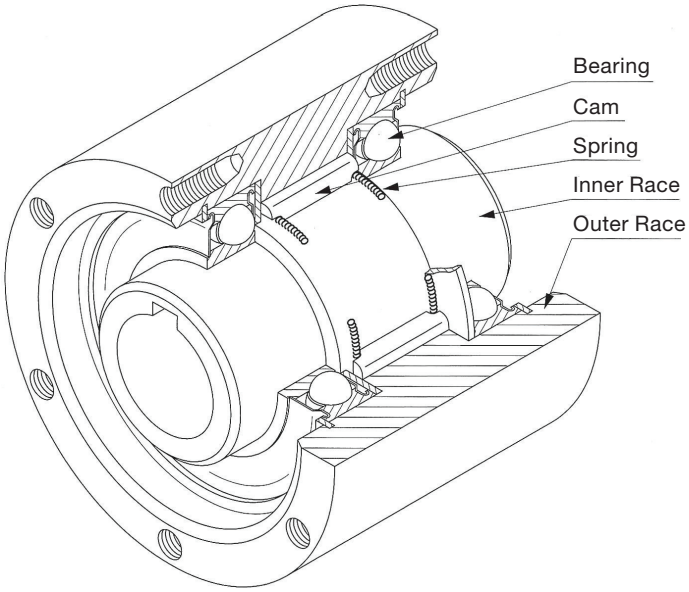

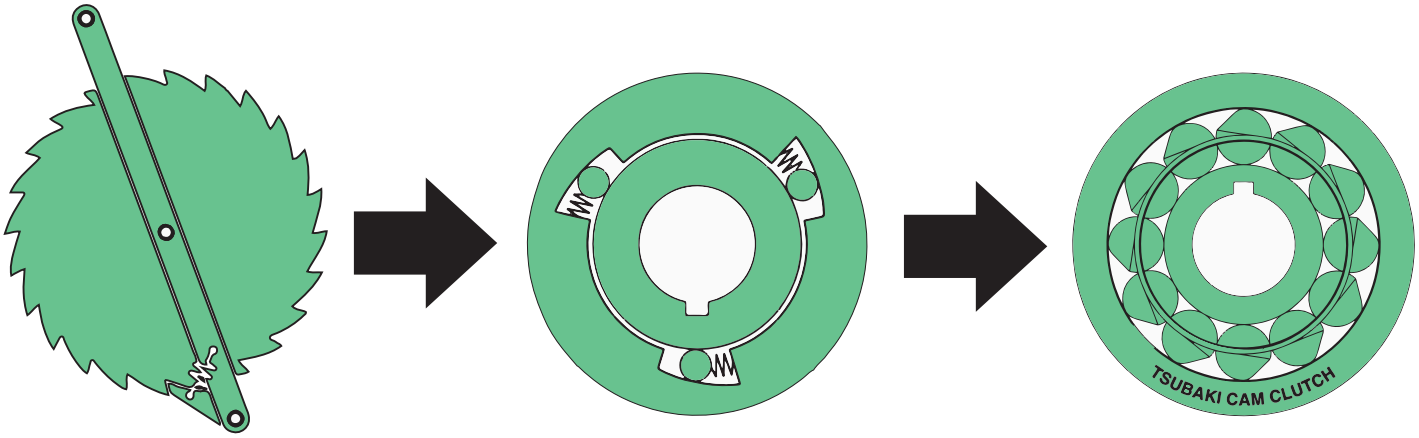

Ratchet Clutch | Roller Clutch | Tsubaki Cam Clutch

Typical Applications

Air Cleaning Plants
Agricultural Machines
Bucket Elevators
Compressors
Conveyors
Cranes and Hoists
Dry Cleaning Machinery
Duplicator Equipment
Heat-treatment Furnaces
Induced Draft Fans
Multi-state Conveyors
Packaging Machinery
Printing Machinery
Pumps
Punch Presses and Feeders
Power Plants
Refinery Equipment
Speed Reducers
Standby Power Units
Textile Looms
Two-speed Grinders
Fish Net Machines
Washing Machines
Wire Winding Machines

TABLE OF CONTENTS

Cam Clutch Product Overview	2
Cam Clutch Basics	4
BR Non-Contact Innovation	11
Backstop Clutch Selection Guide	12
Indexing Clutch Selection Guide	18
Overrunning Clutch Selection Guide	23
MGUS Series Cam Clutch	32
MGUS-R Series Cam Clutch	36
BB Series Cam Clutch	38
TSS Series Cam Clutch	42
TFS Series Cam Clutch	44
BUS200 Series Cam Clutch	46
PBUS Series Cam Clutch	48
MZ Series Cam Clutch	50
OB Series Cam Clutch	52
MIUS Series Cam Clutch	56
MZEU Series Cam Clutch	60
BREU Series Cam Clutch	67
BR-HT Series Cam Clutch	74
BRUS Series Cam Clutch	78
BSEU Series Cam Clutch	80
BS Series (BS30 to BS75) Cam Clutch	82
BS Series Torque Arm	85
BS-F Series (BS85F to BS465F)	86
BS/BS-F Series Safety Cover	88
CA Series	90
Engineering Section	92
Interchange Chart	92
Overrunning Application Request Form	110
Backstop Application Request Form	111

TSUBAKI

www.ustsubaki.com

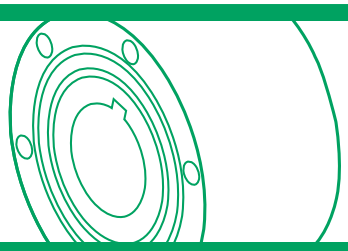

TSUBAKI CAM CLUTCH

TSUBAKI BACKSTOP CAM CLUTCH PRODUCTS

BS & BS-F

BS Series is designed for lower speed conveyor applications. The unique non-rollover cam design provides higher torque capacity, assuring full engagement.
Bore Range:
0.750" to 5.315" (20 to 135 mm)
Torque Range:
217 to 11,580 lbs. ft.

BS-F Series is designed for simple, drop-in installations to all major competitive backstop products. Uses unique seal design for maximum life, minimal maintenance.
Bore Range:
2.360" to 18.310" (60 to 465 mm)
Torque Range:
4,980 to 722,000 lbs. ft.

BSEU

BSEU Cam Clutches are a European variation popular on many bucket elevators in North and South America.
Bore Range:
0.787" to 3.543"
(20 to 90 mm)
Torque Range:
159 to 3,467 lbs. ft.
COMPETITOR MODELS:
Formsprag RSBW
Morse CR/BW
Stieber RSBW

CA

CA line of backstops are an integral part of the reducer. The unique non-rollover cam design is key and prevents damage to the gears, shafts and drive train. This is a drop-in replacement for Dodge® reducers.
Bore Range:
0.738" to 1.750"
(18.75 to 44.45 mm)
Torque Range:
45 to 901 lbs. ft.
COMPETITOR MODELS:
Dodge 24 Series

BR-HT

BR-HT Series is designed for backstop applications where high-speed overrunning is required. Lift off cam design assures minimal heat generation and longest life.
Bore Range:
0.787" to 5.118" (20 to 320 mm)
Torque Range:
77 to 269,950 lbs. ft.
COMPETITOR MODELS:
Formsprag RSCI; Ringspann FXM

BREU

BREU Series is designed for backstop applications where bearing support and modular construction is desirable.
Bore Range:
1.181" to 5.906"
(30 to 150 mm)
Torque Range:
447 to 25,009 lbs. ft.
COMPETITOR MODELS:
Formsprag RIZ; Stieber RIZ

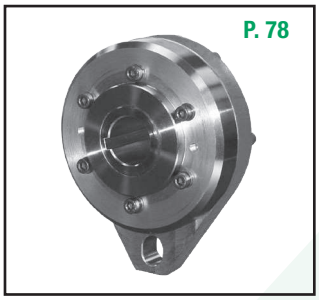

BRUS

BRUS series of high-speed external backstops utilize non-rollover and lift-off design cams. This is a drop-in replacement for Falk® BIF backstops.
Bore Range:
1.125" to 3.750"
(28.58 to 95.25 mm)
Torque Range:
700 to 4,420 lbs. ft.
COMPETITOR MODELS:
Falk BIF; Formsprag FHB; Ringspann FRXF

TSUBAKI INDEXING,

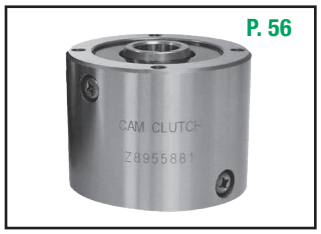

MIUS

MIUS Series is for mid-speed indexing applications up to 300 cycles a minute.
Bore Range:
0.500" to 6.250"
(12.7 to 160 mm)
Torque Range:
280 to 27,290 lbs. ft.
COMPETITOR MODELS:
Formsprag HPI
Morse MI
Marland RMS

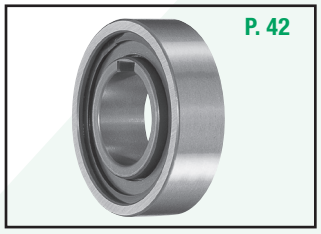

TSS

TSS Series clutch is designed for press fit installation. Outside dimensions are the same as series 62 ball bearings.
Bore Range:
0.314" to 2.362"
(8 mm to 60 mm)
Torque Range:
4 to 479 lb.ft.
(6 to 649 Nm)
COMPETITOR MODELS:
Formsprag AS
Morse NSS
Ringspann FCN

Dodge® is a registred trademark of Baldor Electric Company Corporation. Falk® is a registered trademark of Rexnord Industries, LLC.

PRODUCT
OVERVIEW

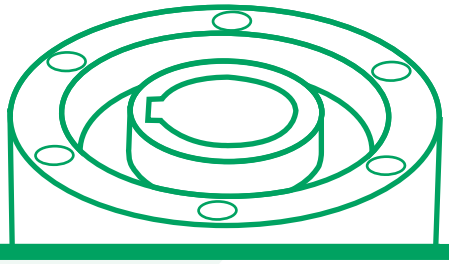

OVERRUNNING AND GENERAL CAM CLUTCH PRODUCTS

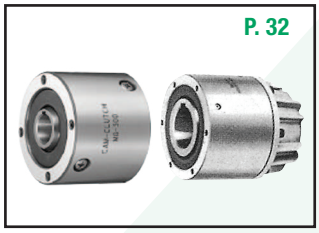

MGUS/MGUS-R

MGUS Series is suitable for applications which require low to high speed inner race. MGUS-R Series contains a built-in oil reservoir and can be used for backstopping applications.
Bore Range:
0.500" to 6.250"
(12.7 to 160 mm)
Torque Range:
280 to 27,290 lb.ft.
(380 to 37,000 Nm)
COMPETITOR MODELS:
Formsprag FSO; Morse MG; Ringspann FB

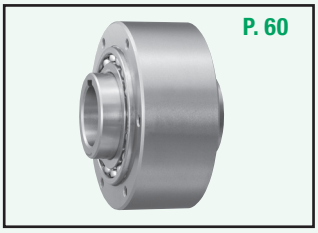

MZEU

MZEU Series is designed for overruning applications. These units come pre-lubricated, and can be adapted with flanges and torque arms to suit a wide variety of applications.
Bore Range:
0.472" to 5.906" (12 to 150 mm)
Torque Range:
44 to 24,930 lbs. ft.
COMPETITOR MODELS:
Formsprag GFR/GFRN
Stieber GFR

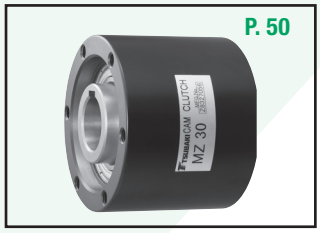

MZ

MZ Series is designed for low speed indexing applications that require inner or outer race overrunning. These units come pre-lubricated for easy installation and long service life.
Bore Range:
0.591" to 2.756"
(15 to 70 mm)
Torque Range:
137 to 2,242 lb.ft..
(186 Nm-m to 3,040 Nm)
COMPETITOR MODELS:
Stieber SMZ

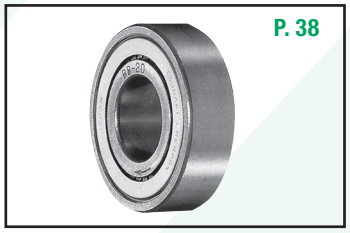

BB

BB Series Cam Clutch has the bearing dimensions and characteristics of a 62 Series type ball bearing. This design provides easy installation and is ideal for general overrunning applications
Bore Range:
0.590" to 1.575" (15 to 40 mm)
Torque Range:
21 to 192 lb.ft..
(29 to 260 Nm)
COMPETITOR MODELS:
Formsprag CSK; Morse KK; Ringspann ZZ; Stieber KK

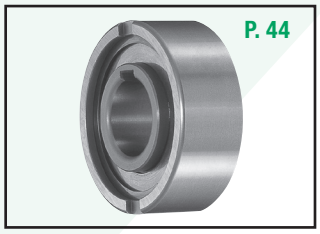

TFS

TFS Series has two vertical keyways on the outer race to assist with positioning. Outside dimensions are the same as series 63 ball bearings. Ideal for general overrunning applications.
Bore Range:
0.472" to 3.150" (12 to 80 mm)
Torque Range:
13 to 2,894 lbs. ft. **Competitor Models:**
Formsprag ASNU; Morse NFS; Ringspann FC/FDN

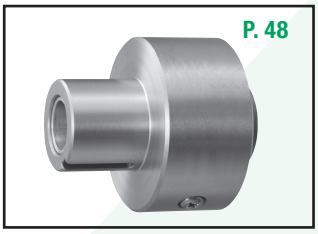

PBUS

PBUS Series clutch is packed with a special grease for general applications. The outer race has provision for mounting gears, pulleys, and sprockets.
Bore Range:
0 .375" to 1.750"
(10 to 45 mm)
Torque Range:
41 to 1,623 lb.ft.
(56 to 2,200 Nm)
COMPETITOR MODELS:
Formsprag FSR; Morse PB-A; Renold SB

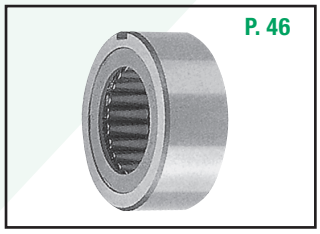

BUS200

BUS Series is specifically designed for shaft mounting applications that require high speed inner race overunnning or low to mid speed outer race overrunning.
Bore Range:
0.650" to 3.122"
(16.5 to 79.3 mm)
Torque Range:
39 to 1,025 lbs. ft.
Competitor Models:
Formsprag FS50; Morse B200; Renold SD

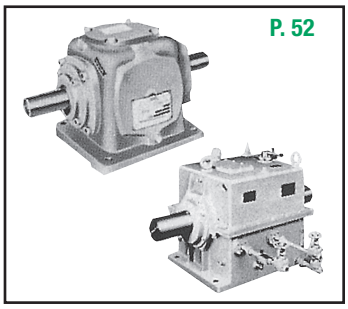

OB-ON/OF & OB-SF

OB-ON/OF Series is an enclosed unit housing cam clutch units and a common shaft. These units are used for high speed overrunning applications.
Torque Range:
2,318 to 59,270 lbs. ft.

OB-SF Series is an enclosed unit housing cam clutch units that allow for continuous high speed overrunning and engagement and high torque capacities.
Torque Range:
231 to 4,337 lbs. ft.

Typical Cam Clutch Applications			
Air cleaning plants Agricultural machines Bucket elevators Compressors Conveyors Cranes and hoists Dry cleaning machinery	Duplicator equipment Fish net machines Heat-treatment furnaces Induced draft fans Multi-state conveyors Packaging machinery	Printing machinery Pumps Punch presses and feeders Power plants Refinery equipment Speed reducers	Standby power units Textile looms Two-speed grinders Two-speed shiftovers Washing machines Wire winding machinery

CAM CLUTCH BASICS

Tsubaki Cam Clutch products are designed to transmit torque in one direction of rotation, and overrun (freewheel) in the opposite direction of rotation. All Tsubaki Cam Clutch products utilize the same principles of operation. Tsubaki offers various series of products to address the many types of applications where Cam Clutch products are most often used. The three most common types of applications are listed below.

1. Backstopping

In backstop applications, the clutches are used to prevent reverse rotation of drive shafts, which may cause damage to machinery and other expensive equipment. With the outer race of the clutch anchored stationary, the inner race can overrun freely in one direction of rotation. Reverse rotation is instantaneously prevented by the automatic engagement of the clutch. Typical backstop applications are in conveyor systems and gear reducers. Please reference ***Figure 1*** for an example of a typical backstopping application.

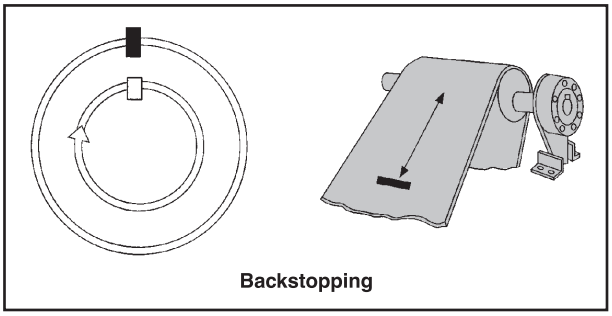

Figure 1: General backstopping application example

Backstopping Application & Selection begins on page 12.

Application	Characteristics	Cam Clutch Model Options
Low speed overrun	Less than 150 r/min.	BS, BS-F, BS-R, BSEU, BUS200, MZEU, MZ, MGUS, MGUS-R, TFS, TSS, BB
Medium speed overrun	150 to 700 r/min.	BREU, BR-T, BUS200, MZEU, MZ, MGUS, MGUS-R, TFS, TSS, BB
High speed overrun	700 to 3,600 r/min.	BREU, BR-HT, BRUS, MGUS-R, MZEU, MZ, TFS, TSS, BB

CAM CLUTCH BASICS

2. Indexing

In this mode of operation, reciprocating motion applied to the driving race of the clutch is transformed into uni-directional intermittent motion at the driven race. For example, on a feeding roller, the clutch is mounted on the roller and a torque arm is connected to the driving race of the clutch. A crank motion mechanism provides reciprocating motion to the driving race. The clutch drives in the forward stroke (index) and overruns on the return stroke, resulting in intermittent uni-directional motion of the feeding roller. Please reference ***Figure 2*** for an example of a typical indexing application.

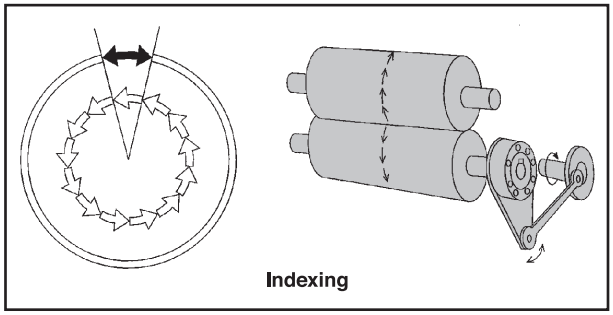

Figure 2: General indexing application example

Indexing Application & Selection begins on page 18.

Application	Characteristics*	Cam Clutch Model Options
High speed, Small feed angle	FREQUENCY: More than 300 cycles/min. FEED ANGLE: Less than 90°	**Contact Tsubaki**
Low-medium speed, Small feed angle	FREQUENCY: Less than 300 cycles/min. FEED ANGLE: More than 90°	MIUS, PBUS, MZEU, MZ, TFS, TSS, BB
Low speed, Large feed angle	FREQUENCY: Less than 150 cycles/min. FEED ANGLE: More than 90°	**Contact Tsubaki**
Backstop device for indexing	FREQUENCY: Less than 300 cycles/min. FEED ANGLE: More than 90°	MIUS, PBUS, MZEU, MZ, TFS, TSS, BB
Infinite variable feed	FREQUENCY: Less than 300 cycles/min. FEED ANGLE Less than 90°	MIUS, PBUS, MZEU, MZ, TFS, TSS, BB

* FEED ANGLE is the degree of rotating that the Cam Clutch must accommodate while indexing. See page 18 for more details.

Cam Behavior and Cam Clutch Operation

In indexing applications, reciprocal movement of a certain angle (θ) is provided at the outer race of the Cam Clutch to perform engagement and overrunning in turn continuously and obtain intermittent rotation. In the case of the Cam Clutch shown in the figure to the right, when the outer race moves from A to B, the Cam Clutch engages to rotate the inner race (of the driven side) by angle θ, i.e., from a to b. However, the Cam Clutch does not operate to stop the inner race at position b. When the outer race rotates in reverse from B to A, the Cam Clutch overruns while the inner race (of the driven side) does not rotate. By repeating this sequential movement, the inner race (of the driven side) rotates intermittently within the preset angle (θ).

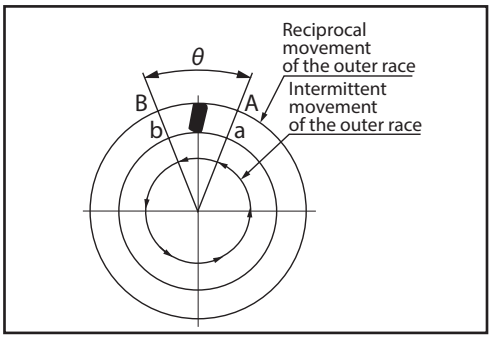

CAM CLUTCH BASICS

3. Overrunning

Clutches used in this type of application overrun at either the inner or outer race during the majority of the clutch operating time, and are occasionally called upon to lock up and drive. A typical application is a two-speed drive, where an electric motor and a geared motor are connected to a single driven shaft through one-way clutches. The machine can be driven by either the electric motor or geared motor. When the geared motor drives at low speed, the clutch engages. When the faster turning electric motor drives the machine, the clutch overruns. The clutch automatically switches between low speed and high speed. Please reference ***Figure 3*** for an example of a typical overrunning application.

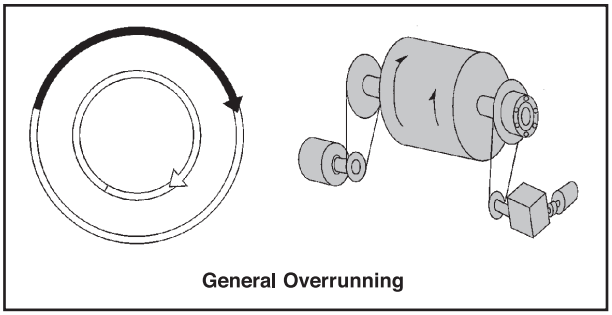

Figure 3: General Overrunning application example

Overrunning Application & Selection begins on page 23.

Application		Characteristics	Cam Clutch Model Options
Dual drive and two speed drive	High speed overrun, High speed engagement	OVERRUNNING: 700 r/min and up ENGAGEMENT: 700 r/min and up	MZEU, MZ, OB-series
	High speed overrun, Low to medium speed engagement	OVERRUNNING: 700 r/min and up ENGAGEMENT: Up to 700 r/min	MZEU, MZ, OB-series
	High speed overrun, Low speed engagement	OVERRUNNING: 700 r/min and up ENGAGEMENT: Up to 200 r/min	MZEU, MZ, BREU, BR-HT, OB-series
	Low to medium speed overrun, Low speed engagement	OVERRUNNING: Up to 700 r/min ENGAGEMENT: Up to 700 r/min	BB, PBUS, MGUS, MZEU, TFS, TSS, BUS200, MZ
Free wheeling		Overrunning when rotating speed of driven side becomes faster than the driving side	BB, PBUS, MGUS, MIUS, MZEU, TFS, TSS, BUS200, MZ
Manual drive		Continuous overrunning, manual engagement	BB, PBUS, MZ, MIUS, MZEU, TFS, TSS, BUS200
Normal engagement and reverse overrunning		Engage in one direction, Overrun in reverse direction	BB, PBUS, MGUS, MIUS, MZEU, TFS, TSS, BUS200

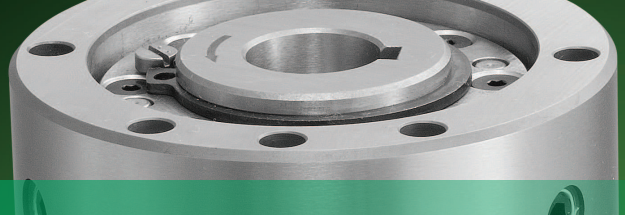

CAM CLUTCH BASICS

4. Basic Cam Clutch Construction

Figure 4 provides a sectional view of the components which reside inside of a Tsubaki MZ Series Cam Clutch. This illustration is typical of Tsubaki Cam Clutch construction. Each of the components identified are critical for function and performance of the assembly.

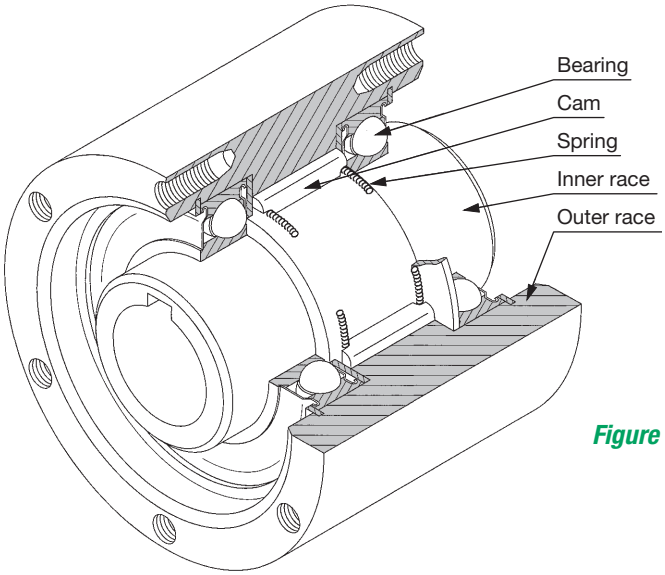

Figure 4: Cam Clutch major component parts

Part	Appearance	Function
Cam	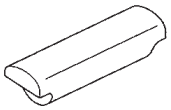	A number of cams set regularly in between the inner and outer races function as props or sliders depending on the relative rotating directions of the inner and outer races. This action causes engagement (clutching) and disengagement (overrunning) of the clutch inner and outer races. The cams are the vital component of a Cam Clutch, and they are available in various models and types to suit a variety of applications.
Inner Race Outer Race	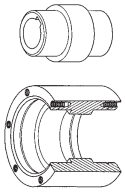	The inner and outer surface of the races are hardened and precision ground to enable the ability to withstand high compression stress during cam engagement.
Spring		Compressed springs are set at both ends of the cams to ensure that all of the cams contact the inner and outer races at all times. Thus, the cams are always ready for immediate engagement. This is extremely important so as to ensure that the load is spread evenly across all cams when they engage with the inner and outer races.
Bearing	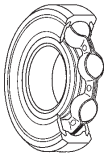	The bearings maintain concentricity of the inner and outer races and bear the radial load for the engagement of the cams and the inner and outer races. Maintaining concentricity is particularly important to ensure that the load is spread equally and simultaneously over the cams at the time of engagement.

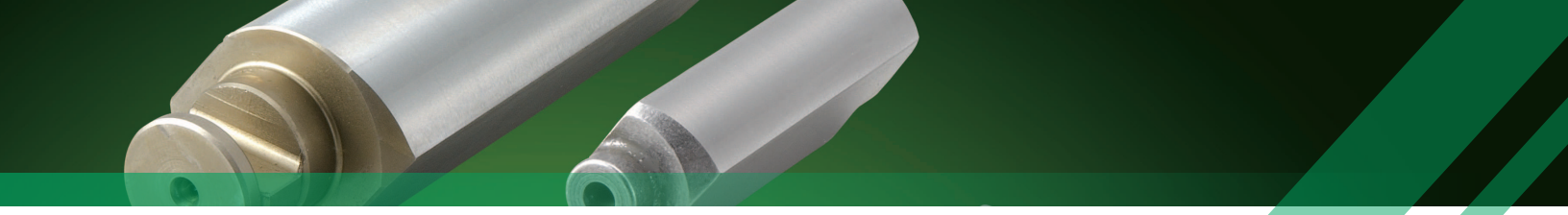

CAM CLUTCH BASICS

All Tsubaki Cam Clutches use a cam type construction. This is also referred to as a “sprag” style clutch. An older style clutch which Tsubaki does not supply is called a “Ramp & Roller” or simply a "Roller" clutch. The following is an explanation of the features of each type. This discussion mentions Tsubaki BS Series backstop clutches but is relevant to other Tsubaki Cam Clutches.

Non-rollover Backstop Cam

General Cam Construction

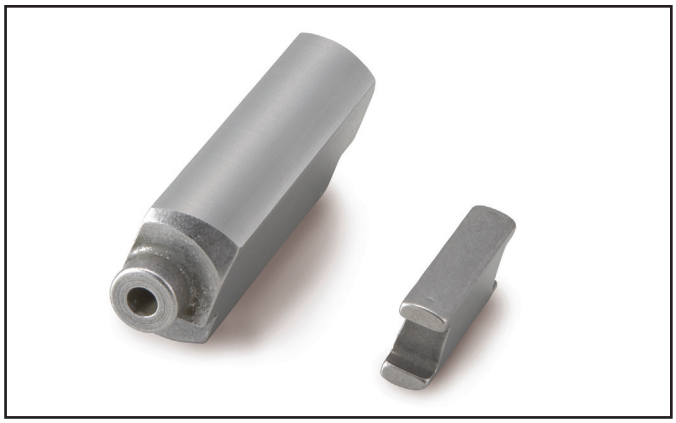

Cams and their constructions

The BS Series Cam Clutches use non-rollover cams which provide an additional level of safety. Even if a Cam Clutch has been selected appropriately for an application, unanticipated loads can occur. With a traditional cam profile, as used by some manufacturers, the unanticipated load might cause the cam to “rollover,” allowing the conveyor to move backward. The cam profile used by Tsubaki is most suited for the backstopping function, placing importance on the load distribution among multiple cams and a large surface cross section. Even if an unexpectedly large reverse torque occurs, the clutches will not roll over, preventing the conveyor from reversing.

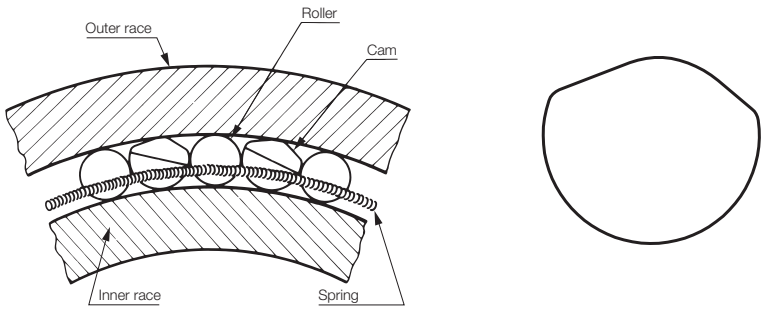

BS Series Cam Clutch construction and cam profile

BS and BS-F Series Cam Clutches use a structure utilizing cams and rollers alternately arranged for higher overrunning speeds and torque capacities.

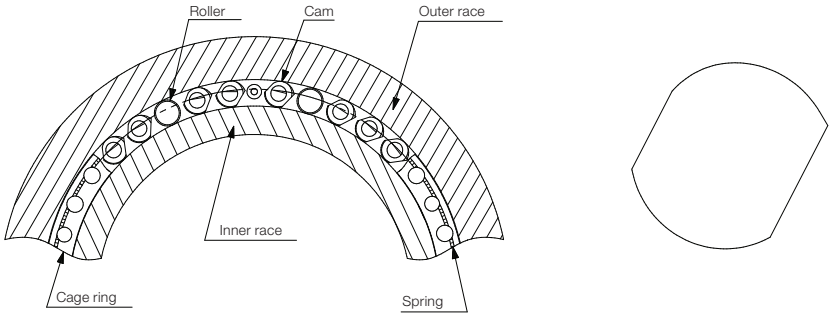

BS-F Series Cam Clutch construction and Non-rollover cam design

BS-F Series Cam Clutches employ a unique cam cage structure that supports the cams and rollers, which helps to further improve on the BS series’ torque capacities and over-running speeds. The cam cage design also helps the BS-F to provide the narrowest available footprint for a backstop with an I-beam torque arm.

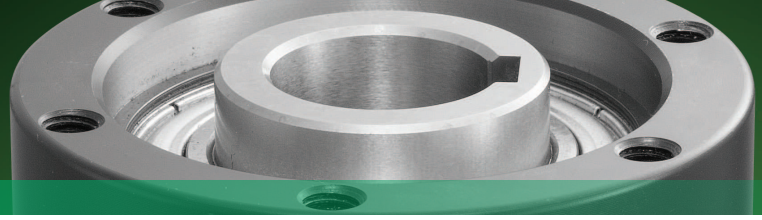

CAM CLUTCH BASICS

OPERATING PRINCIPLES

The outer race's rotation is stopped by the torque arm. Cams contact with the inner and outer races at points A and B respectively. AB maintains a constant engagement angle (strut angle º) with the center line O-O'. The strut angle is an integral part of the overrunning and engagement function of the BS Cam Clutch. See ***1.***

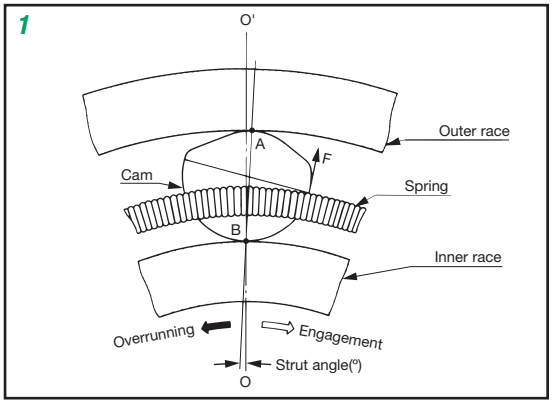

Springs give the rotational moment of F to cams ensuring precise contact is maintained between the inner and outer races. When the inner race (conveyor shaft) rotates in the direction of the black arrow, the inner race overruns smoothly because AB does not act as a strut. At this time, cams maintain light contact due to the spring force. See ***2.***

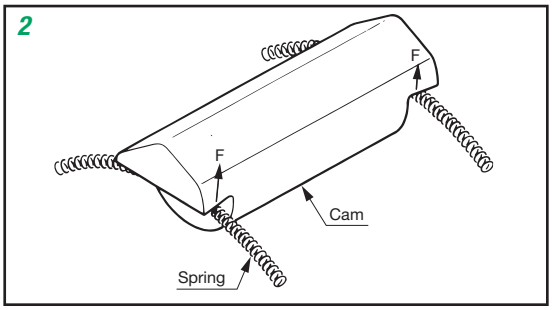

When the conveyor stops and the inner race (conveyor shaft) rotates in the direction of the white arrow, the inner race is locked immediately by the cams because AB acts as a strut, and prevents the conveyor from rotating in reverse. See ***3.***

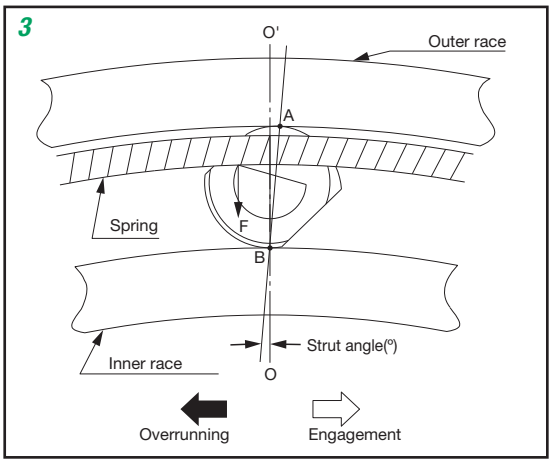

Self-lubrication function

When the inner race overruns, rollers also rotate so the cam and roller cage orbit around the outer circumference of the inner race at low speed. Grease in the cam and roller cage spreads completely throughout the insides of the Cam Clutch due to the orbital motion, thus maintaining good lubrication.

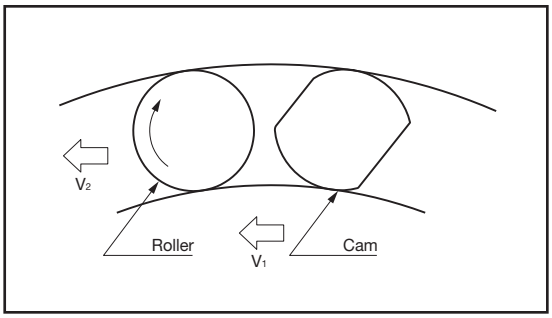

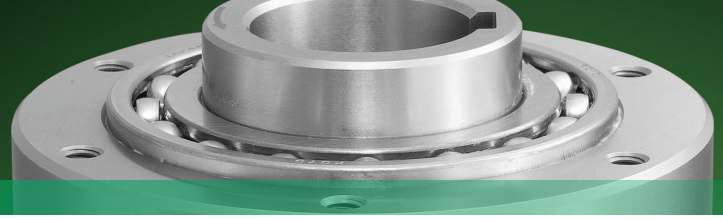

CAM CLUTCH BASICS

DISPLACEMENT OF CONTACT POINT FUNCTION

Rollers function as bearings and orbit while rotating on their axis, and supporting the outer race. There is a slight clearance between the rollers, the inner and outer races; therefore the bottom of the cam space between the inner and outer races is slightly wider compared with the top. Cams always maintain contact by spring force, and the slant of the cams is automatically different at the top and the bottom.

Cams continuously orbit by changing the contact point with the inner and outer races; therefore the wear on cams due to overrunning is diminished to the minimum, and the overrunning wear life on the Cam Clutch is at the maximum length.

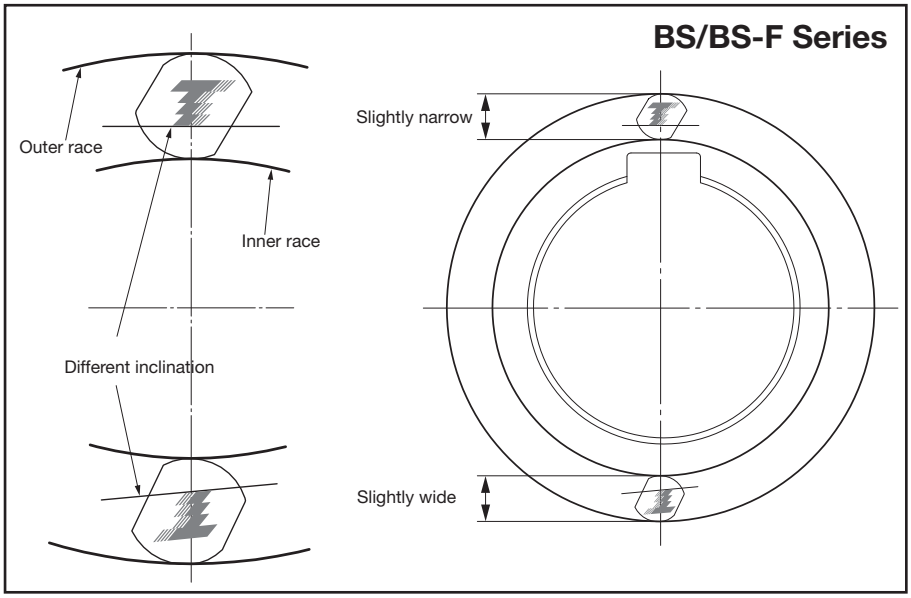

For the conveyor, which is always in an overrunning condition during the operation, as well as the self-lubrication function and the sliding speed diminishing function, it is one of the major features of a cam and roller cage to realize a long operating life.

Tsubaki BS and BS-F Cam Clutch compared with Ramp & Roller Clutch

Cam Clutch cams slide on the outer circumference of the inner race (Di) at the decelerated sliding speed due to the sliding speed diminishing function described above. The contact force of cams and inner and outer races are given only by spring force (Ps).

As for the Roller Clutches, rollers slide in the inner circumference of the outer race (Do) because rollers are built onto a roller cage which is connected with the inner race. Therefore the sliding speed of the Roller Clutch is faster when compared with that of the Cam Clutch between the cams and inner race. In addition, the contact force of rollers and the outer race is quite large in the Ramp & Roller design because the centrifugal force (Pc) caused by the rotation of the roller cage is added to the spring force (Ps).

The BS Cam Clutches overrun with low sliding speed and low contact force, thus the BS Cam Clutches have a long overrunning wear life when compared with the Roller Clutches.

Cam Clutch **Roller Clutch**

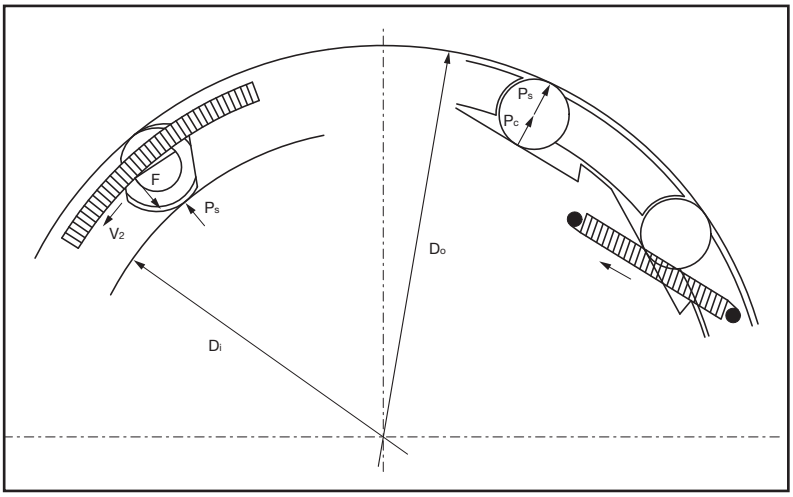

NON-CONTACT DESIGN EXTENDS SERVICE LIFE

Greatly Increased Service Life

Made possible by Tsubaki's extensive experience in mechanical power transmission, the cams used in the BR Cam Clutch offer a unique cross section that provides positive mechanical engagement only when needed. Otherwise, the Cam Clutch rotates freely with absolutely no mechanical contact in the clutch mechanism. The result is a greatly increased service life compared to conventional types.

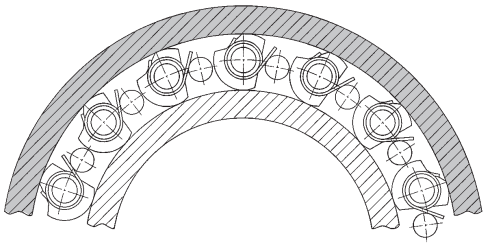

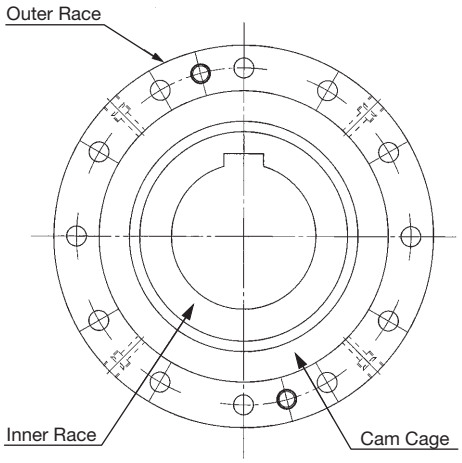

Backstop Applications with High-Speed Overrunning

When the Cam Clutch is stationary, the cam locks the inner and outer races together ***(Figure 5)***. When the inner race (load side) overruns at a high speed, the cam disengages by releasing the inner race ***(Figure 6)***. When the inner race stops, the cam rotates back into an engaged position. If the inner race tries to rotate in the reverse direction, the cams then serve as a stop between the anchored outer race and inner race to prevent reverse rotation and provide backstopping.

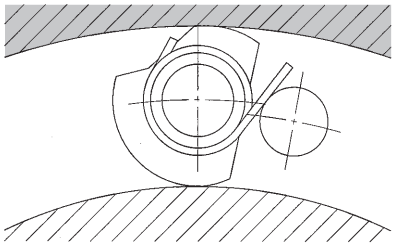

Figure 5: Entire Cam Clutch is stationary

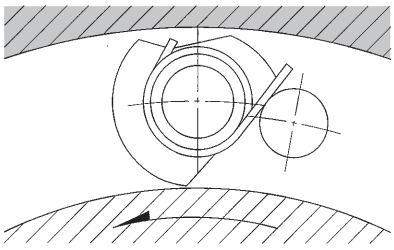

Figure 6: Inner race only turning

High-Speed and Low-Speed-Engaged Overrunning

When the Cam Clutch is stationary, the cam locks the inner and outer races together ***(Figure 5)***. When the inner race (load side) overruns at a high speed, the cam disengages by releasing from the inner race ***(Figure 6)***. When the high-speed rotation of the inner race stops and the inner race begins to rotate slowly, the cam rotates back into an engaged position. Then when you start to drive the outer race at low speed of rotation, the cams serve as a prop and drive the inner race at the same low speed of rotation. Please reference ***Figure 7***.

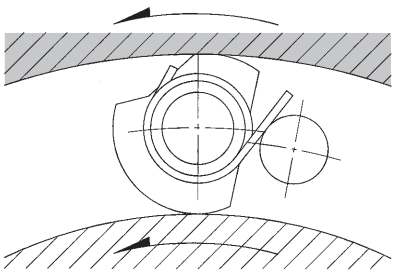

Figure 7: Inner and outer race locked and turning

A More Economical Design

The open-type BR Series features a simple design in which the Cam Clutch mechanism is incorporated in a cage between standard dimension inner and outer bearing races. This allows the Cam Clutch to be easily and economically integrated into a wide variety of mechanical systems. Tsubaki also offers a package-type Cam Clutch that incorporates a bearing assembly to reduce maintenance demands.

Backstop Clutch Selection Guide

BACKSTOPPING TO PREVENT REVERSE ROTATION

A backstop Cam Clutch is used to prevent the rotating shaft from being driven in the reverse direction. The Cam Clutch will continue overrunning while the shaft rotates and engages to prevent reverse shaft rotation.

Normally, the inner race is mounted on the rotating shaft, and the outer race is fixed to the machine frame. The inner race overruns in normal operation. As soon as the shaft begins to rotate in the reverse direction, the cams engage with the inner and outer races to prevent reversing. ***Figure 8*** depicts a typical setup for installing a backstop Cam Clutch.

Backstop Cam Clutch Speed Grouping

Backstopping Cam Clutches are grouped into three different speed classifications that are dependant on the overrunning speed and load conditions. The following table provides the three different classifications for consideration.

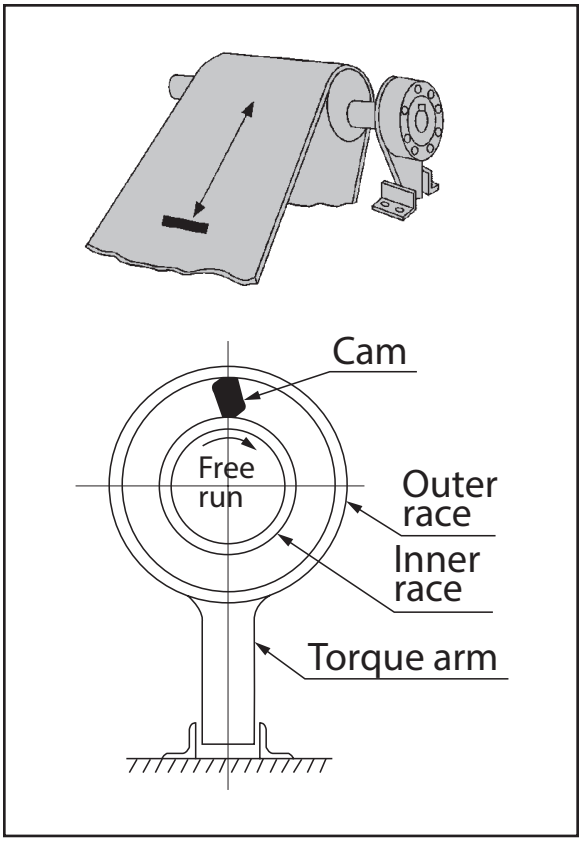

Figure 8: Typical backstop installation

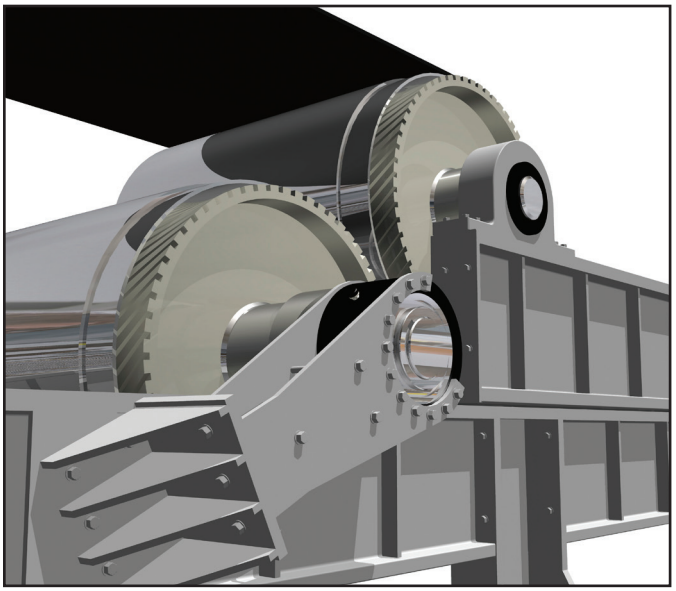

BACKSTOP CAM CLUTCH MOUNTING ORIENTATION

Preventing reverse rotation of inclined and vertical conveyor systems is one of the most common application solutions provided when implementing a backstop Cam Clutch. The following table identifies the three standard mounting types and the given series associated with each mounting type. Please reference ***Figure 9*** for a depiction of the mounting styles.

	Mounting Location Designator	Mounting Position	Common Application	Overrunning Speed (RPM) Reverse Torque	Typical Series
Backstopping	A	Pulley Shaft	Backstopping for low speed overrunning	0 - 150 RPM High Reversing Torque	BS/BS-F/BSEU
	B	Intermediate Shaft - Gear Reduction Systems	Backstopping for medium speed overrunning	150 to 700 RPM Medium Reversing Torque	MGUS/MGUS-R
	C	Directly connected to motor shaft	Backstopping for high speed overrunning	700 to 3,600 RPM Low Reversing Torque	BR-HT/BREU/BRUS

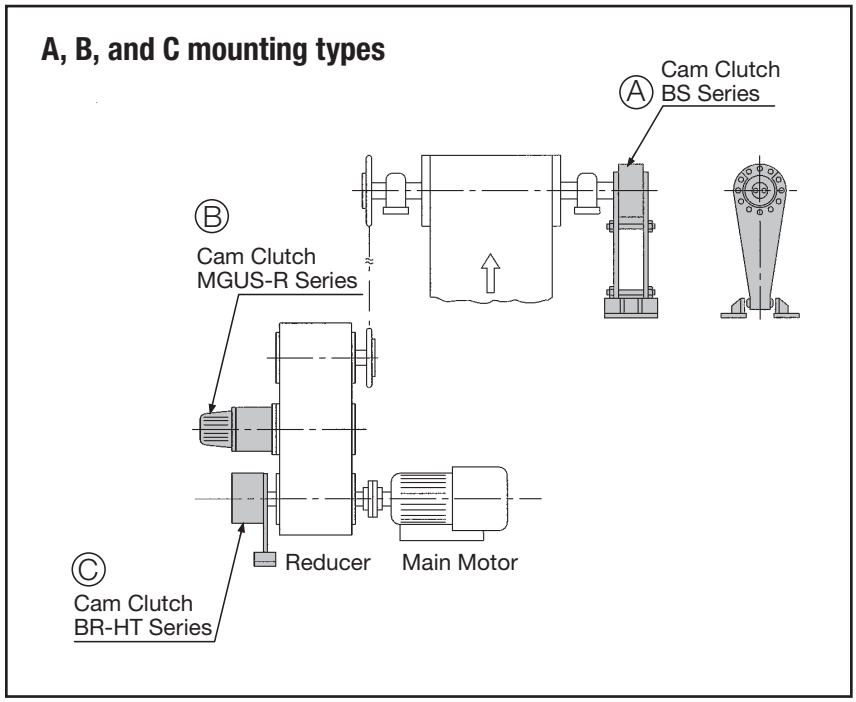

Figure 9: A,B,C backstop mounting

Backstop Clutch Selection Guide

BACKSTOPPING FOR LOW SPEED OVERRUNNING (OVERRUNNING AT 150 RPM OR LESS)

In this application, the inner race is mounted directly onto the conveyor head pulley, or driven shaft. The outer race is connected to the conveyor frame to prevent reverse rotation. Since reverse rotation is prevented directly by the conveyor shaft without using a drive chain, gears, or couplings, this is regarded as the safest and most reliable mounting method. Furthermore, due to the fact that the Cam Clutch is connected to the conveyor pulley, low overrunning slip speed is reduced, as well as the slipping distance. The result is reduced wear and long service life. In addition to conveyor systems, this system is also used to prevent reverse rotation on inclined and screw type pumps. Please see ***Figure 10*** for an illustration of mounting.

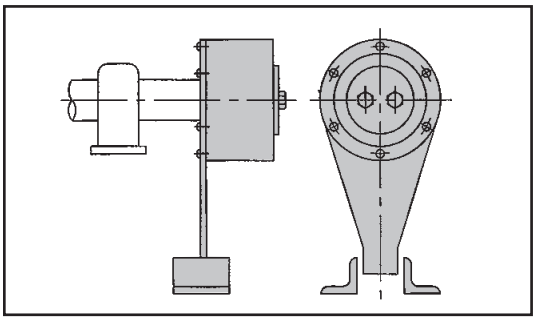

Figure 10: BS Series mounting low speed

Typical Series	Advantages
BS/BS-F/BSEU	• Designed specifically for conveyor applications • Dust-proof enclosure • Virtually maintenance-free

BACKSTOPPING FOR MEDIUM SPEED OVERRUNNING (150 TO 700 RPM)

In this application, the Cam Clutch is mounted on a gear reducer shaft rotating at medium speeds to prevent reverse rotation. As speed increases, the torque required to maintain the load at a given rate decreases. Therefore, the Cam Clutch required only needs to withstand a comparatively small torque that is inversely proportional to the rotating speed ratio of the reducer output shaft. Considering the application requirements, even a small Cam Clutch can be utilized in this application. ***Figure 11*** provides an illustration of how the Cam Clutch could be mounted for this particular application.

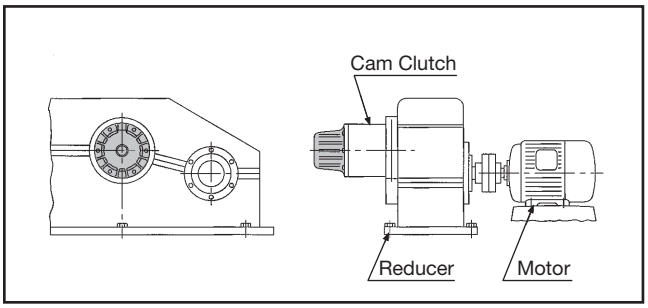

Figure 11: MGUS Series mounting medium speed

Typical Series	Advantages
MGUS/MGUS-R	• Compact design can handle high torque • Excellent wear characteristics

BACKSTOPPING FOR HIGH SPEED OVERRUNNING (OVERRUNNING AT 700 TO 3,600 RPM)

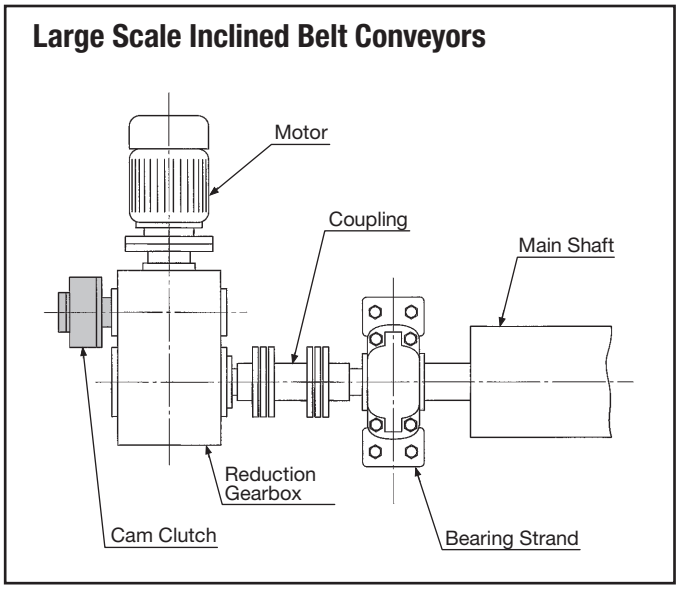

Figure 12: Cam Clutch installed on gear reducer

Inclined Belt Conveyors

In this application, the gear reducer is tasked with driving a large scale inclined conveyor system. The Cam Clutch is installed to prevent the conveyor from rolling backwards in the event of stoppage or overload. As depicted in ***Figure 12***, the Cam Clutch is mounted directly onto the reducer to prevent damage that would result due to reverse rotation.

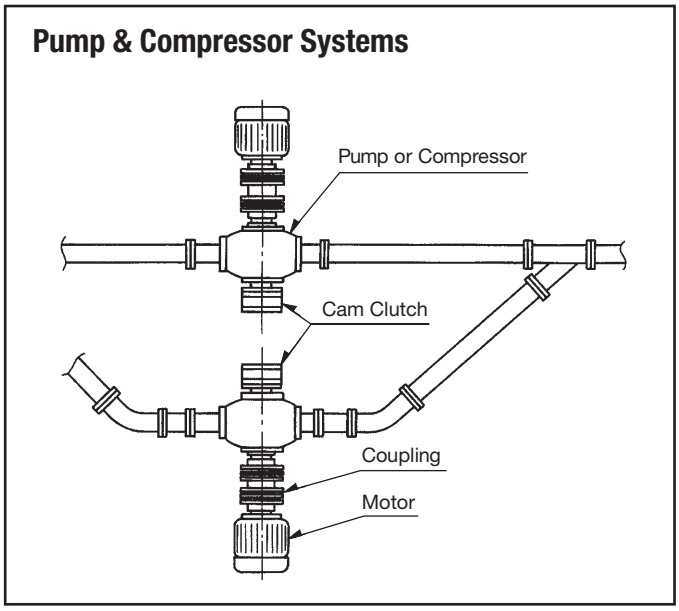

Figure 13: Cam Clutch installed on pump/compressor system

Pump/Compressor Systems

There are many applications in which multiple pump or compressor systems are feeding into the same line. These are common in applications where energy savings is required, or emergency backup/redundancy is highly desired. When the system is shut down, or another pump comes on line, there may be a tendency for a given pump to back-spin when not running. Allowing this to happen may result in damaging the pump or compressor. Installing a backstopping Cam Clutch can prevent this. Please reference ***Figure 13*** for an illustration example.

Backstop Clutch Selection Guide

INFORMATION FOR SELECTION

BACKSTOP SELECTION

Backstop clutches by definition are required to hold back a load from moving in a reverse direction. Care must be taken in calculating the torque requirements and should be based on maximum or worst case conditions and not averages or normally seen loads. Because the failure of a backstop or holdback clutch might result in damages, take time in considering all the possible loadings and select appropriate service factors. Below is more than one selection formula; it is generally advised to select the Cam Clutch that provides the largest safety factor.

General Selection Method:

A) Calculate the static torque reverse motion based upon the maximum load expected and multiply it by the service factor.
Selection is based on the formula to the right.

B) Select the clutch by:
1) Design torque requirement
2) Maximum overrunning speed
3) Bore size and installation method

Required Torque x Service Factor = Design Torque

The torque capacity of the selected Cam Clutch must be greater than the design torque requirement, must accept the maximum overrunning speed, and be suitable for the bore and installation method required.

Motor Stall Torque Selection Method:

Another method commonly used to select the proper backstop clutch size for conveyors is to use the motor name plate ratings plus the motor's ability to produce excess torque. Depending on the motor size, it may develop over 300% of rated torque. After stalling an overloaded conveyor can overload the backstop. For proper selection of the backstop, all facets of the mechanical system should be considered to ensure that the backstop is not the weakest link in the conveyor drive. If the motor breakdown torque is not known, refer to the motor manufacturer.

Selection is based on the following formula:

$$\text{Motor stall torque T(lb.ft.)} = \frac{\text{Motor power hp x 5250}}{\text{Shaft speed N (r/min)}} \times S \leq T_{max}$$

or

$$\text{Motor stall torque T(N•m)} = \frac{\text{Motor power kW x 9550}}{\text{Shaft speed N (r/min)}} \times S \leq T_{max}$$

S = Service Factor

T_{max} = Torque capacity of the Cam Clutch and must be greater than the motor stall torque

Select service factor from table below:

% of Normal motor rating	Service factor
175%	1.30
200%	1.30
250%	1.67
300%	2.00

NOTE
Always allow for the maximum possible load in your calculations, since backstopping often occurs when the conveyor is loaded above its normal loading capacity.

Bucket Elevator Selection Method:

The torque capacity of the selected Cam Clutch must be greater than the calculated torque (T), must accept the required shaft speed, and be suitable for the bore and installation method required.

Metric formula:

$$T(Nm) = \frac{9.8 \times (L + D) \times Q \times 1000}{120 \times V} \times \text{Service Factor}$$

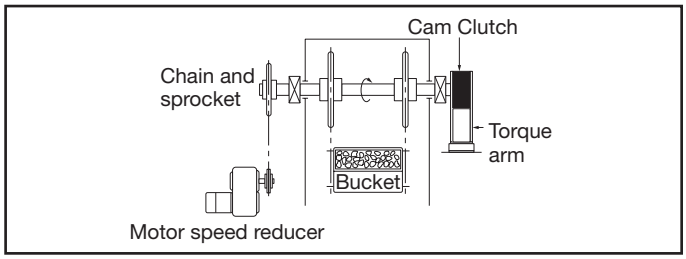

L = Total lift in meters
D = Pitch diameter of head sprocket in meters
Q = Maximum possible load in tons per hours (1 ton = 1000 kg)
V = Velocity of conveyor in meter/minute
SF = Service Factor from Table on page 16

Belt Conveyor Selection Method:

Using these calculations, a slightly smaller Cam Clutch might be suggested because friction factors inherent in the belt conveyor are taken into consideration. Any calculations from this formula should be compared with the Motor Stall Torque Selection Method. We strongly suggest that any Cam Clutch selection be based on the larger value and choose the Cam Clutch that provides a greater safety factor. Please contact Tsubaki with any questions.

Selection Procedure:

(1) Calculate the power to move an empty belt and idlers: (P1)

$$P_1 = 0.06 \times f \times W \times V \times \frac{\ell + \ell_0}{367} \text{ (kW)}$$

(2) Calculate the power to move a loaded belt horizontally: (P2)

$$P_2 = f \times Qt \times \frac{\ell + \ell_0}{367} \text{ (kW)}$$

(3) Calculate the power to move the load vertically: (P3)

$$P_3 = \frac{h \times Qt}{367} \text{ (kW)}$$

(4) Calculate the backstop power: (Pr)

$$Pr = P_3 - 0.7(P_1 + P_2) \text{ (kW)}$$

(5) Calculate the backstop torque: (T)

$$T = \frac{9550 \times Pr}{N} \times SF \text{ (N m)}$$

(6) Select the proper clutch which satisfies the calculated backstop torque (T)

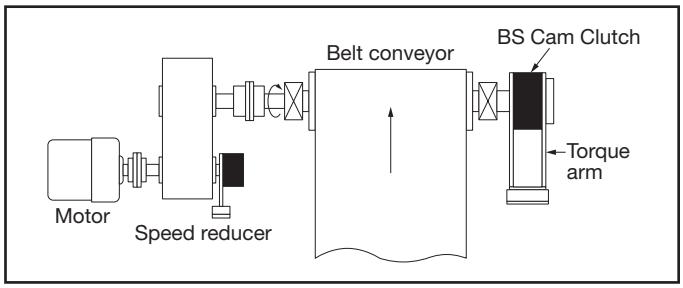

Note:
f = Friction coefficient of rollers (0.03 normally used)
h = Total lift (m)
ℓ = Horizontal distance between head pulley and tail pulley (m)
ℓ_0 = Modification coefficient for ℓ (49 m normally used)
N = Shaft speed on which the clutch is mounted – r/min
Q = Max. possible load in tons per hour (metric ton/hr.)
SF = Service factor
V = Velocity of conveyor (m/min)
W = Weight of moving parts of the conveyor in the unloaded condition (kg/m)

(W) Estimates for non-loaded belt weight (kg/m)

Width of Belt (mm)	400	450	500	600	750	900
Estimated Weight: W	22.4	28	30	35.5	53	63

Width of Belt (mm)	1050	1200	1400	1600	1800	2000
Estimated Weight: W	80	90	112	125	150	160

Indexing Clutch Selection Guide

INDEXING (INTERMITTENT FEED)

In this application, reciprocal movement of a certain angle (θ) is provided at the outer race of the Cam Clutch to alternately engage then overrun continuously so as to obtain intermittent rotation. In the case of the Cam Clutch shown in ***Figures 14, 15***, when the outer race moves from A to B, the Cam Clutch engages to rotate the inner race (of the driven side) by angle θ, i.e., from a to b. However, the Cam Clutch does not operate to stop the inner race at position b. When the outer race rotates in reverse from B to A, the Cam Clutch overruns while the inner race (of the driven side) does not rotate. By repeating this sequential movement, the inner race (of the driven side) rotates intermittently within the preset angle (θ). This angle of movement (θ) is referred to as the "feed angle" that the Cam Clutch must accommodate.

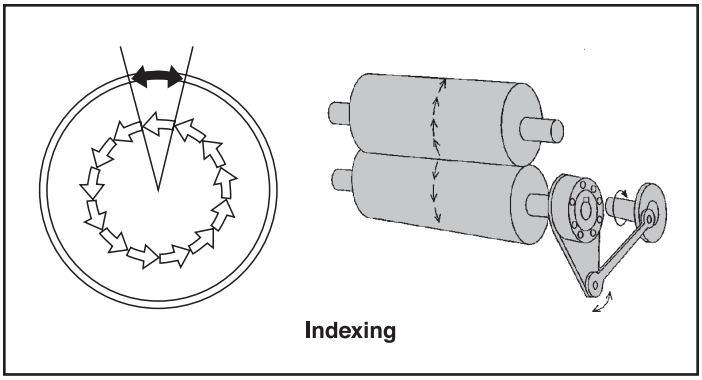

Figure 14: Typical indexing application example

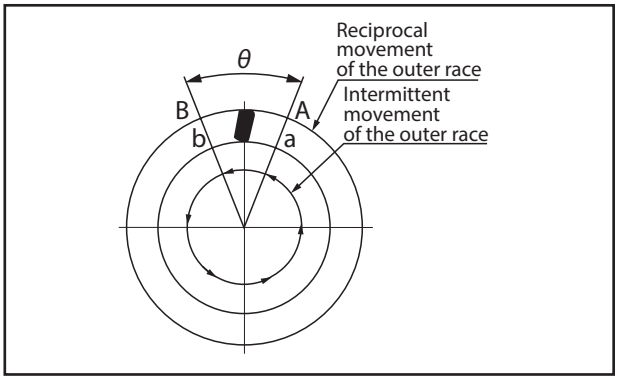

Figure 15: Cam Clutch inner and outer race interaction

Advantages of indexing mechanisms that use Cam Clutches

1. Accurate feeding without backlash.
2. Feeding distance can be simply adjusted and is stepless.
3. The indexing mechanism has low running costs.

There are six different classifications of Indexing Cam Clutch applications.

	Application		Specification
Indexing	(1)	High speed and small feed angle	Frequency (number of rotations) = 300 cycles/min. and above Feed angle (θ): Up to 90°
	(2)	Medium and low speed and small feed angle	Frequency (number of rotations) = 300 cycles/min. or less Feed angle (θ): Up to 90°
	(3)	Low-speed and large feed angle	Frequency (number of rotations) = 150 cycles/min. or less Feed angle (θ): 90° and more
	(4)	Backstopping in intermittent feeding	Frequency and feed angle are the same as those of Cam Clutches for feeding
	(5)	Feeding with stopper	Application method is the same as (2) except that material is stopped by force during feeding
	(6)	Speed change	Application method is the same as (2) except that the rotating speed adjusts steplessly by changing the feed angle (θ) during operation

(1) Indexing applications with: HIGH SPEED AND SMALL FEED ANGLE

(Feed frequency: N = 300 to 1,200 cycles/min.)
(Feed angle: θ = Up to 90°; N x θ = 20,000 max)

The example in ***Figure 16*** shows a roll feeding device which is frequently used in high-speed automatic clamp presses. Driving power is taken from the eccentric disk provided at the end of the continuously rotating crankshaft, and this power drives the feed rolls intermittently through a Cam Clutch. The feed length can be changed quickly and easily for improved work efficiency. In order to attain high-speed, high-precision feeding, a cone brake with less torque fluctuation and a Cam Clutch for backstopping are used together.

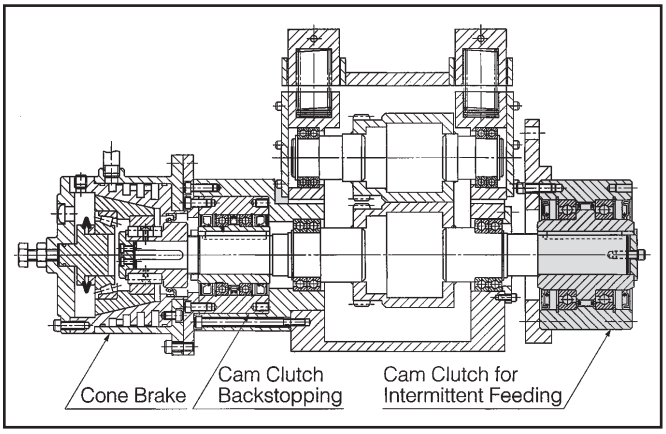

Figure 16: Common roll feeding device utilizing indexing and backstop Cam Clutch

(2) Indexing applications with: MEDIUM AND LOW SPEED AND SMALL FEED ANGLE

(Feed frequency: N = Up to 300 cycles/min.)
(Feed angle: θ = Up to 90°; N × θ = 20,000 max.)

Indexing in this application range is applicable to many machines. ***Figure 17*** shows an example of a paper feeding section on an automatic stapler. The reciprocating movement of the eccentric disk is converted by the Cam Clutch into an intermittent feed motion, which drives the belt conveyor. Hence, stapling is timed to the intermittent feeding motion and load overrun is prevented by a brake. Stapling is done at an exact pitch. This indexing can be applied extensively to food and other packaging machines.

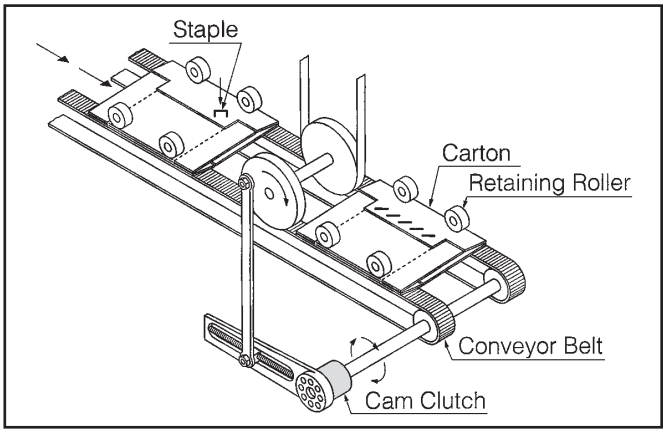

Figure 17: Automatic stapler indexing application

Typical Series	Advantage
MIUS	For medium speeds (up to 300 cycles/min.)
	Excellent follow-up response at the time of engagement
MZ, MZEU	For low speed (up to 150 cycles/min.)
	Maintenance-free
BB	For low speeds (up to 100 cycles/min.)
	Same dimensions as #62 bearing
PBUS	For low speeds (up to 150 cycles/min.)
	Sleeve-type outer race enables mounting of sprocket or gears as well as torque arms
MI-S, MIUS-E, MIUS-K	For medium speeds (up to 300 cycles/min.)
	Uses a special surface hardening cam to improve abrasion resistance
MX*	For high speeds (up to 1,200 cycles/min.)
	Applicable also to low speeds

*Contact Tsubaki for more information.

Indexing Clutch Selection Guide

(3) Indexing applications with:

LOW SPEED AND LARGE FEED ANGLE
(Feed frequency: N = Up to 150 cycles/min.)
(Feed angle: θ = 90° and up; N × θ = 50,000 max.)

Segmented gears and rack & pinions are often used to produce the reciprocal movement to be transmitted to the Cam Clutch. ***Figure 18*** gives an application example of a pouch-making machine. Since the reciprocating movement of the eccentric disk is accelerated through the rack & pinion assembly, the reciprocal action of the Cam Clutch outer race is enlarged to 860°. During production the vinyl sheet feeding length is indexed at a speed of 40 to 60 cycles per minute. In this case, the acceleration of the Cam Clutch increases, a large torque acts repeatedly, and the cam slipping distance at overrunning becomes longer. Hence, a cam is required that has superior engagement and higher anti-abrasive properties. A brake is used in order to improve the precision of the vinyl sheet feeding pitch.

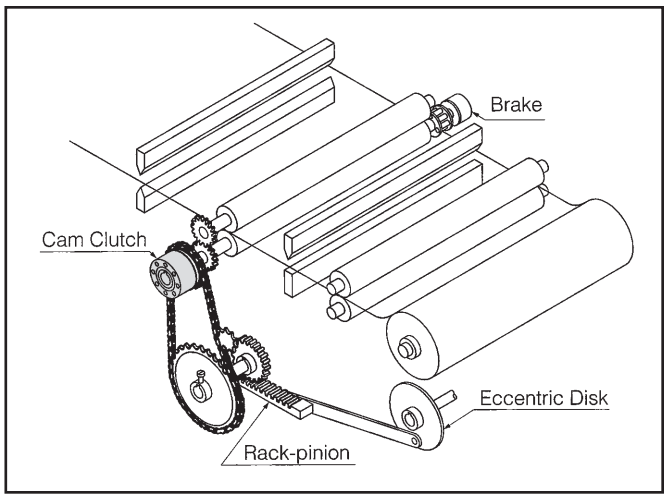

Figure 18: Indexing Cam Clutch used in feed roll application

Typical Series	Advantage
MI-S*	The MI-S Series has been developed exclusively for these applications
	Special cam surface hardening treatment improves the abrasion wear
	The shape and structure of the cam are specially designed so that it can handle abrupt speed changes (e.g. great acceleration) when engaging

*Contact Tsubaki for more information.

(4) Indexing applications with:
FEEDING WITH STOPPER
(Feed frequency: N = Up to 300 cycles/min.)
(Feed angle: θ = up to 90°)

In this application, a stopper holds the material to be indexed at a position just before the feed end point, providing a fixed feeding pitch. As soon as the material hits the stopper, a torque shock load larger than the torque required for feeding is applied to the feeding roll which is still rotating. ***Figure 19*** below shows an example of a Cam Clutch used in a bolt header. The wire is fed intermittently by a Cam Clutch mounted on a grooved feed roll. Since the feed length of the wire is set longer than necessary, the fed wire hits the stopper which has been set at a position where the wire is fed to the necessary length. The reactive force this generates acts as a vibrating shock load upon the Cam Clutch. It is therefore necessary to consider this when selecting a Cam Clutch.

(5) Indexing applications with:
SPEED CHANGE
(Feed frequency: N = Up to 300 cycles/min.)
(Feed angle: θ = Up to 90°; N × θ = 20,000 max.)

In an intermittent feed mechanism that uses one or more Cam Clutches, the speed of the driven side is changed steplessly by changing the feed angle. ***Figure 20*** below shows an example of a manure spreader. The amount of manure to be sprinkled varies depending on the field conditions.
The chain conveyor is driven by an intermittent Cam Clutch feeding action and the manure loaded on the cart is fed in bits to the continuously rotating sprinkling vanes. The manure to be sprinkled can thus be kept at the optimum amount by adjusting the amount of manure to be fed.
The feed amount (or angle of the Cam Clutch) can be controlled steplessly while the sprinkler is operating.

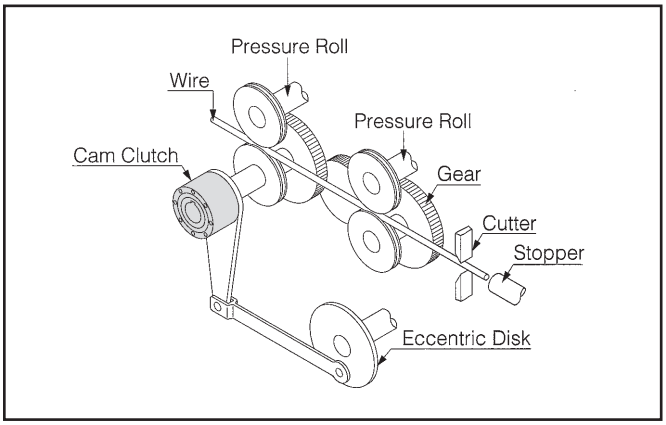

Figure 19: Bolt header application utilizing indexing Cam Clutch

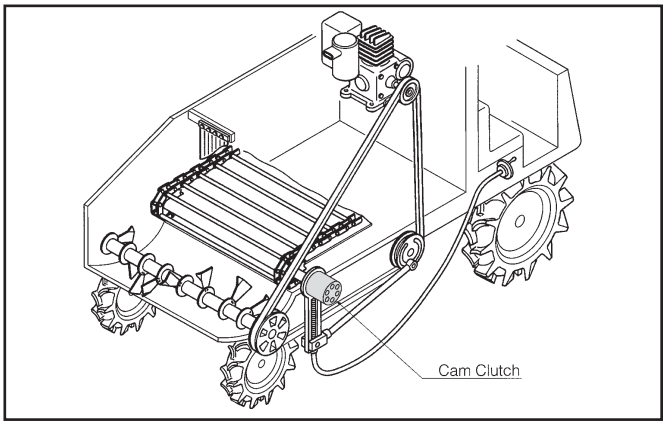

Figure 20: Manure Spreader

Typical Series	Advantage
MIUS	For medium speeds (Up to 300 cycles/min.)
MZEU, PBUS	For low speeds (Up to 150 cycles/min.)
BB	For low speeds (Up to 100 cycles/min.)

* Chart is for application (5) above only.

Indexing Clutch Selection Guide

INDEXING SELECTION

When detailed load conditions can be calculated, apply formula A, and when not, apply formula B and then compare with the allowable torque of the Cam Clutch. Please reference ***Figure 21*** for critical dimensions associated with Formula B. Please contact Tsubaki with questions or for assistance.

Selection Procedure:

a) Determine the design torque requirement
b) Identify the maximum indexing cycles (N) per minute
c) Specify the feeding angle θ
    $\theta \geq 90^\circ$ consider MI-S Cam Clutch model (contact Tsubaki)
    $\theta < 90^\circ$ consider other series Cam Clutch
d) Calculate the number of cycles per minute times the feed angle ($N \times \theta$)
  $N \times \theta \leq 20{,}000$ look at these Cam Clutches - MZ, MZEU, PBUS, BUS200, MIUS
  $N \times \theta \leq 50{,}000$ consider MI-S Cam Clutch model (contact Tsubaki)
  $N \times \theta > 50{,}000$ please contact Tsubaki
e) Identify the required bore size and installation method

Formula A:

$$T = \frac{J \cdot \theta \cdot N^2}{10380} + T_B$$

T: Loaded torque on Cam Clutch (Nm)
J: Inertia of load ($kgf \cdot m^2$) on Cam Clutch shaft
θ: Feeding angle (deg) on Cam Clutch shaft
N: Indexing cycles per minute (c/min)
T_B: Brake torque calculated on Cam Clutch shaft (Nm)

Formula B:

$$T = \frac{9550 \cdot kW}{n} \cdot \frac{\ell_2}{\ell_1} \times 2.5$$

T: Loaded torque on Cam Clutch (Nm)
kW: Transmitted power (kW)
n: Speed of crank shaft (r/min)
ℓ_1: Length of crank
ℓ_2: Length of lever on Cam Clutch
2.5: Factor

Conversion factors for above calculations
1 Nm = 0.73756 lb.ft.
1 lb·ft. = 1.356 Nm
1 $kg \cdot m^2$ = 23.73036 $lb \cdot ft^2$
1 $lb \cdot ft^2$ = 0.04214 $kg \cdot m^2$
1 kW = 1.34 hp
1 hp = 0.75 kw

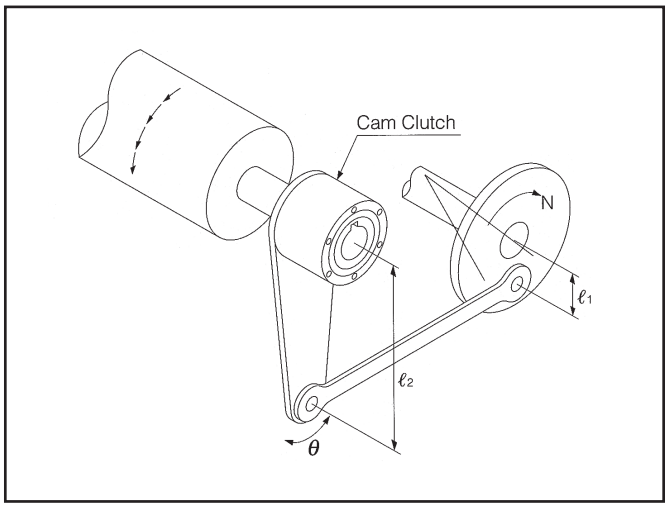

Figure 21: Critical dimensions for indexing applications

Overrunning Clutch Selection Guide

OVERRUNNING: DUAL DRIVE AND TWO SPEED DRIVE

Dual Drive is a system that utilizes two sets of driving units to propel a driven unit. Dual drive systems often have two drives that rotate at different speeds; these are referred to as two speed drive systems. In a two speed drive system, it is common to operate at two different speeds; high speed and low speed. Normally, each drive system utilizes a Cam Clutch that acts as an automatic switching device. In ***Figure 22***, when the driven unit is propelled by Driving Unit A (in the direction of the arrow), Cam Clutch A engages to transmit torque from the outer race to the inner race, resulting in rotation at a pre-set speed. At the same time, since the inner race of Cam Clutch B is also rotating in the same direction, it does not engage but overruns. The end result is Driving Unit B is disconnected from the Driven Unit. Conversely, when the Driven Unit is to be propelled by Driving Unit B, Cam Clutch B engages to transmit torque of the outer race to the inner race, resulting in rotation of the Driven Unit at a pre-set speed. At this time, Cam Clutch A overruns to disconnect Driving Unit A.

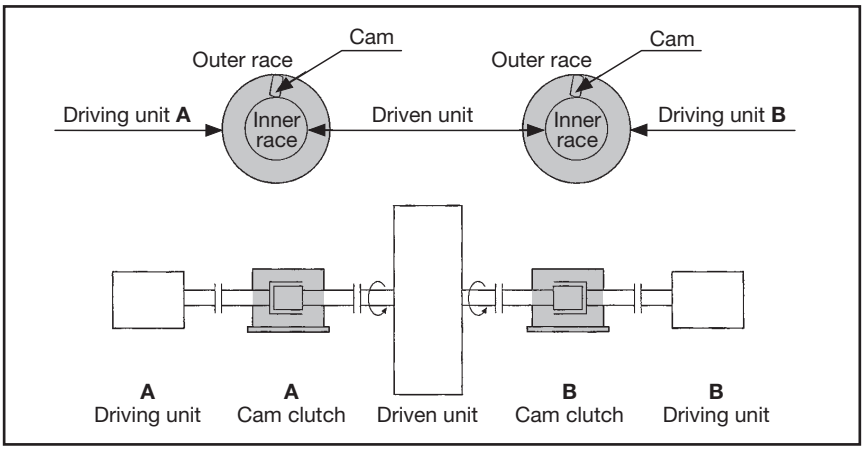

Figure 22: Dual Speed Drive System with Overrunning Cam Clutch

Overrunning Cam Clutch applications are divided into four types as depicted below. When selecting an overrunning Cam Clutch, one must consider the overrunning speed and engaging speed.

Application	Overrunning Speed	Engaging Speed	Applicable Series
High-speed overrunning and high-speed engagement	700 RPM and up	700 RPM and up	Cam Clutch Box MZEU, MZ Series
High-speed overrunning and medium or low-speed engagement	700 RPM and up	up to 700 RPM	Cam Clutch Box MZEU, MZ Series
High-speed overrunning and low-speed engagement	700 RPM and up	Up to 200 RPM	Cam Clutch Box BREU, BR-HT MZEU, MZ Series
Medium and low-speed overrunning and medium and low-speed engagement	up to 700 RPM	up to 700 RPM	MZEU, MZ Series MGUS Series PBUS, BUS200

OVERRUNNING: DUAL DRIVE AND TWO SPEED DRIVE

High-Speed Overruning and High-Speed Engagement:
(Overruning speed = 700 RPM and up)
(Engaging speed = 700 RPM and up)

Example of fan or pump drive

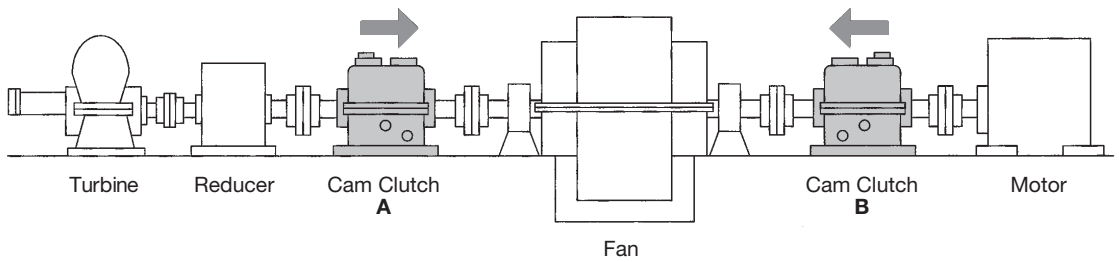

Figure 23: Typical High-Speed Overrunning Application

This example shows a high-speed system in which a fan is driven by a dual drive system consisting of a motor and a turbine. The Cam Clutches are used for automatic switching between the driving units. The fan is normally driven by the Cam Clutch on the turbine side.
When starting, or when steam pressure to the turbine drops, the motor takes over from the turbine to drive the fan. Cam Clutch A engages when the turbine drives the fan, and it overruns when the motor drives the fan. Conversely, Cam Clutch B overruns when the turbine drives the fan, and it engages when the motor drives the fan. The driving devices can be changed over without switching the clutch. This is because the difference in the speed of rotation between the motor and turbine turns the Cam Clutches on and off, and the driving device rotating the fastest is connected automatically to the fan. Overrunning and engagement of the Cam Clutches are performed continuously at speeds faster than 700 r/min.
Please reference *Figure 23*.

Example of energy saving pump (power recovery system)

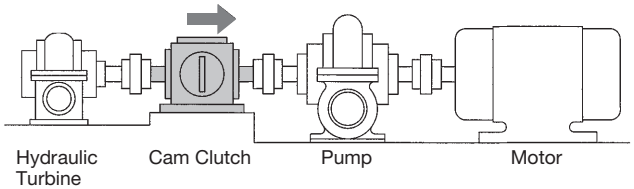

Figure 24: High-Speed Energy Saving Application

Application of Cam Clutches in an energy saving pump (power recovery system) shows how highly effective energy saving can be achieved with the aid of Cam Clutches. The motor-driven pump discharges high-pressure liquid, which, after circulating, is used to drive a turbine. The turbine is then used to help drive the pump. If the pressure available is too low to rotate the turbine at high speed, the Cam Clutch overruns. However, when the rotating speed of the turbine reaches the rotating speed of the motor, the Cam Clutch engages automatically and the pump is driven by both the turbine, and the motor. Thus, power consumption equivalent to the turbine output can be saved. Since energy loss during overrunning and engagement of the Cam Clutch is extremely small, this system produces results for pumps with an output as low as 10 hp (7.5 kW). Setup requires only installation of a Cam Clutch and a turbine, providing a high efficiency energy recovery system with low running costs.
Please reference *Figure 24*.

OVERRUNNING: DUAL DRIVE AND TWO SPEED DRIVE

High-Speed Overrunning and Medium and Low-Speed Engagement:
(Overrunning speed = 700 RPM and up)
(Engaging speed = up to 700 RPM)

The Cam Clutch works as a switching device for two driving units (high-speed or medium/low-speed). When driving a fan, cement kiln or conveyor in normal operation, the driving speed is switched to high speed. When using them for other purposes, the driving speed is switched to medium or low speed.

Figure 25 shows a soak pit fan used for melting aluminum and steel ingots, with a Cam Clutch being used for energy savings. The heating is done in two stages, one being quick heating and the other being constant heating. Switching is done automatically by a driving system. For quick heating, the fan is driven by the main motor at high speed (the Cam Clutch is overrunning at this time). For constant heating, the fan only rotates at low speed and is driven by a geared motor (the Cam Clutch engages and the main motor and fan rotate simultaneously).

Example of energy saving drive for a soaking pit fan

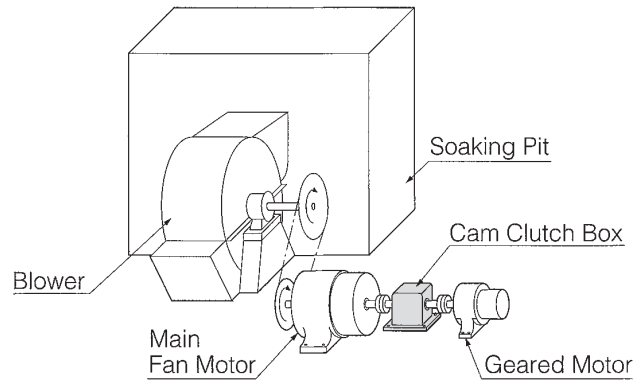

Figure 25: Energy savings realized with OB-ON series

Compared to pole change motor or inverter systems, substantial equipment cost savings can be achieved and the initial equipment costs can be recovered very quickly. Typically equipment costs are recovered within one year of continuous running. This system is effective for fans from the 20 hp (15 kW) class and up.

Typical Series	Advantage
Cam Clutch Box	Can withstand extended continuous running
	Various lubricating and cooling systems can be used
	Minimal lubrication maintenance required
MZEU	Grease is sealed in, lubrication maintenance is not required

Overrunning Clutch Selection Guide

OVERRUNNING: DUAL DRIVE AND TWO SPEED DRIVE

High-Speed Overruning and Low-Speed Engagement:
(Overruning speed = 700 RPM and up)
(Engaging speed = up to 200 RPM)

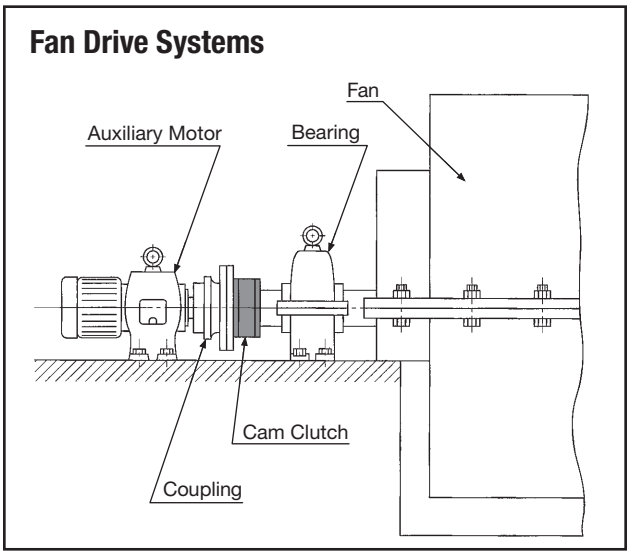

Figure 26: High-Speed/Low Engagement Energy Saving Application

Smoke ventilation and gas mixing fans operate in high temperature environments. In order to prevent excessive thermal transfer from distorting the fan shaft, an auxiliary drive system is used to keep the fans rotating slowly when the main motor shuts down. Using a Cam Clutch at the auxiliary motor eliminates the need for manual clutch operation. Thermal expansion in the fan shaft must be absorbed through an expandable coupling. During main motor operation, the Cam Clutch rotates as a normal bearing, so service life is greatly extended. Please reference ***Figure 26***.

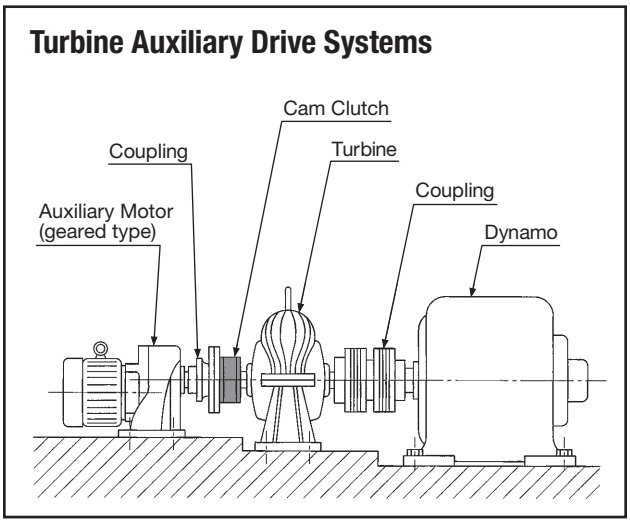

Figure 27: High-Speed/Low Engagement Energy Saving Application

This example shows a Cam Clutch installed in the auxiliary drive system of a steam turbine. The auxiliary drive system powers the turbine at low speed through the engaged Cam Clutch until steam pressure accelerates the turbine, releasing the Cam Clutch. Then the cam automatically disengages and runs as a high-speed ball bearing, because there is no mechanical contact in the clutch. Please reference ***Figure 27***.

Typical Series	Advantage
Cam Clutch Box	Can withstand extended continuous running
	Minimal lubrication maintenance required
BR-HT, BREU	The cam is the inner race overrunning type that lifts off
MZ, MZEU	Grease is sealed in, so lubrication maintenance is not required

OVERRUNNING: DUAL DRIVE AND TWO SPEED DRIVE

Medium and Low-Speed Overrunning and Medium and Low-Speed Engagement:
(Overrunning speed = 700 RPM and up)
(Engaging speed = up to 700 RPM)

In this application, one driven unit is driven at two speeds by a medium and a low-speed drive unit, both at speeds lower than 700 r/min. Two Cam Clutches enable automatic switching between the drive units.

Figure 28 shows an example of Cam Clutches being used with the pasting rolls of a corrugating machine for making cardboard. The pasting rolls are driven continuously by the main motor. During this time, Cam Clutch A engages and Cam Clutch B overruns. When the main motor must be stopped temporarily to fix a problem, it is necessary to keep rotating the pasting rolls in order to prevent paste on the roll surface from drying. To do this, the rolls are driven by an auxiliary motor at a low speed sufficient to prevent the paste from drying (Cam Clutch A overruns, while B engages). This system is also used with meat choppers and screw feeds in food processing machinery.

Example of pasting roll drive

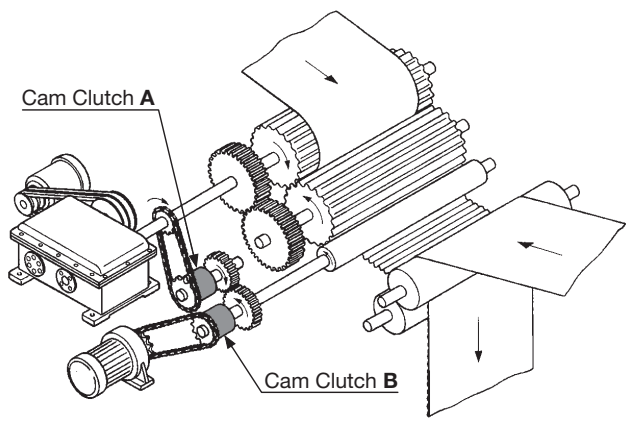

Figure 28: Two speed drive – Medium Overrunning and engagement

Typical Series	Advantage
BB	Same dimensions as the #62 type bearing
	Integrated Cam Clutch and bearing
MGUS	Compact and transmits high torque
	Excellent wear resistance when overrunning
MZ, MZEU	Grease is sealed in, lubrication maintenance is not required
TFS	Outside dimensions are the same as #63 type bearing
TSS	Outside dimensions are the same as #62 type bearing
	Compact designs are possible

Overrunning Clutch Selection Guide

FREEWHEELING

To prevent differences in the rotating speed between the driving side and the driven side from damaging the equipment or the product, the Cam Clutch overruns when speed differences occur. Normally, the Cam Clutch engages to transmit torque, and it overruns to break the connection between the driving side and the driven side. In this case the Cam Clutch overruns at a speed equal to the difference in rotating speed that occurs when the driven unit (normally the inner race) rotates faster than the driving unit (normally the outer race), or when the driving unit is decelerated or stopped abruptly. When feeding hoop-shaped material or plate material to the next process by slitter or pressure rolls, the material is fed at first by pinch rolls up to the main rolls. Since the main rolls process the material while pulling it at a speed faster than that of the pinch rolls, the pinch rolls are pulled by the material. At this point, the Cam Clutch starts to overrun and prevents the pinch rolls from being driven in reverse by the material. The Cam Clutch is used to prevent damage to the pinch roll driving parts and to the material, due to slippage between the pinch rolls. This method is also used with drying machines, engine testers, and plywood fabricating machines. Please reference **Figure 29.**

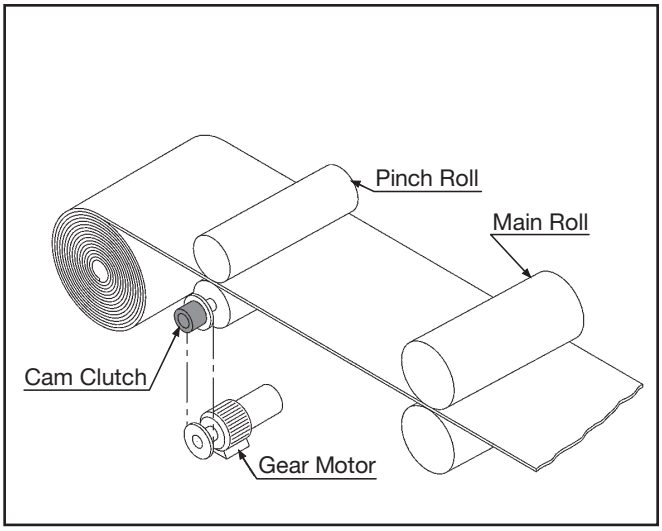

Figure 29: Feed roll – medium overrunning application

Typical Series	Advantage
MZ, MZEU	Grease is sealed in, so lubrication maintenance is not required
MGUS	Compact and transmits high torque
BB	Integrated Cam Clutch and bearing
MIUS	Excellent response to load change
TFS, TSS	Outside dimensions same as standard ball bearing type bearing
PBUS	Easy mounting of gears, pulleys, and sprockets
BUS200	With or without inner race for machine integration

MANUAL OPERATION

Cam Clutches are often used when a machine is operated manually for positioning, adjustment, or set up. The Cam Clutch mounted at the manual handle overruns while the machine is in operation. The handle does not rotate and cause a safety hazard. Cam Clutches are often used on the manual handles of circular knitting machines. The manual handle is used to position the machine on start-up and adjustment of the needle and thread. When the machine starts the linkage between the Cam Clutch and the handle is broken. Another Cam Clutch is provided at the output section of the worm reduction gears, to break the connection with the driving side during manual operation. ***Figure 30***.

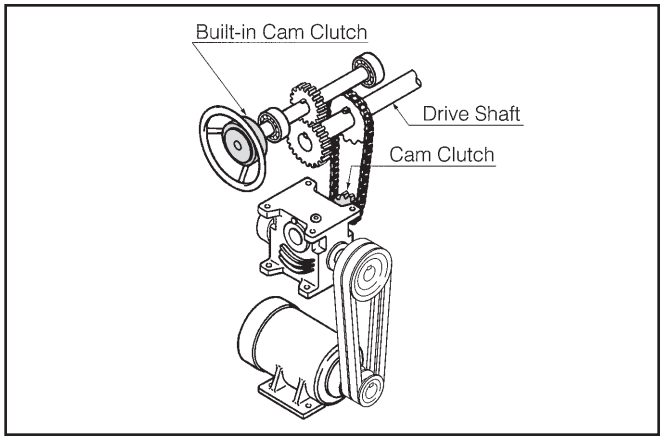

Figure 30: Common manual operation arrangement

Typical Series	Advantage
BB	Integrated Cam Clutch and bearing
BUS200	With or without inner race for machine integration
MZ, MZEU	Grease is sealed in, so lubrication maintenance is not required
PBUS	Easy mounting of gears, pulleys, and sprockets
TFS, TSS	Outside dimensions same as standard ball bearing type bearing

Overrunning Clutch Selection Guide

OVERRUNNING: NORMAL ENGAGEMENT — REVERSE OVERRUNNING

Disconnecting driver and driven elements

Cam Clutch units are often used to protect critical pump/drive equipment from being reversed upon start-up, or when overloaded. Pumps can be overloaded with stacked material on the discharge side, resulting in reverse rotation. To prevent these damaging conditions from occurring, a Cam Clutch is installed between the pump and the motor. In this application, the Cam Clutch will engage to allow normal pump operation, and overrun to prevent reverse rotation. Please reference ***Figure 31*** for a depiction.

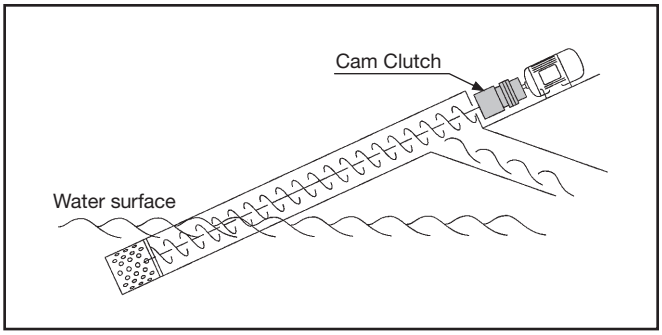

Figure 31: Inclined pump – Medium Overrunning Application

Disconnection of driven side

Figure 32 depicts an application in which the hose drum of a pipe flusher is being driven. When the hydraulic motor is rotated in reverse in the counter-clockwise direction, the Cam Clutch inner race rotates in reverse, and the Cam Clutch overruns. The flushing pump is driven in this state. The flushing water passes through the hose and gushes out of the nozzle toward the back. The force of this water jet starts the nozzle running and pulls and unwinds the hose. At the same time, the hose drum starts reverse rotation in the same counter-clockwise direction, and increases its speed of rotation until it reaches the overrunning speed of the inner race. At this point, the Cam Clutch engages, and the hydraulic motor works as a brake to stop the acceleration of the drum. Therefore, the running speed of the water jet nozzle is kept constant. When the hydraulic motor is rotated normally in the clockwise direction, the Cam Clutch engages to wind the unwound hose onto the drum.

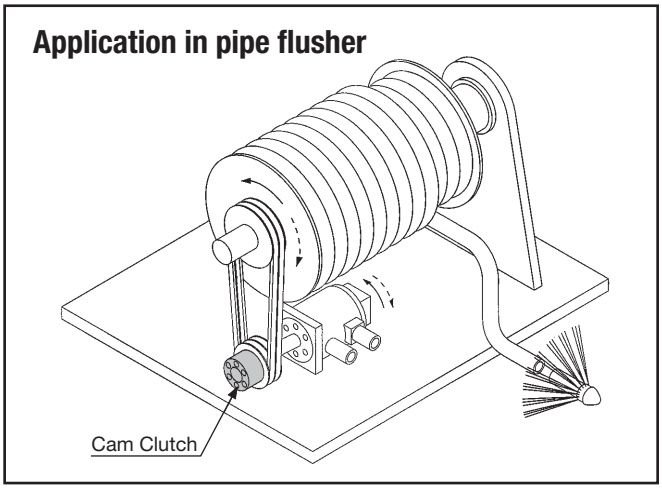

Figure 32: Pipe Flusher – Medium Overrunning Application

OVERRUNNING: SELECTIVE ENGAGEMENT

Selective driving of one or two driven units

Figure 33 depicts an application for the purpose of selectively driving either one or two driven units by normal or reverse rotation of the drive input. When the motor is rotating normally (in the counter-clockwise direction), Cam Clutch A engages to drive unit A, and Cam Clutch B overruns. Conversely, when the motor is rotated in reverse (in the clockwise direction), Cam Clutch B engages to drive driven unit B.
In this application, the two driven units must work independently.

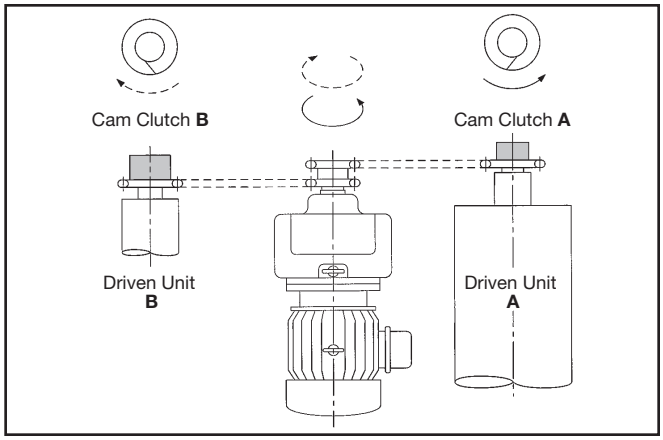

Figure 33: Selection based upon rotation direction

OVERRUNNING SELECTION

The following is the basic pattern for selecting a clutch for an overrunning application. At times it may be difficult to determine what Shock Factor (also referred to as Service Factor) to use for a given application. Please contact Tsubaki if there are any questions.

Calculate the torque on the Cam Clutch according to the formula below.

$$T = \frac{9550 \cdot kW}{N} \times SF$$

T: Loaded torque (Nm)
kW: Transmitted power (kW)
N: Speed of Cam Clutch shaft rotation (r/min)
SF: Service factor

SF = Motor peak torque at starting x shock factor, K. The shock factor K is obtained from the chart below by calculating inertia ratio. Use a shock factor of K = 1 when the inertia ratio is below 0.48.

Select clutch by:
a) Design torque requirement and service factor
b) Maximum overrunning speed
c) Bore and installation method
If the SF is not known, use the peak torque with shock factor method.

Type of Load	SF
No shock load	1 – 1.5
Moderate shock load	1.5 – 2.5
Shock load	2 – 3
Heavy shock load	4 – 6

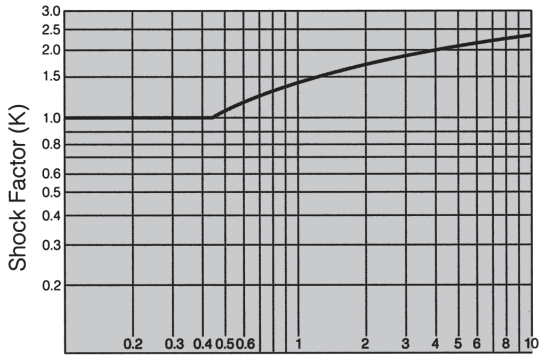

Inertia Ratio: $\frac{\text{Load inertia on clutch shaft}}{\text{Input inertia on clutch shaft}}$

MGUS SERIES CAM CLUTCH

MGUS Series Cam Clutch products are designed to satisfy inner or outer race overrunning/general application requirements. Depending on application requirements, the MGUS Series can be used in overrunning, indexing, or backstopping applications. This series is offered in both metric and inch based inner race configurations. MGUS Series units can easily be mated to pulleys, gears, or sprockets.

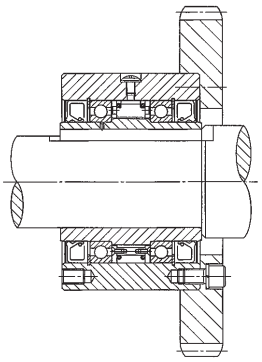

Available Bore Range

MGUS Series Cam Clutches are stocked in many bore sizes. Requested bore size and keyway combination are possible on a made-to-order basis. Chart below provides the available range of bore sizes per a given model.

Model	Range Inner Diameter inch (mm)	
MGUS300	0.500 to 0.750 inch	(12.70 to 19.05 mm)
MGUS400	0.437 to 0.866 inch	(11.10 to 22.23 mm)
MGUS500	0.750 to 1.312 inch	(19.05 to 33.32 mm)
MGUS600	0.937 to 2.000 inch	(23.80 to 50.80 mm)
MGUS700	1.875 to 2.938 inch	(47.62 to 74.61 mm)
MGUS750	2.250 to 3.437 inch	(57.15 to 87.30 mm)
MGUS800	2.625 to 4.438 inch	(66.68 to 112.71 mm)
MGUS900	3.625 to 5.438 inch	(92.08 to 138.11 mm)
MGUS1000	4.938 to 7.000 inch	(125.41 to 177.80 mm)

Example How To Order Code: MGUS Series Cam Clutch

MGUS	500	-	1B
Series	Frame Size		Bore Symbol
MGUS: For backstop and overrunning applications	300	-	H
			15
			J
			L
	400	-	H
			J
			18
			L
			P
			20
	500	-	P
			1
			1B

The bore sizes listed below are standards.
Special bore sizes are available upon request.

Specifications

Bore Size in.	Bore Size (mm)	Bore Keyseat	Torque Capacity lb.ft	Torque Capacity (Nm)
0.500	(12.70)	1/8 x 1/16"	280	(380)
0.590	(15)	5 X 2.3 mm		
0.625	(15.88)	3/16 x 3/32"		
0.750	(19.05)	3/16 x 3/32"		
0.500	(12.70)	1/8 x 1/16"	398	(539)
0.625	(15.88)	3/16 x 3/32"		
0.708	(18)	6 x 2.8 mm		
0.750	(19.05)	3/16 x 3/32"		
0.875	(22.23)	3/16 x 1/16"		
0.787	(20)	6 x 2.8 mm		
0.875	(22.23)	3/16 x 3/32"	1195	(1620)
1.000	(25.40)	1/4 x 1/8"		
1.125	(28.58)	1/4 x 1/8"		

MGUS SERIES CAM CLUTCH

Example How To Order Code: MGUS Series Cam Clutch

MGUS	600	-	1F

Series	Frame Size		Bore Symbol
MGUS: For backstop and overrunning applications	500	-	30
			1D
			1E
	600	-	1D
			1F
			1H
			40
			1J
			45
			1L
			1R
			50
			2
	700	-	1R
			50
			2
			55
			2D
			60
			2G
			2H
			65
			2L
			70
			2R
	750	-	2G
			2H
			65
			2L
			70
			2R
			75
			3
			80
			3D
	800	-	3
			80
			3D
			85

The bore sizes listed below are standards.
Special bore sizes are available upon request.

Specifications				
Bore Size			Torque Capacity	
in.	(mm)	Bore Keyseat	lb.ft	(Nm)
1.181	(30)	10 x 3.3 mm	1195	(1620)
1.250	(31.75)	1/4 x 1/8"		
1.312	(33.34)	1/4 x 3/32"		
1.250	(31.75)	1/4 x 1/8"	2316	(3140)
1.375	(34.93)	3/8 x 3/16"		
1.500	(38.10)	3/8 x 3/16"		
1.574	(40)	12 x 3.3 mm		
1.625	(41.28)	3/8 x 3/16"		
1.771	(45)	14 x 3.8 mm		
1.750	(44.45)	3/8 x 3/16"		
1.938	(49.22)	3/8 x 3/16"		
1.968	(50)	14 x 3.8 mm		
2.000	(50.80)	3/8 X 1/8"		
1.938	(30.32)	1/2 x 1/4"	5163	(7000)
1.969	(50)	14 x 3.8 mm		
2.000	(50.8)	1/2 x 1/4"		
2.165	(55)	16 x 4.3 mm		
2.250	(57.15)	1/2 x 1/4"		
2.362	(60)	18 x 4.4 mm		
2.438	(61.92)	5/8 X 5/16"		
2.500	(63.50)	5/8 X 5/16"		
2.559	(65)	18 x 4.4 mm		
2.750	(69.85)	5/8 X 7/32"		
2.755	(70)	20 x 4.9 mm		
2.938	(74.62)	5/8 X 1/8"		
2.438	(61.92)	5/8 X 5/16"	7007	(9500)
2.500	(63.50)	5/8 X 5/16"		
2.559	(65)	18 x 4.4 mm		
2.750	(69.85)	5/8 X 5/16"		
2.755	(70)	20 x 4.9 mm		
2.938	(74.62)	3/4 X 3/8"		
2.952	(75)	20 x 4.9 mm		
3.000	(76.20)	3/4 X 3/8"		
3.149	(80)	22 x 5.4 mm		
3.250	(82.55)	3/4 X 1/4"		
3.000"	(76.20)	3/4 X 3/8"	13276	(18000)
3.149	(80)	22 x 5.4 mm		
3.250	(82.55)	3/4 X 3/8"		
3.346	(85)	22 x 5.4 mm		

MGUS SERIES CAM CLUTCH

Example How To Order Code: MGUS Series Cam Clutch

MGUS	800	-	3G

Series	Frame Size		Bore Symbol
MGUS: For backstop and overrunning applications	800	-	3G
			3H
			90
			3L
			100
			3R
			4
			4D
			110
			4G
	900	-	100
			4
			4D
			110
			4G
			4H
			120
			4L
			4R
			5
			130
			5D
			135
			5G
	1000	-	4R
			5
			130
			5D
			5G
			5H
			5L
			150
			5R
			6
			6D
			160
			6G
			6J
			6L
			6P
			175
			7

The bore sizes listed below are standards.
Special bore sizes are available upon request.

Specifications

Bore Size			Torque Capacity	
in.	(mm)	Bore Keyseat	lb.ft	(Nm)
3.438	(87.32)	7/8 X 7/16"	13276	(18000)
3.500	(88.90)	7/8 X 7/16"		
3.543	(90)	22 x 5.4 mm		
3.750	(95.25)	7/8 X 7/16"		
3.937	(100)	28 x 6.4 mm		
3.938	(100.01)	1 X 1/2"		
4.000"	(101.6)	1 X 1/2"		
4.250	(107.95)	1 X 3/8"		
4.330	(110)	28 x 6.4 mm		
4.438	(112.71)	1 X 1/4"		
3.937	(100)	28 x 6.4 mm	18070	(24500)
4.000	(101.6)	1 X 1/2"		
4.250	(107.95)	1 X 1/2"		
4.330	(110)	28 x 6.4 mm		
4.438	(112.71)	1 X 1/2"		
4.500	(114.30)	1 X 1/2"		
4.724	(120)	32 x 7.4 mm		
4.750	(120.65)	1 X 1/2"		
4.938	(125.41)	1 X 3/8"		
5.000	(127.00)	1 X 3/8"		
5.118	(300)	32 x 7.4 mm		
5.250	(133.35)	1 X 1/4"		
5.314	(135)	32 x 7.4 mm		
5.438	(138.11)	1 X 1/4"		
4.938	(125.41)	1-1/4 X 5/8"	27290	(37000)
5.000	(127.00)	1-1/4 X 5/8"		
5.118	(130)	36 x 8.4 mm		
5.250	(133.35)	1-1/4 X 5/8"		
5.438	(138.11)	1-1/4 X 5/8"		
5.500	(139.70)	1-1/4 X 5/8"		
5.750	(146.05)	1-1/4 X 7/16"		
5.906	(150)	36 x 8.4 mm		
5.938	(150.81)	1-1/4 X 7/16"		
6.000	(152.40)	1-1/4 X 5/8"		
6.250	(158.75)	1-1/2 X 1/2"		
6.299	(160)	38 x 10		
6.438	(163.51)	1-1/4 X 3/8"		
6.625	(168.28)	1-1/2 X 1/2"		
6.750	(171.45)	1-1/2 X 1/2"		
6.875	(174.63)	1-1/2 X 1/2"		
6.889	(175)	45 x 10.4 mm		
7.000	(177.80)	1-1/2 X 7/16"		

MGUS SERIES CAM CLUTCH

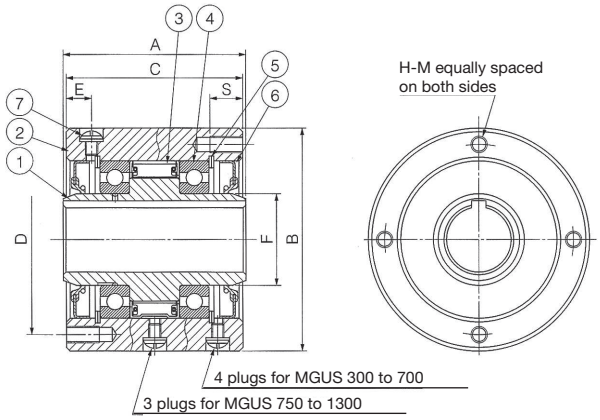

1 Inner race
2 Outer race
3 Cam cage assembly
4 Bearing
5 Spirolox
6 Oil seal
7 Lubrication filler plug

Additional information including shaft and bore tolerances are found in the Engineering section starting on page 92.

Dimensions and Capacities

Model	Max. Overrunning (RPM) Inner Race	Max. Overrunning (RPM) Outer Race	Drag Torque lb.ft. (Nm)	A in. (mm)	B in. (mm)	C in. (mm)	D PCD in. (mm)	E in. (mm)	F in. (mm)	S in. (mm)	H-M No. of Tapped Holes (Qt.) Thread	Oil Filler Plug Size × Pitch	Oil oz. (mℓ)	Weight lb. (kg)
MGUS300	2800	900	0.17	2.500	3.000/2.998	2.380	2.625	0.409	1.122	0.512	(4) 1/4-28	M6 x P1.0	0.9	4.0
			(0.23)	(63.5)	(76.2/76.15)	(60.45)	(66.67)	(10.4)	(28.5)	(13)			(25)	(1.8)
MGUS400	2600	800	0.21	2.750	3.500/3.498	2.690	2.875	0.421	1.248	0.630	(4) 5/16-24	M6 x P1.0	1.0	6.0
			(0.29)	(69.85)	(88.90/88.85)	(68.33)	(73.03)	(10.7)	(31.7)	(16)			(30)	(2.7)
MGUS500	2400	800	0.38	3.500	4.250/4.248	3.375	3.625	0.484	1.748	0.630	(4) 5/16-24	M6 x P1.0	1.7	11.0
			(0.51)	(88.9)	(107.95/107.90)	(85.725)	(92.08)	(12.3)	(44.4)	(16)			(50)	(5)
MGUS600	2100	700	0.63	3.750	5.375/5.373	3.630	4.750	0.503	2.748	0.630	(6) 5/16-24	M6 x P1.0	2.7	19.0
			(0.85)	(95.25)	(136.53/136.48)	(92.20)	(120.65)	(12.8)	(69.8)	(16)			(80)	(8.6)
MGUS700	1500	500	1.25	5.000	7.125/7.123	4.880	6.250	0.780	3.996	0.787	(8) 3/8-24	M6 x P1.0	4.6	43.0
			(1.7)	(127)	(180.98/180.93)	(123.95)	(158.75)	(19.8)	(101.5)	(20)			(135)	(19.5)
MGUS750*	1800	600	2.53	6.000	8.750/8.748	5.880	7.000	2.940	4.330	0.984	(8) 1/2-20	M8 x P1.25	13.6	81.6
			(3.43)	(152.4)	(222.25/222.20)	(149.35)	(177.8)	(74.67)	(110)	(25)			(400)	(37)
MGUS800*	1300	475	3.98	6.000	10.000/9.998	5.880	8.940	2.940	5.512	0.984	(8) 1/2-20	M8 x P1.25	17.0	103
			(5.39)	(152.4)	(254.00/253.95)	(149.35)	(227.08)	(74.67)	(140)	(25)			(500)	(46.5)
MGUS900*	1200	400	4.99	6.380	12.000/11.997	6.250	9.750	3.125	6.693	1.260	(10) 5/8-18	M8 x P1.25	21.1	155
			(6.77)	(162.052)	(304.80/304.72)	(158.75)	(247.65)	(79.38)	(170)	(32)			(620)	(70.5)
MGUS1000*	1200	325	6.00	6.630	15.000/14.997	6.500	11.750	3.250	7.874	1.260	(12) 5/8-18	M8 x P1.25	28.9	239
			(8.14)	(168.402)	(381.00/380.92)	(165.10)	(298.45)	(82.55)	(200)	(32)			(850)	(108.5)

* When placing an order for MGUS Series Cam Clutch model MGUS750 and above, please inform Tsubaki of the overrunning speed you use.

MGUS-R SERIES CAM CLUTCH

In backstop applications where the Cam Clutch is used with continuous inner race and mid-speed overrunning, the MGUS Series Cam Clutch can be fitted with an oil reservoir creating the MGUS-R Series. The added capacity of the oil reservoir plus the integral cooling fins increases the time between service intervals, permitting the free flow of oil between the reservoir and the clutch. A clear sight gauge built into the reservoir allows real-time checking of the fluid level and the general condition of the lubrication oil.

MGUS-R Series Cam Clutch ordering procedure:

Start with the standard MGUS Series model name as shown on the preceding pages and at the end of the model name, add the "-R" and left or right hand rotation as illustrated below. Only a partial example is shown below however, the "-R" reservoir can be added to all MGUS Cam Clutches in all available bore sizes.

Example How To Order Code: MGUS-R Series Cam Clutch

MGUS	500	-	1B	-R	-LH
Series	Frame Size		Bore Symbol	Reservoir	
MGUS: Indexing with inner and outer race overrunning	300	-	H	**– R:** Denotes the addition of an oil reservoir to an MGUS Series Cam Clutch	**-LH:** Denotes left hand rotation
			15		
			J		
			19		
			L		
	400		H		
			J		
			18		
			L		
			P		**-RH:** Denotes right hand rotation
			20		
			22		
	500		P		
			1		
			1B		

Above is a partial listing of available sizes. Complete list is identical to MGUS Series.

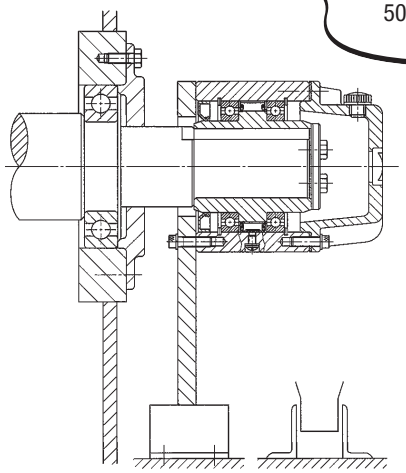

Typical Installation

MGUS-R SERIES CAM CLUTCH

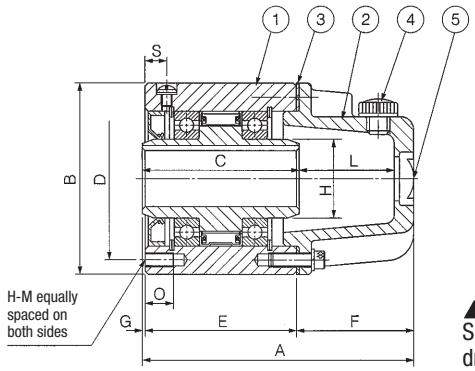

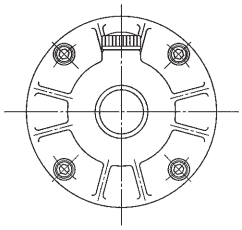

1 MGUS Cam Clutch
2 Oil reservoir
3 Packing
4 Lubrication filler plug (with vent hole)
5 Oil level gauge

▲ Specify right hand (RH) or left hand (LH) drive viewed from this end, inner race driving

Additional information including shaft and bore tolerances are found in the Engineering section starting on page 92.

Dimensions and Capacities

Model	Torque Capacity lb.ft. (Nm)	Drag Torque lb.ft. (Nm)	Max. Over-running (r/min) Inner Race	A in. (mm)	B in. (mm)	C in. (mm)	D PCD in. (mm)	E in. (mm)	F in. (mm)	G in. (mm)	H in. (mm)	S in. (mm)	H-M No. of Tapped Holes (Qt.) Thread	Oil oz. (mℓ)	Weight lb. (kg)
MGUS300R	280	0.12	2800	4.546	3.000/2.998	2.500	2.625	2.380	2.106	0.060	1.122	0.512	4 x 0.25-28	0.850	4.4
	(380)	(0.16)		(115.48)	(76.20/76.15)	(63.5)	(66.67)	(60.45)	(53.5)	(1.53)	(28.5)	(13)		(25)	(2)
MGUS400R	398	0.15	2600	4.826	3.500/3.498	2.750	2.875	2.690	2.106	0.030	1.248	0.630	4 x 0.312-24	1.020	6.6
	(539)	(0.20)		(122.59)	(88.90/88.85)	(69.85)	(73.03)	(68.33)	(53.5)	(0.76)	(31.7)	(16)		(30)	(3)
MGUS500R	1195	0.27	2400	6.053	4.250/4.248	3.500	3.625	3.375	2.618	0.060	1.748	0.630	4 x 0.312-24	1.700	12.1
	(1620)	(0.36)		(153.88)	(107.95/107.90)	(88.9)	(92.08)	(85.725)	(66.5)	(1.53)	(44.4)	(16)		(50)	(5.5)
MGUS600R	2316	0.44	2100	6.505	5.375/5.373	3.750	4.750	3.630	2.815	0.060	2.748	0.630	6 x 0.312-24	2.720	20.9
	(3140)	(0.59)		(165.23)	(136.53/136.48)	(95.25)	(120.65)	(92.20)	(71.5)	(1.53)	(69.8)	(16)		(80)	(9.5)
MGUS700R	5163	0.88	1500	8.149	7.125/7.123	5.000	6.250	4.880	3.209	0.060	3.996	0.787	8 x 0.375-24	4.590	46.3
	(7000)	(1.19)		(206.98)	(180.98/180.93)	(127)	(158.75)	(123.95)	(81.5)	(1.53)	(101.5)	(20)		(135)	(21)
MGUS750R	7007	2.03	1800	10.999	8.750/8.748	6.000	7.000	5.880	5.059	0.060	4.330	0.984	8 x 0.50-20	13.600	88.8
	(9500)	(2.75)		(279.38)	(222.25/222.20)	(152.4)	(177.8)	(149.35)	(128.5)	(1.53)	(110)	(25)		(400)	(40.3)
MGUS800R	13276	3.19	1300	11.531	10.000/9.998	6.000	8.940	5.880	5.591	0.060	5.512	0.984	8 x 0.50-20	17.000	111.6
	(18000)	(4.32)		(292.88)	(254.00/253.95)	(152.4)	(227.08)	(149.35)	(142)	(1.53)	(140)	(25)		(500)	(50.6)
MGUS900R	18070	3.98	1200	12.299	12.000/11.997	6.380	9.750	6.250	5.984	0.065	6.693	1.260	10 x 0.625-18	21.080	171.1
	(24500)	(5.39)		(312.40)	(304.80/304.72)	(162.05)	(247.65)	(158.75)	(152)	(1.65)	(170)	(32)		(620)	(77.6)
MGUS1000R	27290	4.77	1200	12.746	15.000/14.997	6.630	11.750	6.500	6.181	0.065	7.874	1.260	12 X 0.625-18	28.900	257.1
	(37000)	(6.47)		(323.75)	(381.00/380.92)	(168.40)	(298.45)	(165.1)	(157)	(1.65)	(200)	(32)		(850)	(116.6)

BB SERIES CAM CLUTCH

BB Series Cam Clutches are a combination of a 62 Series ball bearing and a cam style clutch. These units are designed for press fit applications and are available in five variations, combinations of metal shield or dust protective sealed type and with or without keyways on the inner and/or outer race to allow design and application flexibility. BB Series units come grease lubricated but metal shielded style can be adapted for oil bath lubrication.

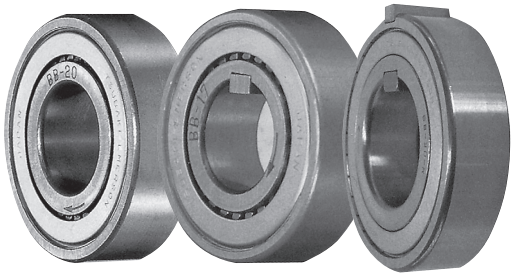

BB Series BB-K Series BB-KK Series

Example How to Order Code: BB Series Cam Clutch Base Unit

BB	15

Series	Size (Bore I.D.)	Construction
BB: Ideal for general applications	15	**Blank:** Metal shield on one side, retainer on other side
	17	
	20	
	25	
	30	
	35	
	40	

Specifications

Bearing Series	Inside Dia.	Torque Capacity	
		lb.ft.	(Nm)
6202	15 mm	21	(29)
6203	17 mm	32	(43)
6204	20 mm	45	(61)
6205	25 mm	58	(78)
6206	30 mm	103	(140)
6207	35 mm	128	(173)
6208	40 mm	192	(260)

Example How to Order Code: BB Series Cam Clutch with Key & Keyway

BB	15	KK

Series	Size (Bore I.D.)	Keyway
BB: Ideal for general applications	15	**K:** Metal shield on one side, retainer on other side. Keyway on inside diameter of Cam Clutch. Includes key. **KK:** Metal shield on one side, retainer on other side. Keyway on inside and outside diameter of Cam Clutch. Includes both keys.
	17	
	20	
	25	
	30	
	35	
	40	

Key Specifications

Inner Race b x h x length	Outer Race b' x h' x length
5 x 3 x 11	2 x 2 x 11
5 x 3 x 12	2 x 2 x 12
6 x 4 x 14	3 x 3 x 14
8 x 5 x 15	6 x 4 x 15
8 x 5 x 16	6 x 4 x 16
10 x 6 x 17	8 x 5 x 17
12 x 8 x 22	10 x 6 x 22

BB SERIES CAM CLUTCH

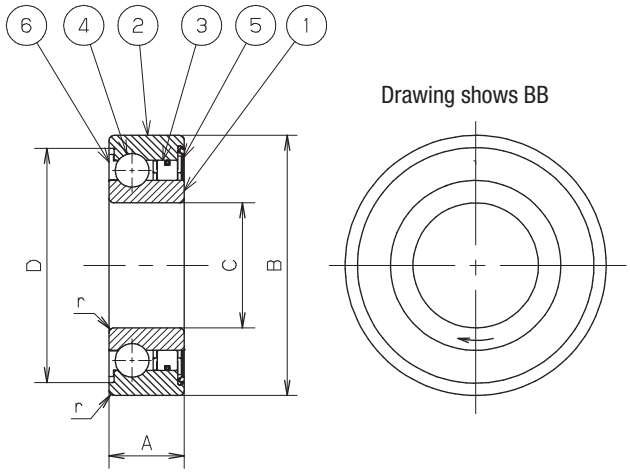

Drawing shows BB

1 – Inner race
2 – Outer race
3 – Cam cage
4 – Ball bearing
5 – Shield
6 – Retainer

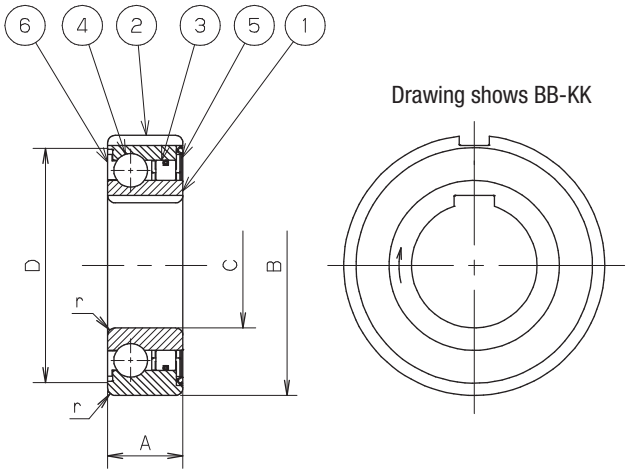

Drawing shows BB-KK

1 – Inner race
2 – Outer race
3 – Cam cage
4 – Ball bearing
5 – Shield
6 – Retainer
7 – Inner race key
8 – Outer race key

Additional information including shaft and bore tolerances are found in the Engineering section starting on page 92.

Dimensions and Capacities

Model	Torque Capacity lb.ft. (Nm)	Max Overrunning Inner Race r/min	Max Overrunning Outer Race r/min	Drag Torque BB BB-K BB-KK lb.ft. (Nm)	A BB BB-K BB-KK in. (mm)	B in. (mm)	C in. (mm)	D BB BB-K BB-KK in. (mm)	r in. (mm)	Bearing Loads Dynamic Cr lb. (N)	Bearing Loads Static Cor lb. (N)	Weight BB BB-K BB-KK lb. (g)
BB15	21	3600	2000	0.007	0.433	1.378	0.591	1.283	0.024	1338	726	0.1
	(29)			(0.010)	(11)	(35)	(15)	(32.6)	(0.6)	(5950)	(3230)	(50)
BB17	32	3500	1900	0.007	0.472	1.575	0.669	1.421	0.024	1574	832	0.2
	(43)			(0.010)	(12)	(40)	(17)	(36.1)	(0.6)	(7000)	(3700)	(80)
BB20	45	3000	1600	0.010	0.551	1.850	0.787	1.642	0.039	1911	1102	0.3
	(61)			(0.014)	(14)	(47)	(20)	(41.7)	(1)	(8500)	(4900)	(120)
BB25	58	2500	1400	0.013	0.591	2.047	0.984	1.827	0.039	2405	1416	0.3
	(78)			(0.017)	(15)	(52)	(25)	(46.4)	(1)	(10700)	(6300)	(150)
BB30	103	2000	1100	0.022	0.630	2.441	1.181	2.1653	0.039	2675	1776	0.5
	(140)			(0.030)	(16)	(62)	(30)	(55)	(1)	(11900)	(7900)	(230)
BB35	128	1800	1000	0.025	0.669	2.835	1.378	2.520	0.043	3035	2181	0.7
	(173)			(0.034)	(17)	(72)	(35)	(64)	(1.1)	(13500)	(9700)	(320)
BB40	192	1800	900	0.030	0.866	3.150	1.575	2.795	0.043	3260	2630	0.9
	(260)			(0.040)	(22)	(80)	(40)	(71)	(1.1)	(14500)	(11700)	(400)

BB-GD SERIES CAM CLUTCH

BB-GD Series Cam Clutches build upon the standard BB Series with the addition of complete rubber seals on both sides. The addition of rubber seals makes the BB-GD Series slightly wider (0.197", 5 mm) than the equivalent 62 Series ball bearing.

BB-GD Series

BB-GDK Series

Example How to Order Code: BB Series Cam Clutch with Rubber Seals

BB	15	GD
Series	Size (Bore I.D.)	Construction
BB: Ideal for general applications	15	**GD:** Rubber seals on both sides
	17	
	20	
	25	
	30	
	35	
	40	

Specifications

Bearing Series	Inside Dia.	Torque Capacity lb.ft.	Torque Capacity (Nm)
6202	15 mm	21	(29)
6203	17 mm	32	(43)
6204	20 mm	45	(61)
6205	25 mm	58	(78)
6206	30 mm	103	(140)
6207	35 mm	128	(173)
6208	40 mm	192	(260)

Example How to Order Code: BB Series Cam Clutch with Rubber Seals and Keyways

BB	15	GD	K
Series	Size (Bore I.D.)	Construction	Keyway
BB: Ideal for general applications	15	**GD:** Rubber seals on both sides	**K:** Keyway on inside diameter of Cam Clutch and includes key
	17		
	20		
	25		
	30		
	35		
	40		

Key Specifications

Inner Race b x h x length
5 x 3 x 11
5 x 3 x 12
6 x 4 x 14
8 x 5 x 15
8 x 5 x 16
10 x 6 x 17
12 x 8 x 22

BB-GD SERIES CAM CLUTCH

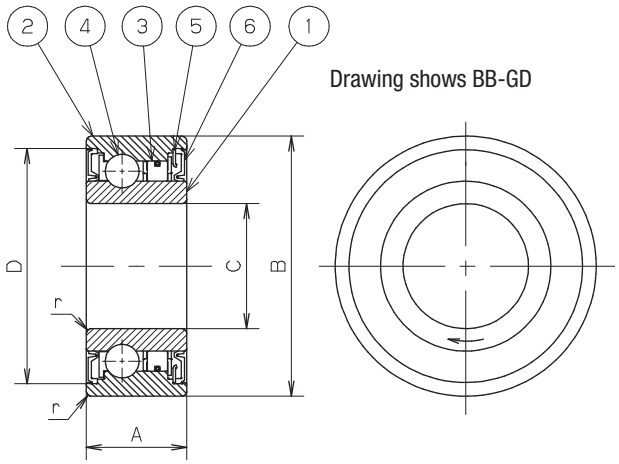

1 – Inner race
2 – Outer race
3 – Cam cage
4 – Ball bearing
5 – Plate
6 – Seal

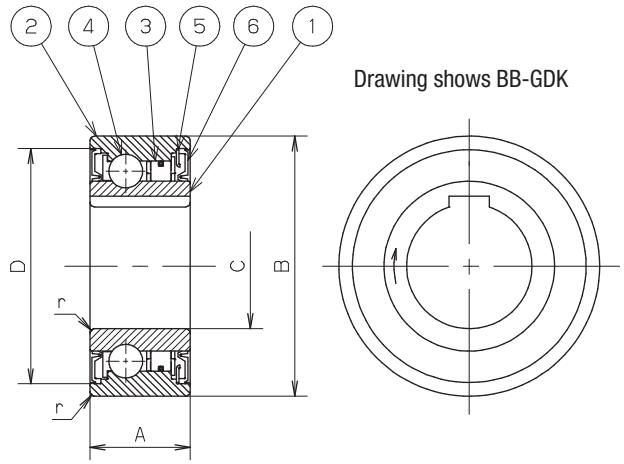

1 – Inner race
2 – Outer race
3 – Cam cage
4 – Ball bearing
5 – Plate
6 – Seal
7 – Inner race key

Additional information including shaft and bore tolerances are found in the Engineering section starting on page 92.

Dimensions and Capacities

Model	Torque Capacity lb.ft. (Nm)	Max Overrunning Inner Race r/min	Max Overrunning Outer Race r/min	Drag Torque BB-GD BB-GDK lb.ft. (Nm)	A BB-GD BB-GDK in. (mm)	B in. (mm)	C in. (mm)	D BB-GD BB-GDK in. (mm)	r in. (mm)	Bearing Loads Dynamic lb. (N)	Bearing Loads Static lb. (N)	Weight (n) BB-GD BB-GDK lb. (g)
BB15	21	3600	2000	0.030	0.630	1.378	0.591	1.278	0.024	1338	726	0.2
	(29)			(0.04)	(16)	(35)	(15)	(32.45)	(0.6)	(5950)	(3230)	(70)
BB17	32	3500	1900	0.037	0.669	1.575	0.669	1.435	0.024	1574	832	0.2
	(43)			(0.05)	(17)	(40)	(17)	(36.45)	(0.6)	(7000)	(3700)	(100)
BB20	45	3000	1600	0.041	0.748	1.850	0.787	1.667	0.039	1911	1102	0.3
	(61)			(0.055)	(19)	(47)	(20)	(42.35)	(1.0)	(8500)	(4900)	(150)
BB25	58	2500	1400	0.041	0.787	2.047	0.984	1.852	0.039	2405	1416	0.4
	(78)			(0.055)	(20)	(52)	(25)	(47.05)	(1.0)	(10700)	(6300)	(200)
BB30	103	2000	1100	0.043	0.827	2.441	1.181	2.189	0.039	2675	1776	0.6
	(140)			(0.058)	(21)	(62)	(30)	(55.6)	(1.0)	(11900)	(7900)	(280)
BB35	128	1800	1000	0.044	0.866	2.835	1.378	2.543	0.043	3035	2181	0.9
	(173)			(0.06)	(22)	(72)	(35)	(64.6)	(1.1)	(13500)	(9700)	(410)
BB40	192	1800	900	0.059	1.063	3.150	1.575	2.819	0.043	3260	2630	1.3
	(260)			(0.08)	(27)	(80)	(40)	(71.6)	(1.1)	(14500)	(11700)	(600)

TSS SERIES CAM CLUTCH

TSS Series Cam Clutch is designed for press fit installation with outside dimensions the same as the 62 Series ball bearing. As a sprag clutch, torque capacities are often higher than a similar ramp & roller design. This design provides easy handling and installation, most often with a Series 62 ball bearing located next to the TSS Cam Clutch. The TSS Series is ideal for applications that require high speed inner race overrunning in a very compact package.

TSS Series Cam Clutch

Example How to Order Code: TSS Series Cam Clutch

TSS	15

Series	Frame Size (Bore I.D.)
TSS: General application with press fit installation	8
	10
	12
	15
	20
	25
	30
	35
	40
	45
	50
	60

Specifications

Bearing Series	Inside Dia.	Torque Capacity lb.ft.	Torque Capacity (Nm)
628	8 mm	5	(6.7)
6200	10 mm	9	(12)
6201	12 mm	13	(17)
6202	15 mm	16	(22)
6204	20 mm	30	(41)
6205	25 mm	41	(56)
6206	30 mm	77	(105)
6307	35 mm	100	(136)
6208	40 mm	218	(296)
6209	45 mm	256	(347)
6210	50 mm	297	(403)
6212	60 mm	479	(649)

TSS installation example

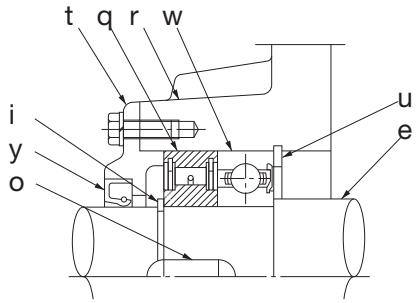

e - Shaft
i - Snap ring shaft
o - Key
q - TSS Cam Clutch
r - Housing
t - Cover
u - Snap ring
w - Bearing
y - Oil seal

TSS SERIES CAM CLUTCH

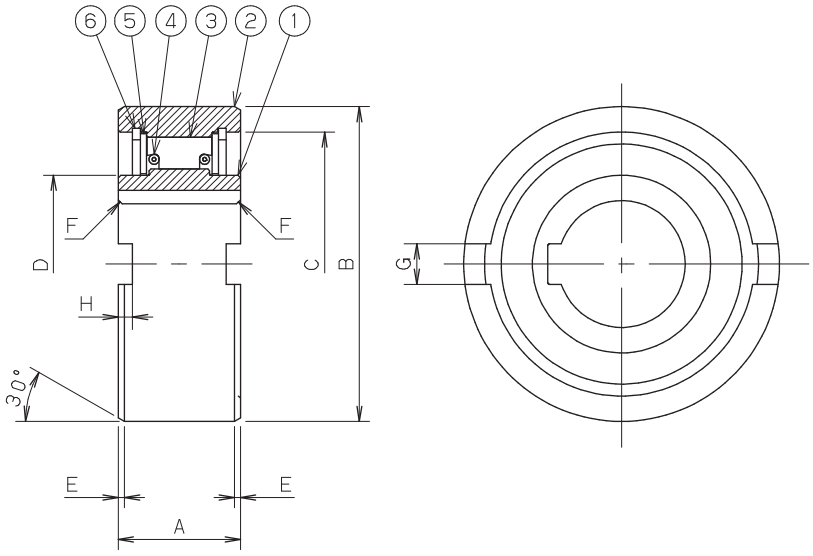

1 – Inner race
2 – Outer race
3 – Cam
4 – Spring
5 – Plate
6 – Snap ring

Additional information including shaft and bore tolerances are found in the Engineering section starting on page 92.

Dimensions and Capacities

Model	Torque Capacity lb.ft. (Nm)	Max. Overrunning Inner Race r/min	Max. Overrunning Outer Race r/min	Drag Torque lb.ft. (Nm)	Bore Size in. (mm)	Keyway (mm)	A in. (mm)	B in. (mm)	C in. (mm)	D in. (mm)	E in. (mm)	F in. (mm)	Weight lb. (g)
TSS 8	4.9	6000	3000	0.004	0.315	2 x 1.0	0.315	0.945	0.874	0.449	0.024	0.024	0.031
	(6.7)			(0.005)	(8)		(8)	(24)	(22.2)	(11.4)	(0.6)	(0.6)	(14)
TSS10	8.9	4500	2300	0.005	0.394	3 x 1.4	0.354	1.181	1.063	0.614	0.024	0.024	0.059
	(12)			(0.007)	(10)		(9)	(30)	(27)	(15.6)	(0.6)	(0.6)	(27)
TSS12	12.5	4000	2000	0.007	0.472	4 x 1.8	0.394	1.260	1.161	0.709	0.024	0.024	0.068
	(17)			(0.009)	(12)		(10)	(32)	(29.5)	(18)	(0.6)	(0.6)	(31)
TSS15	16.2	3500	1800	0.007	0.591	5 x 1.2	0.433	1.378	1.260	0.811	0.024	0.024	0.086
	(22)			(0.01)	(15)		(11)	(35)	(32)	(20.6)	(0.6)	(0.6)	(39)
TSS20	30.2	2600	1300	0.007	0.787	6 x 1.6	0.551	1.850	1.575	1.051	0.031	0.031	0.253
	(41)			(0.01)	(20)		(14)	(47)	(40)	(26.7)	(0.8)	(0.8)	(115)
TSS25	41.3	2200	1100	0.015	0.984	8 x 2.0	0.591	2.047	1.772	1.260	0.031	0.031	0.308
	(56)			(0.02)	(25)		(15)	(52)	(45)	(32)	(0.8)	(0.8)	(140)
TSS30	77.4	1800	900	0.022	1.181	8 x 2.0	0.630	2.441	2.165	1.575	0.031	0.039	0.473
	(105)			(0.03)	(30)		(16)	(62)	(55)	(40)	(0.8)	(1)	(215)
TSS35	100.3	1600	800	0.022	1.378	10 x 2.4	0.669	2.835	2.480	1.772	0.031	0.039	0.660
	(136)			(0.03)	(35)		(17)	(72)	(63)	(45)	(0.8)	(1)	(300)
TSS40	218.3	1400	700	0.133	1.575	12 x 2.2	0.709	3.150	2.835	1.969	0.031	0.039	0.935
	(296)			(0.18)	(40)		(18)	(80)	(72)	(50)	(0.8)	(1)	(425)
TSS45	255.9	1300	650	0.155	1.772	14 x 2.1	0.748	3.346	2.972	2.244	0.047	0.039	1.089
	(347)			(0.21)	(45)		(19)	(85)	(75.5)	(57)	(1.2)	(1)	(495)
TSS50	297.2	1200	600	0.162	1.969	14 x 2.1	0.787	3.543	3.228	2.441	0.047	0.039	1.199
	(403)			(0.22)	(50)		(20)	(90)	(82)	(62)	(1.2)	(1)	(545)
TSS60	478.7	910	460	0.243	2.362	18 x 2.3	0.866	4.331	3.937	3.150	0.047	0.059	2.090
	(649)			(0.33)	(60)		(22)	(110)	(100)	(80)	(1.2)	(1.5)	(950)

TFS SERIES CAM CLUTCH

TFS Series Cam Clutch is a sprag type clutch designed for press fit installation. Sprag type designs typically have a higher torque capacity than a similarly sized ramp & roller type clutch. TFS has two vertical keyways on the outer race to assist with locating. Outside dimensions are the same as Series 63 ball bearings. This design is ideal for general inner or outer race overrunning applications. Since the TFS Series does not include an integral bearing, installing the TFS Cam Clutch next to a bearing which handles both the axial and radial loads is the typical application.

TFS Series Cam Clutch

Example How to Order Code: TFS Series Cam Clutch

TFS	25
Series	Frame Size (Bore I.D.)
TFS: Inner or outer race overrunning	12
	15
	17
	20
	25
	30
	35
	40
	45
	50
	60
	70
	80

Specifications

Bearing Series	Inside Dia.	Torque Capacity lb.ft.	Torque Capacity (Nm)
6301	12	13.3	(18)
6302	15	20.7	(28)
6303	17	36.9	(50)
6304	20	62.0	(84)
6305	25	94.4	(128)
6306	30	148	(200)
6307	35	350	(475)
6308	40	448	(607)
6309	45	558	(756)
6310	50	829	(1124)
6312	60	1457	(1975)
6314	70	1854	(2514)
6316	80	2894	(3924)

TFS installation example

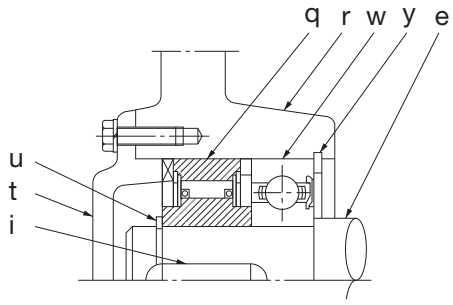

e - Shaft
i - Key
q - TFS Cam Clutch
r - Housing
t - Cover
u - Snap ring shaft
w - Bearing
y - Snap ring

TFS SERIES CAM CLUTCH

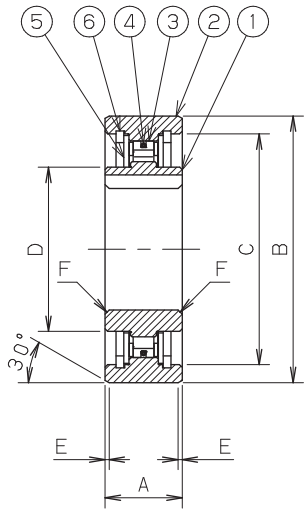

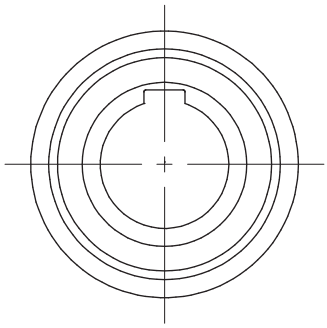

1 – Inner race
2 – Outer race
3 – Cam
4 – Spring
5 – Plate
6 – Snap ring

Additional information including shaft and bore tolerances are found in the Engineering section starting on page 92.

Dimensions and Capacities

Model	Torque Capacity lb.ft. (Nm)	Max. Overrunning Inner Race r/min	Max. Overrunning Outer Race r/min	Drag Torque lb.ft. (Nm)	Bore Size in. (mm)	Keyway (mm)	A in. (mm)	B in. (mm)	C in. (mm)	D in. (mm)	E in. (mm)	F in. (mm)	G in. (mm)	H in. (mm)	Weight lb. (g)
TFS12	13.3	4500	2300	0.030	0.472	4 x 1.8	0.512	1.378	1.181	0.709	0.024	0.012	0.157	0.055	0.150
	(18)			(0.04)	(12)		(13)	(35)	(30)	(18)	(0.6)	(0.3)	(4)	(1.4)	(68)
TFS15	20.7	3500	1800	0.044	0.591	5 x 1.2	0.709	1.654	1.417	0.866	0.031	0.012	0.197	0.071	0.264
	(28)			(0.06)	(15)		(18)	(42)	(36)	(22)	(0.8)	(0.3)	(5)	(1.8)	(120)
TFS17	36.9	3200	1600	0.081	0.669	5 x 1.2	0.748	1.850	1.496	0.866	0.047	0.031	0.197	0.091	0.330
	(50)			(0.11)	(17)		(19)	(47)	(38)	(22)	(1.2)	(0.8)	(5)	(2.3)	(150)
TFS20	62.0	2500	1300	0.133	0.787	6 x 1.6	0.827	2.047	1.772	1.063	0.047	0.031	0.236	0.091	0.484
	(84)			(0.18)	(20)		(21)	(52)	(45)	(27)	(1.2)	(0.8)	(6)	(2.3)	(220)
TFS25	94.4	2000	1000	0.140	0.984	8 x 2.0	0.945	2.441	2.047	1.378	0.047	0.031	0.315	0.110	0.792
	(128)			(0.19)	(25)		(24)	(62)	(52)	(35)	(1.2)	(0.8)	(8)	(2.8)	(360)
TFS30	148	1600	800	0.155	1.181	8 x 2.0	1.063	2.835	2.441	1.575	0.071	0.039	0.394	0.098	1.166
	(200)			(0.21)	(30)		(27)	(72)	(62)	(40)	(1.8)	(1.0)	(10)	(2.5)	(530)
TFS35	350	1400	700	0.310	1.378	10 x 2.4	1.220	3.150	2.756	1.890	0.071	0.039	0.472	0.138	1.738
	(475)			(0.42)	(35)		(31)	(80)	(70)	(48)	(1.8)	(1.0)	(12)	(3.5)	(790)
TFS40	448	1300	650	0.339	1.575	12 x 2.2	1.299	3.543	3.071	2.146	0.071	0.039	0.472	0.161	2.310
	(607)			(0.46)	(40)		(33)	(90)	(78)	(54.5)	(1.8)	(1.0)	(12)	(4.1)	(1050)
TFS45	558	1100	550	0.413	1.772	14 x 2.1	1.417	3.937	3.358	2.323	0.071	0.039	0.551	0.181	3.014
	(756)			(0.56)	(45)		(36)	(100)	(85.3)	(59)	(1.8)	(1.0)	(14)	(4.6)	(1370)
TFS50	829	1000	500	0.443	1.969	14 x 2.1	1.575	4.331	3.622	2.559	0.071	0.039	0.551	0.220	4.180
	(1124)			(0.60)	(50)		(40)	(110)	(92)	(65)	(1.8)	(1.0)	(14)	(5.6)	(1900)
TFS60	1457	840	420	0.642	2.362	18 x 2.3	1.811	5.118	4.331	3.307	0.102	0.059	0.709	0.217	6.842
	(1975)			(0.87)	(60)		(46)	(130)	(110)	(84)	(2.6)	(1.5)	(18)	(5.5)	(3110)
TFS70	1854	750	380	0.671	2.756	20 x 2.7	2.008	5.906	4.921	3.583	0.102	0.059	0.787	0.272	9.658
	(2514)			(0.91)	(70)		(51)	(150)	(125)	(91)	(2.6)	(1.5)	(20)	(6.9)	(4390)
TFS80	2894	670	340	0.900	3.150	22 x 3.1	2.283	6.693	5.512	3.937	0.102	0.059	0.787	0.295	14.168
	(3924)			(1.22)	(80)		(58)	(170)	(140)	(100)	(2.6)	(1.5)	(20)	(7.5)	(6440)

BUS200 SERIES CAM CLUTCH

BUS200 Series Cam Clutch is a general purpose Cam Clutch used in backstop, overrunning, and indexing applications. Generally the customer supplies the inner race as a component of his machinery but if desired, Tsubaki can also provide an inner race. A second very convenient feature is that the BUS200 Series outside diameter matches with 6200 Series ball bearings. Because of the common popular dimensions, BUS200 Series Cam Clutches are found as integral components in many pieces of machinery; these include backstops within gear boxes and as components within timing gear applications. BUS200 Series ships pre-lubricated with grease. Oil lubrication is generally recommended for indexing applications.

Example How to Order Code: BUS200 Series Cam Clutch

BUS	205
Series	Model #
BUS: Shaft mounted and pre-lubricated with special grease	203
	204
	205
	206
	207
	208
	209
	210
	211
	212
	213
	214

Specifications

Bearing Series	Torque Capacity		Max Overrunning (RPM)	
	lb.ft.	(Nm)	Shaft	Outer Race
6203	40	(54)	2400	500
6204	52	(70)	2400	500
6205	81	(110)	1800	400
6206	177	(240)	1800	350
6207	280	(380)	1800	300
6208	405	(549)	1800	200
6209	405	(549)	1800	200
6210	578	(784)	1200	200
6211	578	(784)	1200	200
6212	907	(1230)	1200	180
6213	907	(1230)	1200	180
6214	1025	(1390)	1000	180

Notes: 1. Tsubaki can supply with a stronger internal spring for more intensive indexing applications. Model number is "BUS___SS". Contact Tsubaki for details.
Notes: 2. When supplying BUS200 series Cam Clutch with an inner race, model number is "BUS___IR". Contact Tsubaki for details.

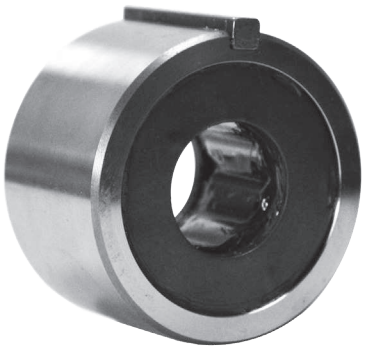

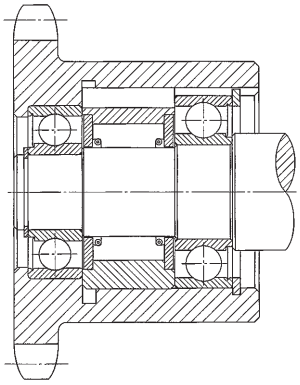

BUS 200 Series
Typical Installation

All Tsubaki BUS200 Series Cam Clutch units have the same outer race diameter as the equivalent JIS bearing number. When installing BUS200 Series units, mount the clutch with bearings on either side of the unit, or on one side to take up radial and/or thrust loads.

BUS200 SERIES CAM CLUTCH

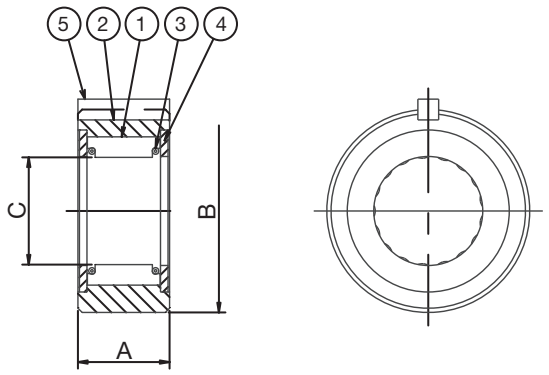

1 Cam
2 Outer race
3 Spring
4 Side plate
5 Key

Additional information including shaft and bore tolerances are found in the Engineering section starting on page 92.

Dimensions and Capacities

Model	Drag Torque lb.ft. (Nm)	Max Indexing (cycle/min)	A in. (mm)	B in. (mm)	C Shaft Dia. in. (mm)	Key base x height x length in. (mm)	Use with Bearing Number	Weight lb. (kg)
BUS203	0.07 (0.10)	150	1.000 (25.4)	1.5743/1.5728 (39.987/39.949)	0.650/0.649 (16.510/16.485)	1/8 x 1/8 x 1"	6203	0.5 (0.23)
BUS204	0.07 (0.10)	150	1.000 (25.4)	1.8498/1.8483 (46.985/46.947)	0.740/0.739 (18.796/18.771)	3/16 x 3/16 x 1"	6204	0.7 (0.34)
BUS205	0.15 (0.2)	150	1.000 (25.4)	2.0463/2.0448 (51.976/51.938)	0.930/0.929 (23.622/23.597)	3/16 x 3/16 x 1"	6205	1.0 (0.45)
BUS206	0.15 (0.2)	150	1.125 (28.575)	2.4403/2.4388 (61.984/61.946)	1.290/1.289 (32.766/32.741)	1/4 x 1/4 x 1-1/4"	6206	1.5 (0.68)
BUS207	0.15 (0.2)	150	1.125 (28.575)	2.8341/2.8326 (71.986/71.948)	1.657/1.656 (42.088/42.063)	1/4 x 1/4 x 1-1/4"	6207	1.8 (0.8)
BUS208	0.15 (0.2)	150	1.250 (31.75)	3.1491/3.1476 (79.987/79.949)	1.841/1.840 (46.761/46.736)	3/8 x 3/8 x 1-1/4"	6208	2.0 (0.91)
BUS209	0.15 (0.2)	150	1.250 (31.75)	3.3457/3.3450 (84.980/84.965)	1.841/1.840 (46.761/46.736)	3/8 x 3/8 x 1-1/4"	6209	2.1 (0.95)
BUS210	0.21 (0.29)	150	1.250 (31.75)	3.5428/3.5413 (89.987/89.949)	2.209/2.208 (56.109/56.084)	3/8 x 3/8 x 1-1/4"	6210	2.2 (1)
BUS211	0.21 (0.29)	150	1.250 (31.75)	3.9362/3.9350 (99.980/99.950)	2.209/2.208 (56.109/56.084)	3/8 x 3/8 x 1-1/4"	6211	3.1 (1.4)
BUS212	0.21 (0.29)	150	1.654 (42)	4.3299/4.3287 (109.980/109.950)	2.757/2.756 (70.029/70.004)	3/8 x 3/8 x 1-5/8"	6212	4.0 (1.8)
BUS213	0.21 (0.29)	150	1.654 (42)	4.7236/4.7224 (119.980/119.950)	2.757/2.756 (70.029/70.004)	3/8 x 3/8 x 1-5/8"	6213	5.1 (2.3)
BUS214	0.29 (0.39)	150	1.654 (42)	4.920/4.919 (124.968/124.943)	3.124/3.123 (79.356/79.331)	1/2 x 1/2 x 1-5/8"	6214	5.3 (2.4)

PBUS SERIES CAM CLUTCH

PBUS Series Cam Clutch is intended for use in general overrunning or indexing applications. The PBUS Series comes pre-lubricated with synthetic grease for easy installation and long service life. The outer race has provision for mounting gears, pulleys, and sprockets. Specify direction of rotation when ordering.

Example How to Order Code: PBUS Series Cam Clutch

PBUS	3	-	H	-	RH
Series	Frame Size		Bore Symbol		Rotation
PBUS: General overrunning or indexing applications	3	-	F	-	**RH:** Right hand rotation **LH:** Left hand rotation
			10		
			H		
	5		H		
			J		
			16		
	6		L		
			20		
	8		P		
			25		
			1		
	10		1B		
			30		
			1D		
	12		1F		
			1H		
			40		
	14		1J		
			1L		
			45		

Specifications

Bore Size in.	Bore Size (mm)	Keyseat in.	Torque Capacity lb.ft	Torque Capacity (Nm)
0.375	(9.53)	*		
0.394	(10)	*	41.3	(56)
0.500	(12.70)	*		
0.500	(12.70)	1/8 x 1/16"		
0.625	(15.88)	3/16 x 3/32"	114	(155)
0.630	(16)	5 x 2.0 mm		
0.750	(19.05)	3/16 x 3/32"	301	(410)
0.787	(20)	6 x 2.8 mm*		
0.875	(22.23)	1/4 x 1/8"		
0.984	(25)	8 x 3.8 mm*	454	(615)
1.000	(25.40)	1/4 x 1/8"		
1.125	(28.58)	5/16 x 5/32"		
1.181	(30)	8 x 3.8 mm	679	(920)
1.250	(31.75)	5/16 x 5/32"		
1.375	(34.93)	5/16 x 5/32"		
1.500	(38.10)	3/8 x 3/16"	1365	(1850)
1.575	(40)	12 x 3.3 mm*		
1.625	(41.28)	7/16 x 7/32"		
1.750	(44.45)	7/16 x 7/32"	1623	(2200)
1.772	(45)	12 x 3.3 mm*		

* PBUS3 is secured to the shaft by set screw.

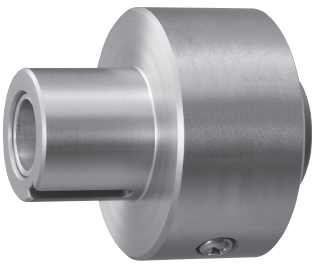

Typical PBUS Series Installation

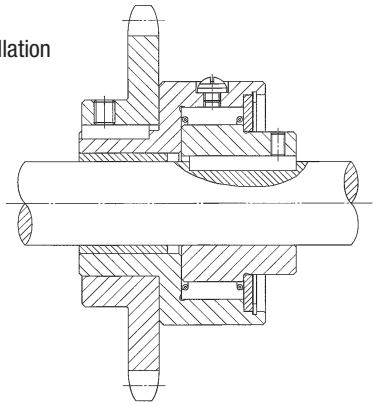

PBUS SERIES CAM CLUTCH

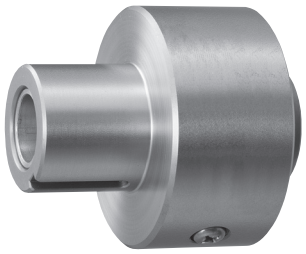

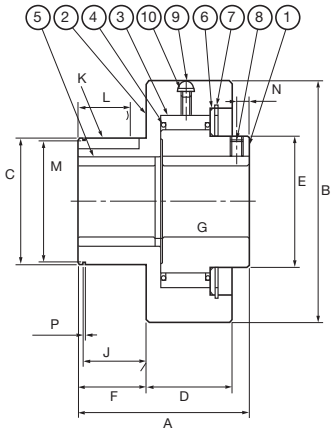

▲ Specify right (RH) or left hand (LH) drive engagement viewed from this end, inner race driving

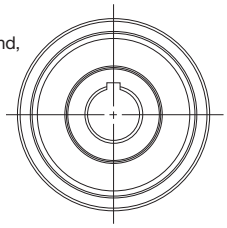

1 Inner race
2 Outer race
3 Cam
4 Spring
5 Plane bearing
6 Plate
7 Spirolox
8 Set screw
9 Machine screw
10 Seal washer

Additional information including shaft and bore tolerances are found in the Engineering section starting on page 92.

Dimensions and Capacities

Model	Drag Torque lb.ft. (Nm)	Max. Overrunning (r/min) Inner Race	Max. Overrunning (r/min) Outer Race	Max. Indexing (cycle/min)	A in. (mm)	B in. (mm)	C in. (mm)	D in. (mm)	E in. (mm)	F in. (mm)	G in. (mm)
PBUS3	0.15 (0.2)	1800	900	150	1.88 (47.75)	1.969 (50)	0.875/0.874 (22.23/22.20)	0.807 (20.5)	0.970 (25)	0.810 (20.58)	0.940 (23.9)
PBUS5	0.15 (0.2)	1800	900	150	2.75 (69.85)	2.362 (60)	1.250/1.249 (31.75/31.72)	1.250 (31.75)	1.378 (35)	1.000 (25.4)	1.630 (41.40)
PBUS6	0.15 (0.2)	1500	800	150	3.19 (80.97)	2.875 (73)	1.375/1.374 (34.93/35.00)	1.563 (39.69)	1.457 (37)	1.313 (33.34)	1.687 (42.85)
PBUS8	0.21 (0.29)	1200	650	150	3.56 (90.49)	3.268 (83)	1.750/1.749 (44.45/44.42)	1.750 (44.45)	1.770 (45)	1.437 (36.51)	1.875 (47.63)
PBUS10	0.29 (0.39)	1000	400	150	3.50 (88.90)	3.750 (95.25)	2.250/2.249 (57.15/57.13)	1.750 (44.45)	2.205 (56)	1.440 (36.58)	1.812 (46.02)
PBUS12	0.29 (0.39)	800	300	150	3.88 (98.25)	4.449 (113)	2.500/2.499 (63.50/63.48)	1.935 (49.15)	2.598 (66)	1.435 (36.45)	2.125 (53.98)
PBUS14	0.44 (0.59)	700	300	150	4.38 (111.13)	5.500 (139.7)	2.875/2.874 (73.03/73.00)	2.190 (55.63)	2.992 (76)	1.750 (44.45)	2.250 (57.15)

Dimensions and Capacities

Model	J in. (mm)	M in. (mm)	P in. (mm)	L in. (mm)	K in. (mm)	N in. (mm)	Lubrication Filler Plug (metric)	Set Screw	Weight lb. (kg)
PBUS3	0.715/0.720 (18.16/18.29)	0.841/0.835 (21.36/21.21)	0.036/0.042 (0.91/1.06)	0.500 (12.7)	1/8 x 1/16 (3.175 x 1.58)	0.157 (4)	M6 x P1.0	#8-36 x 1/4	0.5 (0.23)
PBUS5	0.900/0.905 (22.86/22.99)	1.206/1.198 (30.63/30.43)	0.048/0.054 (1.22/1.37)	0.562 (14.27)	3/16 x 3/32 (4.762 x 2.38)	0.25 (6.35)	M6 x P1.0	#8-36 x 1/4	1.3 (0.58)
PBUS6	1.215/1.220 (30.86/30.99)	1.327/1.319 (33.70/33.50)	0.048/0.054 (1.22/1.37)	0.937 (23.80)	3/16 x 3/32 (4.76 x 2.38)	0.18 (4.6)	M6 x P1.0	#10-32 x 1/4	2.4 (1.1)
PBUS8	1.315/1.320 (33.40/33.53)	1.696/1.686 (42.82/43.08)	0.056/0.062 (1.42/1.57)	1.000 (25.4)	1/4 x 1/8 (6.35 x 3.175)	0.236 (6)	M6 x P1.0	1/4-28 x 1/4	3.5 (1.6)
PBUS10	1.340/1.345 (34.04/34.16)	2.182/2.170 (55.42/55.12)	0.056/0.062 (1.42/1.57)	0.937 (23.80)	5/16 x 5/32 (7.938 x 3.96)	0.2 (5.1)	M6 x P1.0	1/4-28 x 1/4	5.5 (2.5)
PBUS12	1.311/1.321 (33.30/33.55)	2.391/2.379 (60.73/60.43)	0.122/0.128 (3.10/3.25)	1.190 (30.23)	3/8 x 3/16 (9.525 x 4.763)	0.307 (7.8)	M6 x P1.0	5/16-24 x 1/4	7.9 (3.6)
PBUS14	1.625/1.630 (41.28/41.40)	2.787/2.775 (70.79/70.49)	0.056/0.076 (1.42/1.92)	1.340 (34.04)	7/16 x 7/32 (11.113 x 5.555)	0.315 (8)	M6 x P1.0	5/16-24 x 3/8	13.2 (6)

MZ SERIES CAM CLUTCH

MZ Series Cam Clutch products are designed for general overrunning applications. The MZ Series can be used in applications which require the inner or outer race to have overrunning capability. The MZ Series comes pre-lubricated with grease and is ready to install. No lubrication maintenance is required. This series is ideal for gears, pulleys and clutch assemblies.

Example How to Order Code: MZ Series Cam Clutch

MZ	15	-	H
Series	Size		Bore Symbol
MZ: Overruning, Indexing, Backstopping	15	-	H
			15
	17	-	J
			17
	20	-	L
			20
	30	-	22
			P
			25
			1
			30
	35	-	1D
			35
	45	-	1H
			40
			1L
			45
	60	-	50
			2
			55
			60
	70	-	65
			70

The bore sizes listed below are standards.
Special bore sizes are available upon request.

Specifications

Bore Size	Bore Keyway	Torque Capacity lb.ft.	Torque Capacity (Nm)
0.500"	1/8 x 1/16"	137	(186)
15 mm	5 x 2.3 mm		
0.625"	1/16 x 3/32"	159	(215)
17 mm	5 x 2.3 mm		
0.750"	3/16 x 3/32"	238	(323)
20 mm	6 x 2.8 mm		
22 mm	6 x 2.8 mm	542	(735)
0.875"	3/16 x 3/32"		
25 mm	8 x 3.3 mm		
1.000"	1/4 x 1/8"		
30 mm	10 x 3.3 mm		
1.250"	1/4 x 1/8"	797	(1080)
35 mm	10 x 3.3 mm		
1.500"	3/8 x 3/16"	1195	(1620)
40 mm	12 x 3.3 mm		
1.750"	3/8 x 3/16"		
45 mm	14 x 3.8 mm		
50 mm	14 x 3.8 mm	1556	(2110)
2.000"	1/2 x 1/4"		
55 mm	16 x 4.3 mm		
60 mm	18 x 4.4 mm		
65 mm	18 x 4.4 mm	2242	(3040)
70 mm	20 x 4.9 mm		

MZ SERIES CAM CLUTCH

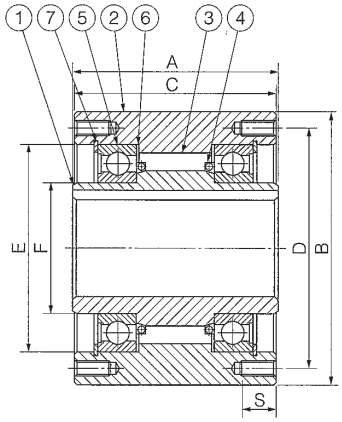

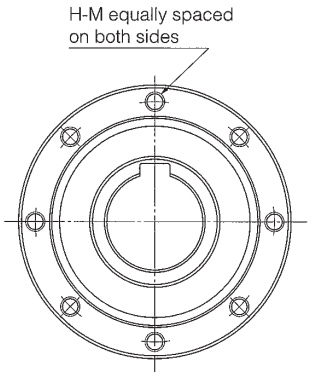

1 Inner race
2 Outer race
3 Cam
4 Spring
5 Bearing (ZZ type)
6 Side plate
7 Spirolox

Additional information including shaft and bore tolerances are found in the Engineering section starting on page 92.

Dimensions and Capacities

Model	Torque Capacity lb.ft. (Nm)	Drag Torque lb.ft. (Nm)	Max Overrunning (RPM) Shaft	Max Overrunning (RPM) Outer Race	Max Indexing (cycle/ min)	A in. (mm)	B in. (mm)	C in. (mm)	PCD D in. (mm)	E (M6) in. (mm)	F in. (mm)	G in. (mm)	H-M Qt. x Size x Pitch	S in. (mm)	Weight lb. (kg)
MZ15	137 (186)	0.15 (0.20)	2200	900	150	2.441 (62)	2.677 (68)	2.362 (60)	2.283 (58)	1.850 (47)	0.984 (25)	0.217 (5.5)	6 x M5 x 0.8	0.394 (10)	3.1 (1.4)
MZ17	159 (215)	0.15 (0.20)	2000	800	150	2.598 (66)	2.953 (75)	2.520 (64)	2.520 (64)	2.047 (52)	1.102 (28)	0.248 (6.3)	6 x M5 x 0.8	0.394 (10)	4.0 (1.8)
MZ20	238 (323)	0.21 (0.29)	1900	700	150	2.638 (67)	3.150 (80)	2.559 (65)	2.677 (68)	2.165 (55)	1.181 (30)	0.299 (7.6)	6 x M6 x 1.0	0.472 (12)	4.4 (2)
MZ30	542 (735)	0.29 (0.39)	1800	500	150	3.228 (82)	3.937 (100)	3.150 (80)	3.465 (88)	2.953 (75)	1.772 (45)	0.350 (8.9)	6 x M8 x 1.25	0.630 (16)	8.1 (3.7)
MZ35	797 (1080)	0.36 (0.49)	1700	300	150	3.425 (87)	4.331 (110)	3.346 (85)	3.740 (95)	3.150 (80)	1.969 (50)	0.343 (8.7)	6 x M8 x 1.25	0.630 (16)	10.6 (4.8)
MZ45	1195 (1620)	0.51 (0.69)	1700	300	150	3.622 (92)	4.921 (125)	3.543 (90)	4.331 (110)	3.740 (95)	2.362 (60)	0.331 (8.4)	8 x M8 x 1.25	0.630 (16)	13.6 (6.2)
MZ60	1556 (2110)	0.72 (0.98)	1600	250	150	4.016 (102)	6.102 (155)	3.937 (100)	5.512 (140)	4.921 (125)	3.150 (80)	0.358 (9.1)	8 x M8 x 1.25	0.630 (16)	22.4 (10.2)
MZ70	2242 (3040)	0.94 (1.27)	1300	250	150	4.134 (105)	6.890 (175)	4.055 (103)	6.378 (162)	5.709 (145)	3.740 (95)	0.339 (8.6)	8 x M8 x 1.25	0.630 (16)	29.0 (13.2)

Typical Installation

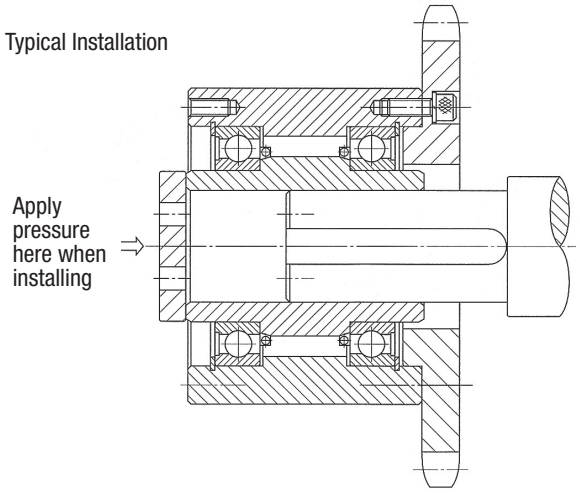

OB SERIES ON/OF CAM CLUTCH BOX

Features:

- Developed for continuous high-speed operation
- Oil bath and water cooled options
- Overrunning up to 3,600-rpm
- Clutch engagement up to 3,600-rpm

Tsubaki OB-ON Series Cam Clutch Box is designed for use in applications requiring high speed overrunning with low to high-speed engagement. The OB-ON Series is commonly used in dual speed drives, energy recovery, and conveyor systems.

The OB-OF variant offers even higher overrunning and cam engagement speeds. The continuous operation at high speeds is facilitated by the use of water cooling to keep the assembly and the oil temperature in the appropriate range.

Example How to Order Code: OB Series Cam Clutch Box

OB	140	ON

Series	Frame Size	Applicable Lubrication System
OB: Overrunning Cam Clutch Box	60	ON: Oil bath OF: Oil bath & liquid cooled
	100	
	120	
	140	

Please contact Tsubaki for additional sizes, specifications and options.

CAM CLUTCH BOX

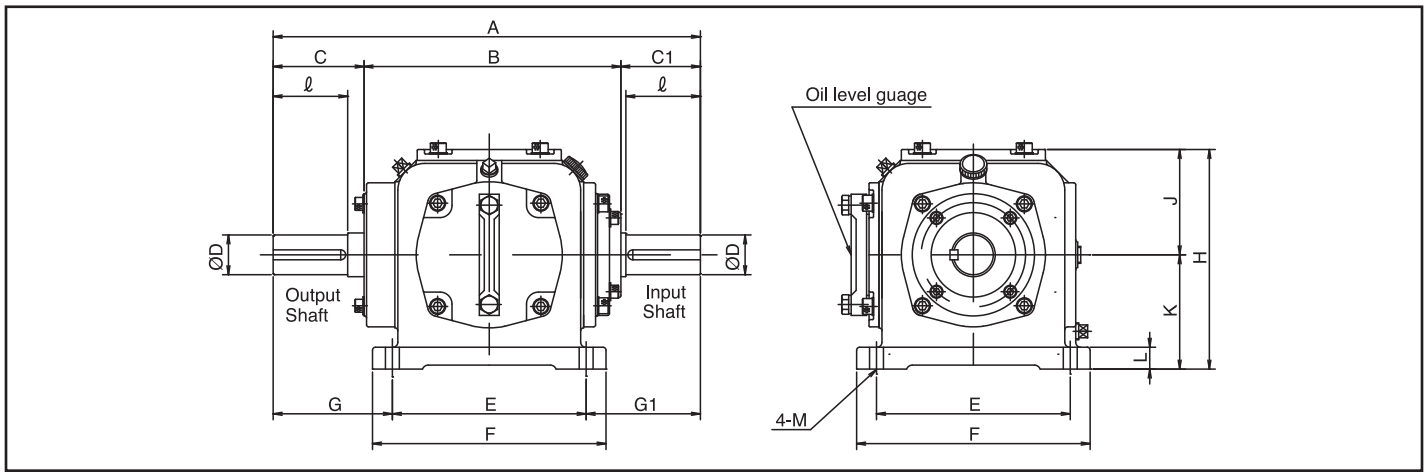

All dimensions in millimeters unless otherwise specified

Dimensions and Capacities

Model	Torque Capacity (N m)	Max. Overrun-ning (r/min) Output shaft	Max. Engaging (r/min)	A	B	C	C1	E	F	G	G1	H	J	K	L	M	N	P	Q	R	S	ℓ	D (m6)	Key	Wt. (kg)	Oil ℓ
OB 60-ON	314	0 ~ 3,000	0 ~ 1,800	300	200	55	45	152	190	77	71	174	84	90	20	14	–	–	–	–	–	40	25	8 x 7 x 34ℓ	15	1
OB 100-ON	1,620	0 ~ 2,500	0 ~ 1,800	430	258.5	91.5	80	195	235	120	115	221	106	115	22	14	–	–	–	–	–	75	40	12 x 8 x 67ℓ	45	2
OB 120-ON	3,140	0 ~ 1,800	0 ~ 1,500	605	355	130	120	290	340	160	155	328.5	153.5	175	32	21	–	–	–	–	–	115	50	14 x 9 x 106ℓ	90	7
OB 140-ON	5,880	0 ~ 1,500	0 ~ 1,000	670	400	140	130	330	390	175	165	368.5	168.5	200	40	25	–	–	–	–	–	125	60	18 x 11 x 114ℓ	150	10

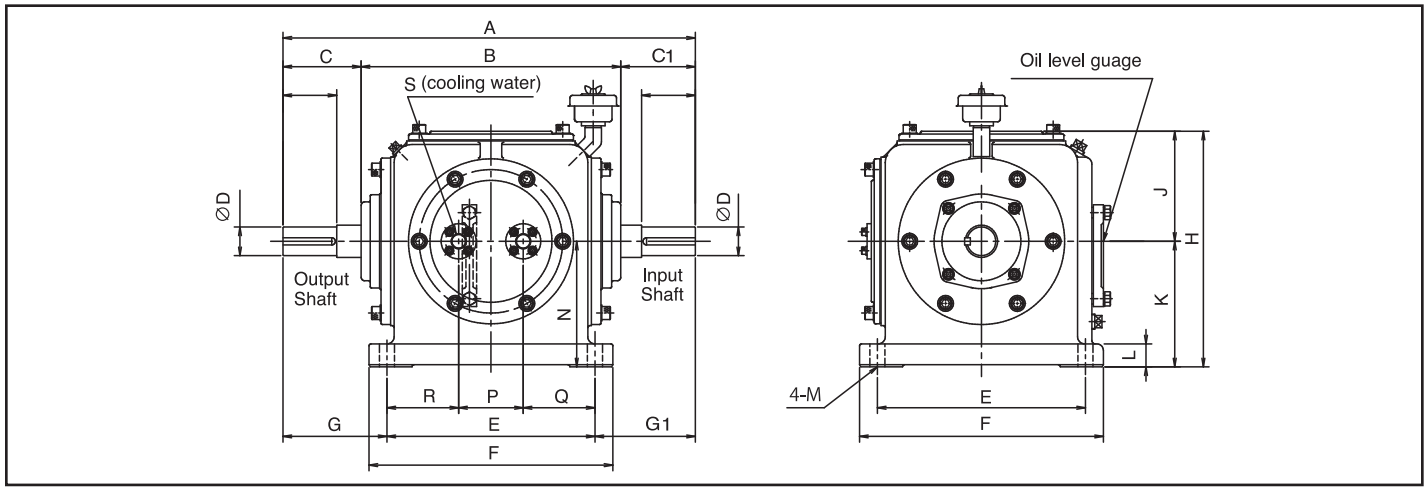

All dimensions in millimeters unless otherwise specified

Dimensions and Capacities

Model	Torque Capacity (N m)	Max. Over-running (r/min) Output shaft	Max. Engag-ing (r/min)	A	B	C	C1	E	F	G	G1	H	J	K	L	M	N	P	Q	R	S	ℓ	D (m6)	Key	Wt. (kg)	Oil ℓ	Cooling Water (ℓ/min)
OB 60-OF	314	0 ~ 3,600	0 ~ 3,600	360	258.5	56.5	45	195	235	85	80	221	106	115	22	14	130	75	60	60	Rc3/8	40	25	8 x 7 x 34ℓ	21	2	3
OB 100-OF	1,620	0 ~ 3,600	0 ~ 3,600	538	360	89	89	290	340	124	124	328.5	153.5	175	32	19	86.5	110	90	90	Rc1/2	75	40	12 x 8 x 67ℓ	90	7	3
OB 120-OF	3,140	0 ~ 3,600	0 ~ 3,600	644	355	147	142	290	340	177	177	328.5	153.5	175	32	19	86.5	110	90	90	Rc1/2	115	50	14 x 9 x 106ℓ	90	7	3
OB 140-OF	5,880	0 ~ 3,000	0 ~ 2,000	670	400	140	130	330	390	175	165	368.5	168.5	200	40	25	220	140	95	95	Rc1/2	125	60	18 x 11 x 114ℓ	150	10	3

OB SERIES SF CAM CLUTCH BOX

Features:

- Continuous high speed overrunning
- High-speed engagement
- Optimal durability with minimal maintenance

Tsubaki OB-SF Series Cam Clutch Box is intended for use in applications that require continuous high-speed overrunning along with high-speed engagement. Induced draft fans, dual drive fans, and energy recovery systems are ideal applications. Substantial energy savings can be realized with the addition of a Cam Clutch Box to reduce electrical usage of a primary drive motor. The OB-SF version of Tsubaki's Cam Clutch Box provides liquid cooling with a labyrinth seal for optimal durability and reduced maintenance requirement.

Example How to Order Code: Example Model Number for OB Series Cam Clutch Box

OB	180	SF
Series	Frame Size	Applicable Lubrication System
OB: Overrunning Cam Clutch Box	120	**SF:** Liquid cooling, screw pump & impeller lubrication, labyrinth seal
	140	
	150	
	160	
	180	
	200	
	200	

Please contact Tsubaki for additional sizes, specifications and options.

CAM CLUTCH BOX

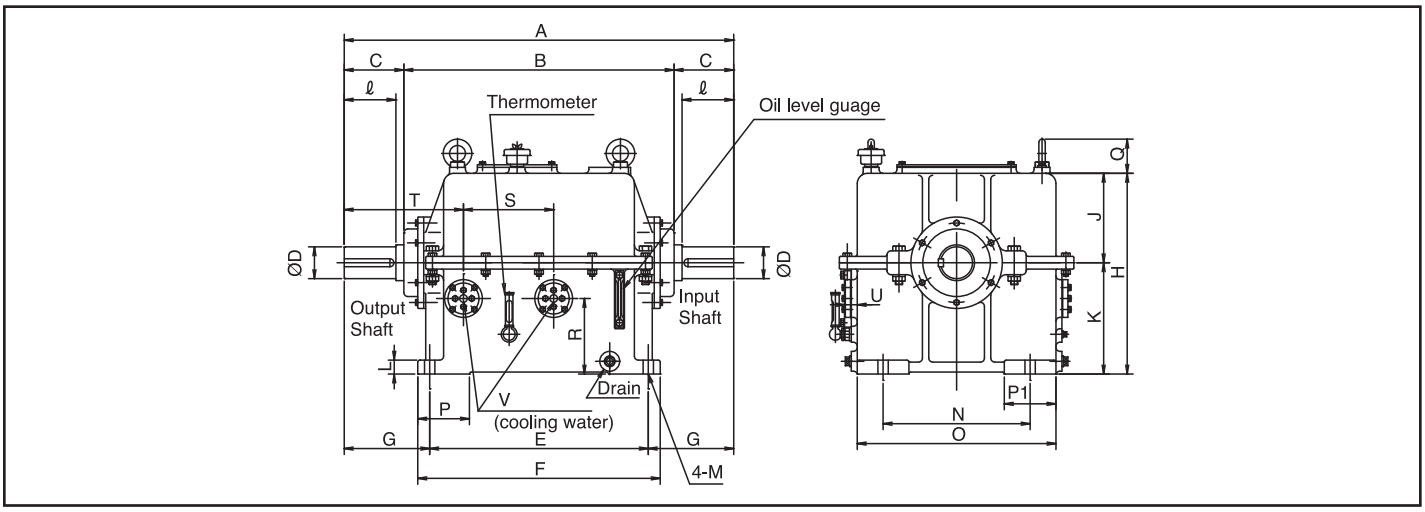

All dimensions in millimeters unless otherwise specified

Dimensions and Capacities

Model	Torque Capacity (N m)	Max. Overrunning (rpm) Output shaft	Max. Engaging (rpm)	A	B	C	E	F	G	H	J	K	L	M
OB 120-SF	3,140	500 - 3,150	500 - 3,150	880	680	100	550	610	165	505	225	280	35	26
OB 140-SF	5,880	500 - 3,000	500 - 3,000	940	680	130	550	610	195	505	225	280	35	26
OB 150-SF	9,500	500 - 2,400	500 - 2,400	980	680	150	550	610	215	505	225	280	35	26
OB 160-SF	17,600	500 - 1,800	500 - 1,800	1,070	750	160	610	670	230	550	250	300	40	28
OB 180-SF	24,500	400 - 1,500	400 - 1,500	1,160	800	180	660	730	250	655	300	355	45	32
OB 200-SF	40,180	400 - 1,200	400 - 1,200	1,620	1,000	310	840	910	390	700	320	380	45	33
OB 200W-SF	80,360	400 - 1,000	400 - 1,000	1,620	1,000	310	840	910	390	700	320	380	45	33

Dimensions and Capacities

Model	N	O	P	P1	Q	R	S	T	U	V	ℓ	D (m6)	Key	Mass (kg)	Oil ℓ	Cooling Water (ℓ/min)
OB 120-SF	370	500	130	130	86	190	227	250	30	Rc1/2	80	60	18x11x66	460	30	10
OB 140-SF	370	500	130	130	86	190	227	280	30	Rc1/2	110	70	20x12x952	480	30	10
OB 150-SF	370	500	130	130	86	190	227	300	30	Rc1/2	130	80	22x14x114	500	30	10
OB 160-SF	400	550	150	185	86	190	227	326	30	Rc1/2	140	100	28x16x121	650	35	10
OB 180-SF	450	610	180	205	105	255	265	349	30	Rc1/2	160	120	32x18x139	800	45	10
OB 200-SF	550	710	B5	-	105	245	265	610	30	Rc1/2	290	155	40x22x265	1190	71	12
OB 200W-SF	550	710	85	-	105	245	265	610	30	Rc1/2	290	155	40x22x265	1240	71	12

MIUS SERIES CAM CLUTCH

MIUS Series Cam Clutch units are designed for indexing applications. In this mode of operation, reciprocating motion applied to the driving race of the clutch is transformed into uni-directional intermittent motion, at the driven race. The clutch drives in the forward stroke (index) and overruns on the return stroke. In addition to torque capacity, consider the number of indexing cycles per minute.

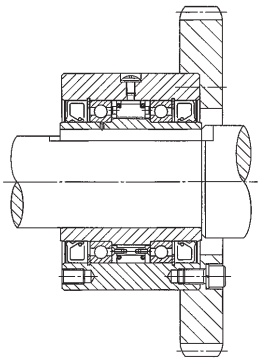

Available Bore Range

MIUS Series Cam Clutches are stocked in many bore sizes. Requested bore size and keyway combination are possible on a made-to-order basis. Chart below provides the available range of bore sizes per a given model.

Model	Range Inner Diameter inch (mm)	
MIUS300	0.500 to 0.750 inch	(12.70 to 19.05 mm)
MIUS400	0.437 to 0.866 inch	(11.10 to 22.23 mm)
MIUS500	0.750 to 1.312 inch	(19.05 to 33.32 mm)
MIUS600	0.937 to 2.000 inch	(23.80 to 50.80 mm)
MIUS700	1.875 to 2.938 inch	(47.62 to 74.61 mm)
MIUS750	2.250 to 3.437 inch	(57.15 to 87.30 mm)
MIUS800	2.625 to 4.438 inch	(66.68 to 112.71 mm)
MIUS900	3.625 to 5.438 inch	(92.08 to 138.11 mm)
MIUS1000	4.938 to 7.000 inch	(125.41 to 177.80 mm)

Example How To Order Code: MIUS Series Cam Clutch

MIUS	500	-	1B
Series	Frame Size		Bore Symbol
MIUS: Indexing with inner and outer race overrunning	300	-	H
			15
			J
			L
	400	-	H
			J
			18
			L
			P
			20
	500	-	P
			1
			1B

The bore sizes listed below are standards.
Special bore sizes are available upon request.

Specifications

Bore Size in.	Bore Size (mm)	Bore Keyseat	Torque Capacity lb.ft	Torque Capacity (Nm)
0.500	(12.70)	1/8 x 1/16"	280	(380)
0.590	(15)	5 X 2.3 mm		
0.625	(15.88)	3/16 x 3/32"		
0.750	(19.05)	3/16 x 3/32"		
0.500	(12.70)	1/8 x 1/16"	398	(539)
0.625	(15.88)	3/16 x 3/32"		
0.708	(18)	6 x 2.8 mm		
0.750	(19.05)	3/16 x 3/32"		
0.875	(22.23)	3/16 x 1/16"		
0.787	(20)	6 x 2.8 mm		
0.875	(22.23)	3/16 x 3/32"	1195	(1620)
1.000	(25.40)	1/4 x 1/8"		
1.125	(28.58)	1/4 x 1/8"		

MIUS SERIES CAM CLUTCH

Example How To Order Code: MIUS Series Cam Clutch

MIUS	600	-	1F

Series	Frame Size		Bore Symbol
MIUS: Indexing with inner and outer race overrunning	500	-	30
			1D
			1E
	600	-	1D
			1F
			1H
			40
			1J
			45
			1L
			1R
			50
			2
	700	-	1R
			50
			2
			55
			2D
			60
			2G
			2H
			65
			2L
			70
			2R
	750	-	2G
			2H
			65
			2L
			70
			2R
			75
			3
			80
			3D
	800	-	3
			80
			3D
			85

The bore sizes listed below are standards.
Special bore sizes are available upon request.

Specifications				
Bore Size			Torque Capacity	
in.	(mm)	Bore Keyseat	lb.ft	(Nm)
1.181	(30)	10 x 3.3 mm	1195	(1620)
1.250	(31.75)	1/4 x 1/8"		
1.312	(33.34)	1/4 x 3/32"		
1.250	(31.75)	1/4 x 1/8"	2316	(3140)
1.375	(34.93)	3/8 x 3/16"		
1.500	(38.10)	3/8 x 3/16"		
1.574	(40)	12 x 3.3 mm		
1.625	(41.28)	3/8 x 3/16"		
1.771	(45)	14 x 3.8 mm		
1.750	(44.45)	3/8 x 3/16"		
1.938	(49.22)	3/8 x 3/16"		
1.968	(50)	14 x 3.8 mm		
2.000	(50.80)	3/8 X 1/8"		
1.938	(30.32)	1/2 x 1/4"	5163	(7000)
1.969	(50)	14 x 3.8 mm		
2.000	(50.8)	1/2 x 1/4"		
2.165	(55)	16 x 4.3 mm		
2.250	(57.15)	1/2 x 1/4"		
2.362	(60)	18 x 4.4 mm		
2.438	(61.92)	5/8 X 5/16"		
2.500	(63.50)	5/8 X 5/16"		
2.559	(65)	18 x 4.4 mm		
2.750	(69.85)	5/8 X 7/32"		
2.755	(70)	20 x 4.9 mm		
2.938	(74.62)	5/8 X 1/8"		
2.438	(61.92)	5/8 X 5/16"	7007	(9500)
2.500	(63.50)	5/8 X 5/16"		
2.559	(65)	18 x 4.4 mm		
2.750	(69.85)	5/8 X 5/16"		
2.755	(70)	20 x 4.9 mm		
2.938	(74.62)	3/4 X 3/8"		
2.952	(75)	20 x 4.9 mm		
3.000	(76.20)	3/4 X 3/8"		
3.149	(80)	22 x 5.4 mm		
3.250	(82.55)	3/4 X 1/4"		
3.000"	(76.20)	3/4 X 3/8"	13276	(18000)
3.149	(80)	22 x 5.4 mm		
3.250	(82.55)	3/4 X 3/8"		
3.346	(85)	22 x 5.4 mm		

MIUS SERIES CAM CLUTCH

Example How To Order Code: MIUS Series Cam Clutch

MIUS	800	-	3G

Series	Frame Size		Bore Symbol
MIUS: Indexing with inner and outer race overrunning	800	-	3G
			3H
			90
			3L
			100
			3R
			4
			4D
			110
			4G
	900	-	100
			4
			4D
			110
			4G
			4H
			120
			4L
			4R
			5
			130
			5D
			135
			5G
	1000	-	4R
			5
			130
			5D
			5G
			5H
			5L
			150
			5R
			6
			6D
			160
			6G
			6J
			6L
			6P
			175
			7

The bore sizes listed below are standards.
Special bore sizes are available upon request.

Specifications				
Bore Size			Torque Capacity	
in.	(mm)	Bore Keyseat	lb.ft	(Nm)
3.438	(87.32)	7/8 X 7/16"	13276	(18000)
3.500	(88.90)	7/8 X 7/16"		
3.543	(90)	22 x 5.4 mm		
3.750	(95.25)	7/8 X 7/16"		
3.937	(100)	28 x 6.4 mm		
3.938	(100.01)	1 X 1/2"		
4.000"	(101.6)	1 X 1/2"		
4.250	(107.95)	1 X 3/8"		
4.330	(110)	28 x 6.4 mm		
4.438	(112.71)	1 X 1/4"		
3.937	(100)	28 x 6.4 mm	18070	(24500)
4.000	(101.6)	1 X 1/2"		
4.250	(107.95)	1 X 1/2"		
4.330	(110)	28 x 6.4 mm		
4.438	(112.71)	1 X 1/2"		
4.500	(114.30)	1 X 1/2"		
4.724	(120)	32 x 7.4 mm		
4.750	(120.65)	1 X 1/2"		
4.938	(125.41)	1 X 3/8"		
5.000	(127.00)	1 X 3/8"		
5.118	(300)	32 x 7.4 mm		
5.250	(133.35)	1 X 1/4"		
5.314	(135)	32 x 7.4 mm		
5.438	(138.11)	1 X 1/4"		
4.938	(125.41)	1-1/4 X 5/8"	27290	(37000)
5.000	(127.00)	1-1/4 X 5/8"		
5.118	(130)	36 x 8.4 mm		
5.250	(133.35)	1-1/4 X 5/8"		
5.438	(138.11)	1-1/4 X 5/8"		
5.500	(139.70)	1-1/4 X 5/8"		
5.750	(146.05)	1-1/4 X 7/16"		
5.906	(150)	36 x 8.4 mm		
5.938	(150.81)	1-1/4 X 7/16"		
6.000	(152.40)	1-1/4 X 5/8"		
6.250	(158.75)	1-1/2 X 1/2"		
6.299	(160)	38 x 10		
6.438	(163.51)	1-1/4 X 3/8"		
6.625	(168.28)	1-1/2 X 1/2"		
6.750	(171.45)	1-1/2 X 1/2"		
6.875	(174.63)	1-1/2 X 1/2"		
6.889	(175)	45 x 10.4 mm		
7.000	(177.80)	1-1/2 X 7/16"		

MIUS SERIES CAM CLUTCH

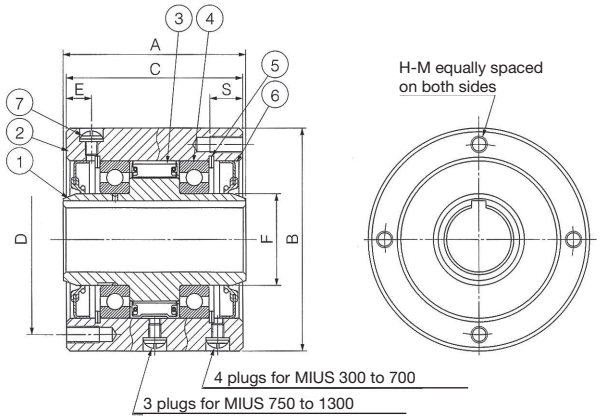

1 Inner race
2 Outer race
3 Cam cage assembly
4 Bearing
5 Spirolox
6 Oil seal
7 Lubrication filler plug

Additional information including shaft and bore tolerances are found in the Engineering section starting on page 92.

Dimensions and Capacities

Model	Max. Over-running (r/min) Inner Race	Max. Indexing (cycle/min	Drag Torque lb.ft. (Nm)	A in. (mm)	B in. (mm)	C in. (mm)	D PCD in. (mm)	E in. (mm)	F in. (mm)	S in. (mm)	H-M No. of Tapped Holes (Qt.) Thread	Oil Filler Plug Size × Pitch	Oil oz. (mℓ)	Weight lb. (kg)
MIUS300	50	300	0.229	2.50	3.000/2.998	2.380	2.625	0.409	1.122	0.512	(4) 1/4-28	M6 x P1.0	1.7	4.0
			(0.31)	(63.5)	(76.2/76.15)	(60.45)	(66.67)	(10.4)	(28.5)	(13)			(50)	(1.8)
MIUS400	50	300	0.280	2.750	3.500/3.498	2.690	2.875	0.421	1.248	0.630	(4) 5/16-24	M6 x P1.0	2.0	6.0
			(0.38)	(69.85)	(88.90/88.85)	(68.33)	(73.03)	(10.7)	(31.7)	(16)			(60)	(2.7)
MIUS500	50	300	0.502	3.500	4.250/4.248	3.375	3.625	0.484	1.748	0.630	(4) 5/16-24	M6 x P1.0	3.4	11.0
			(0.68)	(88.9)	(107.95/107.90)	(85.875)	(92.08)	(12.3)	(44.4)	(16)			(100)	(5)
MIUS600	30	300	1.136	3.750	5.375/5.373	3.630	4.750	0.503	2.748	0.630	(6) 5/16-24	M6 x P1.0	5.4	19.0
			(1.54)	(95.25)	(136.53/136.48)	(92.20)	(120.65)	(12.8)	(69.8)	(16)			(160)	(8.6)
MIUS700	30	300	1.940	5.000	7.125/7.123	4.880	6.250	0.780	3.996	0.787	(8) 3/8-24	M6 x P1.0	8.8	43.0
			(2.63)	(127)	(180.98/180.93)	(123.95)	(158.75)	(19.8)	(101.5)	(20)			(260)	(19.5)
MIUS750	30	300	3.039	6.000	8.750/8.748	5.880	7.000	2.940	4.330	0.984	(8) 1/2-20	M8 x P1.25	27.2	81.6
			(4.12)	(152.4)	(222.25/222.20)	(149.35)	(177.8)	(74.67)	(110)	(25)			(800)	(37)
MIUS800	20	300	6.144	6.000	10.000/9.998	5.880	8.940	2.940	5.512	0.984	(8) 1/2-20	M8 x P1.25	34.0	103
			(8.33)	(152.4)	(254.00/253.95)	(149.35)	(227.08)	(74.67)	(140)	(25)			(1000)	(46.5)
MIUS900	20	300	6.940	6.380	12.000/11.997	6.250	9.750	3.125	6.693	1.260	(10) 5/8-18	M8 x P1.25	42.2	155
			(9.41)	(162.052)	(304.80/304.72)	(158.75)	(247.65)	(79.38)	(170)	(32)			(1240)	(70.5)
MIUS1000	20	300	9.397	6.630	15.000/14.997	6.500	11.750	3.250	7.874	1.260	(12) 5/8-18	M8 x P1.25	57.8	239
			(12.74)	(168.402)	(381.00/380.92)	(165.10)	(298.45)	(82.55)	(200)	(32)			(1700)	(108.5)

MZEU SERIES CAM CLUTCH

MZEU Series is a general purpose Cam Clutch suitable for a wide variety of applications. A selection of add-on flanges and torque arms are available enabling this Cam Clutch to easily fit where custom designed products were previously required. MZEU12 to MZEU80 are pre-greased, requiring no lubrication. MZEU90 to MZEU150 require oil lubrication. Contact Tsubaki for indexing applications above 50 cycles per minute.

Example How to Order Code: MZEU Series Cam Clutch

MZEU	12	K	E1 – E2
Series	Size	Keyway Option	Mounting Options*
MZEU: General applications (Indexing, Overrunning and Backstopping)	12 15 20 25 30 35 40 45 50 55 60 70 80 90 100 130 150	**Blank:** Keyway on inner race only. No keyway on the outer race. **K:** Keyway on the outer race and keyway on inner race.	No Designator: Cam Clutch Only **E1:** Mounting Flange Style 1 **E2:** Mounting Flange Style 2 **E3:** Torque Arm Flange **E4:** End Cover Flange **E5:** Mounting Flange Style 5 **E7:** Mounting Flange Style 7

*Specifics and combinations of flanges are shown on the following pages.

Specifications

Bore Size	Torque Capacity lb.ft.	Torque Capacity (Nm)
12 mm	44	(60)
15 mm	74	(100)
20 mm	181	(245)
25 mm	313	(425)
30 mm	542	(735)
35 mm	749	(1015)
40 mm	996	(1350)
45 mm	1195	(1620)
50 mm	1527	(2070)
55 mm	1770	(2400)
60 mm	2176	(2950)
70 mm	3105	(4210)
80 mm	3813	(5170)
90 mm	8851	(12000)
100 mm	12981	(17600)
130 mm	18070	(24500)
150 mm	24930	(33800)

Shown below is a Basic MZEU Cam Clutch plus this same Cam Clutch outfitted with various combinations of available flanges and torque arms. These additional components are detailed in the following pages.

Basic type

Basic type with outer keyway

E1 flange + E2 flange

E2 flange + E3 torque arm

E3 torque arm + E4 cover

E5 flange + E5 flange

E2 flange + E7 flange

MZEU BASIC TYPE

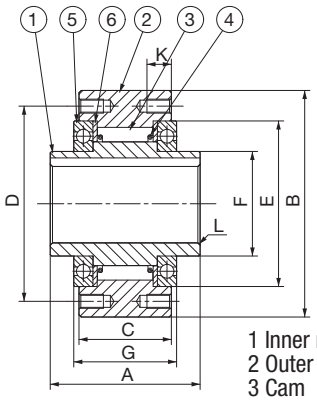

1 Inner race
2 Outer race
3 Cam

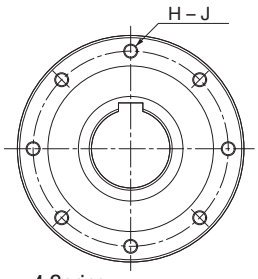

4 Spring
5 Bearing
6 Side plate

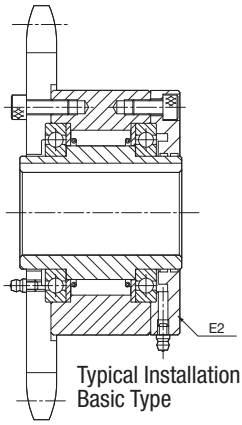

Typical Installation
Basic Type

Additional information including shaft and bore tolerances are found in the Engineering section starting on page 92.

Dimensions and Capacities

Model	Torque Capacity lb.ft. (Nm)	Overrunning Inner Race Max. r/min	Overrunning Outer Race Max. r/min	Drag Torque lb.ft. (Nm)	Bore Size in. (mm)	Inner Race Keyway (mm)	A in. (mm)	B in. (mm)	C in. (mm)	D PCD in. (mm)	E in. (mm)	F in. (mm)	G in. (mm)	H–J Qt. & tap	K in. (mm)	L in. (mm)	Weight lb. (kg)
MZEU12 (K)	44 (60)	2000	1000	0.1 (0.2)	0.472 (12)	4 x 1.8	1.654 (42)	2.441 (62)	0.787 (20)	2.008 (51)	1.654 (42)	0.787 (20)	1.063 (27)	3 – 5.5m	— (—)	0.031 (0.8)	1.1 (0.5)
MZEU15 (K)	74 (100)	1800	900	0.1 (0.2)	0.591 (15)	5 x 2.3	2.047 (52)	2.677 (68)	1.102 (28)	2.205 (56)	1.850 (47)	0.984 (25)	1.260 (32)	3 – M5	0.315 (8)	0.031 (0.8)	1.8 (0.8)
MZEU20 (K)	181 (245)	1600	700	0.2 (0.29)	0.787 (20)	6 x 2.8	2.244 (57)	2.953 (75)	1.339 (34)	2.520 (64)	2.165 (55)	1.181 (30)	1.535 (39)	4 – M5	0.315 (8)	0.031 (0.8)	2.6 (1.2)
MZEU25 (K)	313 (425)	1600	600	0.2 (0.33)	0.984 (25)	8 x 3.3	2.362 (60)	3.543 (90)	1.378 (35)	3.071 (78)	2.677 (68)	1.575 (40)	1.575 (40)	4 – M6	0.394 (10)	0.031 (0.8)	4.0 (1.8)
MZEU30 (K)	542 (735)	1500	500	0.3 (0.39)	1.181 (30)	8 x 3.3	2.677 (68)	3.937 (100)	1.693 (43)	3.425 (87)	2.953 (75)	1.772 (45)	1.890 (48)	6 – M6	0.394 (10)	0.039 (1.0)	5.7 (2.6)
MZEU35 (K)	749 (1015)	1400	300	0.4 (0.49)	1.378 (35)	10 x 3.3	2.913 (74)	4.331 (110)	1.772 (45)	3.780 (96)	3.150 (80)	1.969 (50)	2.008 (51)	6 – M6	0.472 (12)	0.039 (1.0)	7.0 (3.2)
MZEU40 (K)	996 (1350)	1400	300	0.4 (0.59)	1.575 (40)	12 x 3.3	3.386 (86)	4.921 (125)	2.087 (53)	4.252 (108)	3.543 (90)	2.165 (55)	2.323 (59)	6 – M8	0.551 (14)	0.051 (1.3)	10.6 (4.8)
MZEU45 (K)	1195 (1620)	1400	300	0.5 (0.69)	1.772 (45)	14 x 3.8	3.386 (86)	5.118 (130)	2.087 (53)	4.409 (112)	3.740 (95)	2.362 (60)	2.323 (59)	8 – M8	0.551 (14)	0.051 (1.3)	13.6 (6.2)
MZEU50 (K)	1527 (2070)	1300	250	0.6 (0.79)	1.969 (50)	14 x 3.8	3.701 (94)	5.906 (150)	2.520 (64)	5.197 (132)	4.331 (110)	2.756 (70)	2.835 (72)	8 – M8	0.551 (14)	0.051 (1.3)	18.0 (8.2)
MZEU55 (K)	1770 (2400)	1300	250	0.6 (0.88)	2.165 (55)	16 x 4.3	4.094 (104)	6.299 (160)	2.598 (66)	5.433 (138)	4.528 (115)	2.953 (75)	2.835 (72)	8 – M10	0.630 (16)	0.059 (1.5)	20.9 (9.5)
MZEU60 (K)	2176 (2950)	1200	250	0.7 (0.98)	2.362 (60)	18 x 4.4	4.488 (114)	6.693 (170)	3.071 (78)	5.906 (150)	4.921 (125)	3.150 (80)	3.504 (89)	10 – M10	0.630 (16)	0.059 (1.5)	27.1 (12.3)
MZEU70 (K)	3105 (4210)	1100	250	0.9 (1.27)	2.756 (70)	20 x 4.9	5.276 (134)	7.480 (190)	3.740 (95)	6.496 (165)	5.512 (140)	3.543 (90)	4.252 (108)	10 – M10	0.630 (16)	0.071 (1.8)	39.8 (18.1)
MZEU80 (K)	3813 (5170)	800	200	1.0 (1.38)	3.150 (80)	22 x 5.4	5.669 (144)	8.268 (210)	3.937 (100)	7.283 (185)	6.299 (160)	4.134 (105)	4.252 (108)	10 – M10	0.630 (16)	0.071 (1.8)	50.8 (23.1)
MZEU90 (K)	8851 (12000)	450	150	3.5 (4.70)	3.543 (90)	25 x 5.4	6.220 (158)	9.055 (230)	4.528 (115)	8.110 (206)	7.087 (180)	4.724 (120)	4.921 (125)	10 – M12	0.787 (20)	0.079 (2.0)	61.8 (28.1)
MZEU100 (K)	12981 (17600)	400	130	4.0 (5.39)	3.937 (100)	28 x 6.4	7.165 (182)	10.630 (270)	4.724 (120)	9.449 (240)	8.268 (210)	5.512 (140)	5.157 (131)	10 – M16	0.945 (24)	0.079 (2.0)	102 (46.3)
MZEU130 (K)	18070 (24500)	320	110	5.0 (6.76)	5.118 (130)	32 x 7.4	8.346 (212)	12.205 (310)	5.984 (152)	10.945 (278)	9.449 (240)	6.299 (160)	6.614 (168)	12 – M16	0.945 (24)	0.098 (2.5)	154 (70.2)
MZEU150 (K)	24930 (33800)	240	80	6.0 (8.13)	5.906 (150)	36 x 8.4	9.685 (246)	15.748 (400)	7.087 (180)	14.173 (360)	12.205 (310)	7.874 (200)	7.638 (194)	12 – M20	1.260 (32)	0.098 (2.5)	322 (146.3)

MZEU E1 FLANGE + E2 FLANGE

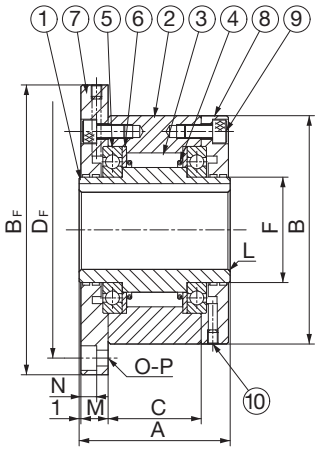

1 Inner race
2 Outer race
3 Cam
4 Spring
5 Bearing
6 Side plate
7 E1 Flange
8 E2 Flange
9 Sprocket bolt
10 Set screw

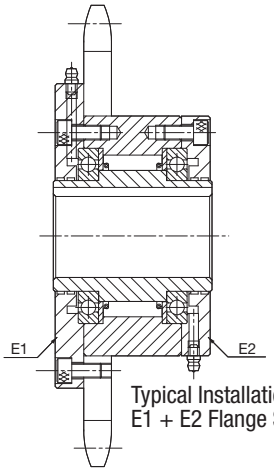

Typical Installation
E1 + E2 Flange Set

Additional information including shaft and bore tolerances are found in the Engineering section starting on page 92.

Dimensions and Capacities

Model	Torque Capacity lb.ft. (Nm)	Overrunning Inner Race Max. r/min	Overrunning Outer Race Max. r/min	Drag Torque lb.ft. (Nm)	Bore Size in. (mm)	Inner Race Keyway (mm)	A in. (mm)	B in. (mm)	BF in. (mm)	C in. (mm)	DF in. (mm)	F in. (mm)	L in. (mm)	M in. (mm)	N in. (mm)	O-P Qt. & tap	Weight lb. (kg)
MZEU12 (K) E1+E2	44 (60)	2000	1000	0.15 (0.20)	0.472 (12)	4 x 1.8	1.654 (42)	2.441 (62)	3.346 (85)	0.787 (20)	2.835 (72)	0.787 (20)	0.031 (0.8)	0.394 (10)	0.224 (5.7)	3 – 5.5	2.4 (1.1)
MZEU15 (K) E1+E2	74 (100)	1800	900	0.15 (0.20)	0.591 (15)	5 x 2.3	2.047 (52)	2.677 (68)	3.622 (92)	1.102 (28)	3.071 (78)	0.984 (25)	0.031 (0.8)	0.433 (11)	0.224 (5.7)	3 – 5.5	3.3 (1.5)
MZEU20 (K) E1+E2	181 (245)	1600	700	0.21 (0.29)	0.787 (20)	6 x 2.8	2.244 (57)	2.953 (75)	3.858 (98)	1.339 (34)	3.346 (85)	1.181 (30)	0.031 (0.8)	0.413 (10.5)	0.224 (5.7)	4 – 5.5	4.2 (1.9)
MZEU25 (K) E1+E2	313 (425)	1600	600	0.24 (0.33)	0.984 (25)	8 x 3.3	2.362 (60)	3.543 (90)	4.646 (118)	1.378 (35)	4.094 (104)	1.575 (40)	0.031 (0.8)	0.453 (11.5)	0.268 (6.8)	4 – 6.6	6.4 (2.9)
MZEU30 (K) E1+E2	542 (735)	1500	500	0.29 (0.39)	1.181 (30)	8 x 3.3	2.677 (68)	3.937 (100)	5.039 (128)	1.693 (43)	4.488 (114)	1.772 (45)	0.039 (1.0)	0.453 (11.5)	0.268 (6.8)	6 – 6.6	8.8 (4)
MZEU35 (K) E1+E2	749 (1015)	1400	300	0.36 (0.49)	1.378 (35)	10 x 3.3	2.913 (74)	4.331 (110)	5.512 (140)	1.772 (45)	4.882 (124)	1.969 (50)	0.039 (1.0)	0.531 (13.5)	0.268 (6.8)	6 – 6.6	11.4 (5.2)
MZEU40 (K) E1+E2	996 (1350)	1400	300	0.44 (0.59)	1.575 (40)	12 x 3.3	3.386 (86)	4.921 (125)	6.299 (160)	2.087 (53)	5.591 (142)	2.165 (55)	0.051 (1.3)	0.610 (15.5)	0.354 (9)	6 – 9.0	17.4 (7.9)
MZEU45 (K) E1+E2	1195 (1620)	1400	300	0.51 (0.69)	1.772 (45)	14 x 3.8	3.386 (86)	5.118 (130)	6.496 (165)	2.087 (53)	5.748 (146)	2.362 (60)	0.051 (1.3)	0.610 (15.5)	0.354 (9)	8 – 9.0	20.5 (9.3)
MZEU50 (K) E1+E2	1527 (2070)	1300	250	0.58 (0.79)	1.969 (50)	14 x 3.8	3.701 (94)	5.906 (150)	7.283 (185)	2.520 (64)	6.535 (166)	2.756 (70)	0.051 (1.3)	0.551 (14)	0.354 (9)	8 – 9.0	25.7 (11.7)
MZEU55 (K) E1+E2	1770 (2400)	1300	250	0.65 (0.88)	2.165 (55)	16 x 4.3	4.094 (104)	6.299 (160)	8.031 (204)	2.598 (66)	7.165 (182)	2.953 (75)	0.059 (1.5)	0.709 (18)	0.433 (11)	8 – 011.0	33.7 (15.3)
MZEU60 (K) E1+E2	2176 (2950)	1200	250	0.72 (0.98)	2.362 (60)	18 x 4.4	4.488 (114)	6.693 (170)	8.425 (214)	3.071 (78)	7.559 (192)	3.150 (80)	0.059 (1.5)	0.669 (17)	0.433 (11)	10 – 11.0	38.9 (17.7)
MZEU70 (K) E1+E2	3105 (4210)	1100	250	0.94 (1.27)	2.756 (70)	20 x 4.9	5.276 (134)	7.480 (190)	9.213 (234)	3.740 (95)	8.346 (212)	3.543 (90)	0.071 (1.8)	0.728 (18.5)	0.433 (11)	10 – 11.0	56.1 (25.5)
MZEU80 (K) E1+E2	3813 (5170)	800	200	1.02 (1.38)	3.150 (80)	22 x 5.4	5.669 (144)	8.268 (210)	10.000 (254)	3.937 (100)	9.134 (232)	4.134 (105)	0.071 (1.8)	0.827 (21)	0.433 (11)	10 – 11.0	73.0 (33.2)
MZEU90 (K) E1+E2	8851 (12000)	450	150	3.47 (4.70)	3.543 (90)	25 x 5.4	6.220 (158)	9.055 (230)	10.945 (278)	4.528 (115)	10.000 (254)	4.724 (120)	0.079 (2.0)	0.807 (20.5)	0.512 (13)	10 – 14.0	84.3 (38.3)
MZEU100 (K) E1+E2	12981 (17600)	400	130	3.98 (5.39)	3.937 (100)	28 x 6.4	7.165 (182)	10.630 (270)	13.189 (335)	4.724 (120)	12.008 (305)	5.512 (140)	0.079 (2.0)	1.181 (30)	0.689 (17.5)	10 – 18.0	151 (68.8)
MZEU130 (K) E1+E2	18070 (24500)	320	110	4.99 (6.76)	5.118 (130)	32 x 7.4	8.346 (212)	12.205 (310)	14.961 (380)	5.984 (152)	13.583 (345)	6.299 (160)	0.098 (2.5)	1.142 (29)	0.689 (17.5)	12 – 18.0	216 (98.2)
MZEU150 (K) E1+E2	24930 (33800)	240	80	6.00 (8.13)	5.906 (150)	36 x 8.4	9.685 (246)	15.748 (400)	19.094 (485)	7.087 (180)	17.520 (445)	7.874 (200)	0.098 (2.5)	1.260 (32)	0.846 (21.5)	12 – 22.0	436 (198.2)

MZEU E2 FLANGE + E3 TORQUE ARM

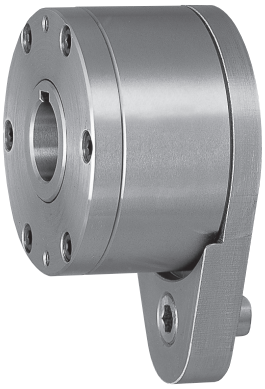

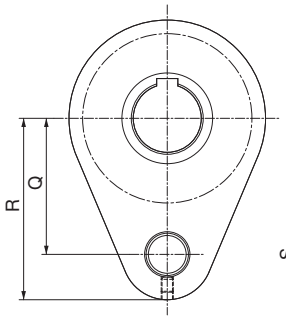

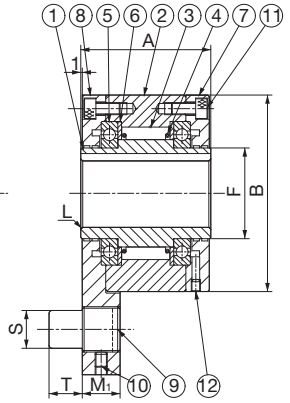

1 Inner race
2 Outer race
3 Cam
4 Spring
5 Bearing
6 Side plate
7 E2 Flange
8 E3 Torque arm
9 Pin
10 Set screw
11 Socket bolt
12 Set screw

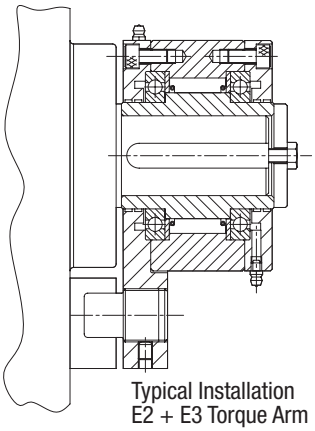

Typical Installation
E2 + E3 Torque Arm

Additional information including shaft and bore tolerances are found in the Engineering section starting on page 92.

Dimensions and Capacities

Model	Torque Capacity lb.ft. (Nm)	Overrunning Inner Race Max. r/min	Overrunning Outer Race Max. r/min	Drag Torque lb.ft. (Nm)	Bore Size in. (mm)	Inner Race Keyway (mm)	A in. (mm)	B in. (mm)	F in. (mm)	L in. (mm)	M1 in. (mm)	Q in. (mm)	R in. (mm)	S in. (mm)	T in. (mm)	Weight lb. (kg)
MZEU12 (K) E2+E3	44 (60)	2000	1000	0.15 (0.20)	0.472 (12)	4 x 1.8	1.654 (42)	2.441 (62)	0.787 (20)	0.031 (0.8)	0.531 (13.5)	1.732 (44)	2.323 (59)	0.394 (10)	0.394 (10)	2.2 (1.0)
MZEU15 (K) E2+E3	74 (100)	1800	900	0.15 (0.20)	0.591 (15)	5 x 2.3	2.047 (52)	2.677 (68)	0.984 (25)	0.031 (0.8)	0.531 (13.5)	1.850 (47)	2.441 (62)	0.394 (10)	0.394 (10)	3.1 (1.4)
MZEU20 (K) E2+E3	181 (245)	1600	700	0.21 (0.29)	0.787 (20)	6 x 2.8	2.244 (57)	2.953 (75)	1.181 (30)	0.031 (0.8)	0.591 (15)	2.126 (54)	2.835 (72)	0.472 (12)	0.433 (11)	4.0 (1.8)
MZEU25 (K) E2+E3	313 (425)	1600	600	0.24 (0.33)	0.984 (25)	8 x 3.3	2.362 (60)	3.543 (90)	1.575 (40)	0.031 (0.8)	0.748 (19)	2.441 (62)	3.307 (84)	0.630 (16)	0.551 (14)	5.9 (2.7)
MZEU30 (K) E2+E3	542 (735)	1500	500	0.29 (0.39)	1.181 (30)	8 x 3.3	2.677 (68)	3.937 (100)	1.772 (45)	0.039 (1.0)	0.748 (19)	2.677 (68)	3.622 (92)	0.630 (16)	0.551 (14)	9.0 (4.1)
MZEU35 (K) E2+E3	749 (1015)	1400	300	0.36 (0.49)	1.378 (35)	10 x 3.3	2.913 (74)	4.331 (110)	1.969 (50)	0.039 (1.0)	0.866 (22)	2.992 (76)	4.016 (102)	0.787 (20)	0.709 (18)	11.2 (5.1)
MZEU40 (K) E2+E3	996 (1350)	1400	300	0.44 (0.59)	1.575 (40)	12 x 3.3	3.386 (86)	4.921 (125)	2.165 (55)	0.051 (1.3)	0.866 (22)	3.346 (85)	4.409 (112)	0.787 (20)	0.709 (18)	16.3 (7.4)
MZEU45 (K) E2+E3	1195 (1620)	1400	300	0.51 (0.69)	1.772 (45)	14 x 3.8	3.386 (86)	5.118 (130)	2.362 (60)	0.051 (1.3)	0.984 (25)	3.543 (90)	4.724 (120)	0.984 (25)	0.866 (22)	20.0 (9.1)
MZEU50 (K) E2+E3	1527 (2070)	1300	250	0.58 (0.79)	1.969 (50)	14 x 3.8	3.701 (94)	5.906 (150)	2.756 (70)	0.051 (1.3)	0.984 (25)	4.016 (102)	5.315 (135)	0.984 (25)	0.866 (22)	25.5 (11.6)
MZEU55 (K) E2+E3	1770 (2400)	1300	250	0.65 (0.88)	2.165 (55)	16 x 4.3	4.094 (104)	6.299 (160)	2.953 (75)	0.059 (1.5)	1.181 (30)	4.252 (108)	5.591 (142)	1.260 (32)	0.984 (25)	32.1 (14.6)
MZEU60 (K) E2+E3	2176 (2950)	1200	250	0.72 (0.98)	2.362 (60)	18 x 4.4	4.488 (114)	6.693 (170)	3.150 (80)	0.059 (1.5)	1.181 (30)	4.409 (112)	5.709 (145)	1.260 (32)	0.984 (25)	37.4 (17.0)
MZEU70 (K) E2+E3	3105 (4210)	1100	250	0.94 (1.27)	2.756 (70)	20 x 4.9	5.276 (134)	7.480 (190)	3.543 (90)	0.071 (1.8)	1.378 (35)	5.315 (135)	6.890 (175)	1.496 (38)	1.181 (30)	55.9 (25.4)
MZEU80 (K) E2+E3	3813 (5170)	800	200	1.02 (1.38)	3.150 (80)	22 x 5.4	5.669 (144)	8.268 (210)	4.134 (105)	0.071 (1.8)	1.378 (35)	5.709 (145)	7.283 (185)	1.496 (38)	1.181 (30)	71.7 (32.6)
MZEU90 (K) E2+E3	8851 (12000)	450	150	3.47 (4.70)	3.543 (90)	25 x 5.4	6.220 (158)	9.055 (230)	4.724 (120)	0.079 (2.0)	1.772 (45)	6.102 (155)	8.071 (205)	1.969 (50)	1.575 (40)	85.6 (38.9)
MZEU100 (K) E2+E3	12981 (17600)	400	130	3.98 (5.39)	3.937 (100)	28 x 6.4	7.165 (182)	10.630 (270)	5.512 (140)	0.079 (2.0)	1.772 (45)	7.087 (180)	9.055 (230)	1.969 (50)	1.575 (40)	143 (65.2)
MZEU130 (K) E2+E3	18070 (24500)	320	110	4.99 (6.76)	5.118 (130)	32 x 7.4	8.346 (212)	12.205 (310)	6.299 (160)	0.098 (2.5)	2.362 (60)	8.071 (205)	10.551 (268)	2.677 (68)	2.165 (55)	214 (97.3)
MZEU150 (K) E2+E3	24930 (33800)	240	80	6.00 (8.13)	5.906 (150)	36 x 8.4	9.685 (246)	15.748 (400)	7.874 (200)	0.098 (2.5)	2.362 (60)	10.039 (255)	12.795 (325)	2.677 (68)	2.165 (55)	421 (191.4)

MZEU E3 TORQUE ARM + E4 COVER

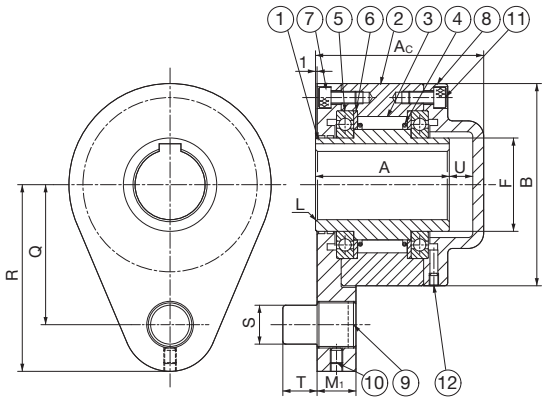

1 Inner race
2 Outer race
3 Cam
4 Spring
5 Bearing
6 Side plate
7 E3 torque arm
8 E4 cover
9 Pin
10 Set screw
11 Hollow hex bolt
12 Set screw

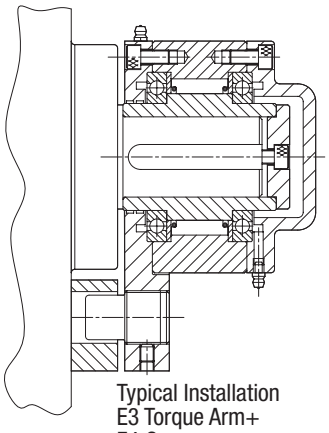

Typical Installation
E3 Torque Arm+
E4 Cover

Additional information including shaft and bore tolerances are found in the Engineering section starting on page 92.

Dimensions and Capacities

Model	Torque Capacity lb.ft. (Nm)	Overrunning Inner Race Max. r/min	Overrunning Outer Race Max. r/min	Drag Torque lb.ft. (Nm)	Bore Size in. (mm)	Inner Race Keyway (mm)	A in. (mm)	Ac in. (mm)	B in. (mm)	F in. (mm)	L in. (mm)	M1 in. (mm)	Q in. (mm)	R in. (mm)	S in. (mm)	T in. (mm)	U in. (mm)	Weight lb. (kg)
MZEU12 (K) E3+E4	44 (60)	2000	1000	0.15 (0.20)	0.472 (12)	4 x 1.8	1.654 (42)	2.087 (53)	2.441 (62)	0.787 (20)	0.031 (0.8)	0.531 (13.5)	1.732 (44)	2.323 (59)	0.394 (10)	0.394 (10)	0.236 (6)	2.2 (1.0)
MZEU15 (K) E3+E4	74 (100)	1800	900	0.15 (0.20)	0.591 (15)	5 x 2.3	2.047 (52)	2.677 (68)	2.677 (68)	0.984 (25)	0.031 (0.8)	0.531 (13.5)	1.850 (47)	2.441 (62)	0.394 (10)	0.394 (10)	0.394 (10)	3.3 (1.5)
MZEU20 (K) E3+E4	181 (245)	1600	700	0.21 (0.29)	0.787 (20)	6 x 2.8	2.244 (57)	2.874 (73)	2.953 (75)	1.181 (30)	0.031 (0.8)	0.591 (15)	2.126 (54)	2.835 (72)	0.472 (12)	0.433 (11)	0.394 (10)	4.4 (2.0)
MZEU25 (K) E3+E4	313 (425)	1600	600	0.24 (0.33)	0.984 (25)	8 x 3.3	2.362 (60)	2.992 (76)	3.543 (90)	1.575 (40)	0.031 (0.8)	0.748 (19)	2.441 (62)	3.307 (84)	0.630 (16)	0.551 (14)	0.394 (10)	6.4 (2.9)
MZEU30 (K) E3+E4	542 (735)	1500	500	0.29 (0.39)	1.181 (30)	8 x 3.3	2.677 (68)	3.307 (84)	3.937 (100)	1.772 (45)	0.039 (1.0)	0.748 (19)	2.677 (68)	3.622 (92)	0.630 (16)	0.551 (14)	0.394 (10)	9.5 (4.3)
MZEU35 (K) E3+E4	749 (1015)	1400	300	0.36 (0.49)	1.378 (35)	10 x 3.3	2.913 (74)	3.622 (92)	4.331 (110)	1.969 (50)	0.039 (1.0)	0.866 (22)	2.992 (76)	4.016 (102)	0.787 (20)	0.709 (18)	0.472 (12)	11.7 (5.3)
MZEU40 (K) E3+E4	996 (1350)	1400	300	0.44 (0.59)	1.575 (40)	12 x 3.3	3.386 (86)	4.134 (105)	4.921 (125)	2.165 (55)	0.051 (1.3)	0.866 (22)	3.346 (85)	4.409 (112)	0.787 (20)	0.709 (18)	0.472 (12)	17.2 (7.8)
MZEU45 (K) E3+E4	1195 (1620)	1400	300	0.51 (0.69)	1.772 (45)	14 x 3.8	3.386 (86)	4.252 (108)	5.118 (130)	2.362 (60)	0.051 (1.3)	0.984 (25)	3.543 (90)	4.724 (120)	0.984 (25)	0.866 (22)	0.591 (15)	21.1 (9.6)
MZEU50 (K) E3+E4	1527 (2070)	1300	250	0.58 (0.79)	1.969 (50)	14 x 3.8	3.701 (94)	4.449 (113)	5.906 (150)	2.756 (70)	0.051 (1.3)	0.984 (25)	4.016 (102)	5.315 (135)	0.984 (25)	0.866 (22)	0.472 (12)	26.6 (12.1)
MZEU55 (K) E3+E4	1770 (2400)	1300	250	0.65 (0.88)	2.165 (55)	16 x 4.3	4.094 (104)	4.961 (126)	6.299 (160)	2.953 (75)	0.059 (1.5)	1.181 (30)	4.252 (108)	5.591 (142)	1.260 (32)	0.984 (25)	0.591 (15)	33.4 (15.2)
MZEU60 (K) E3+E4	2176 (2950)	1200	250	0.72 (0.98)	2.362 (60)	18 x 4.4	4.488 (114)	5.394 (137)	6.693 (170)	3.150 (80)	0.059 (1.5)	1.181 (30)	4.409 (112)	5.709 (145)	1.260 (32)	0.984 (25)	0.591 (15)	38.9 (17.7)
MZEU70 (K) E3+E4	3105 (4210)	1100	250	0.94 (1.27)	2.756 (70)	20 x 4.9	5.276 (134)	6.476 (164.5)	7.480 (190)	3.543 (90)	0.071 (1.8)	1.378 (35)	5.315 (135)	6.890 (175)	1.496 (38)	1.181 (30)	0.886 (22.5)	58.3 (26.5)
MZEU80 (K) E3+E4	3813 (5170)	800	200	1.02 (1.38)	3.150 (80)	22 x 5.4	5.669 (144)	6.614 (168)	8.268 (210)	4.134 (105)	0.071 (1.8)	1.378 (35)	5.709 (145)	7.283 (185)	1.496 (38)	1.181 (30)	0.630 (16)	73.9 (33.6)
MZEU90 (K) E3+E4	8851 (12000)	550	150	2.77 (3.76)	3.543 (90)	25 x 5.4	6.220 (158)	7.559 (192)	9.055 (230)	4.724 (120)	0.079 (2.0)	1.772 (45)	6.102 (155)	8.071 (205)	1.969 (50)	1.575 (40)	1.063 (27)	85.8 (39.0)
MZEU100 (K) E3+E4	12981 (17600)	500	130	3.18 (4.31)	3.937 (100)	28 x 6.4	7.165 (182)	8.543 (217)	10.630 (270)	5.512 (140)	0.079 (2.0)	1.772 (45)	7.087 (180)	9.055 (230)	1.969 (50)	1.575 (40)	1.102 (28)	148.3 (67.4)
MZEU130 (K) E3+E4	18070 (24500)	400	110	3.98 (5.39)	5.118 (130)	32 x 7.4	8.346 (212)	9.843 (250)	12.205 (310)	6.299 (160)	0.098 (2.5)	2.362 (60)	8.071 (205)	10.551 (268)	2.677 (68)	2.165 (55)	1.181 (30)	220.4 (100.2)
MZEU150 (K) E3+E4	24930 (33800)	300	80	4.77 (6.47)	5.906 (150)	36 x 8.4	9.685 (246)	11.260 (286)	15.748 (400)	7.874 (200)	0.098 (2.5)	2.362 (60)	10.039 (255)	12.795 (325)	2.677 (68)	2.165 (55)	1.260 (32)	428.6 (194.8)

MZEU E5 FLANGE + E5 FLANGE

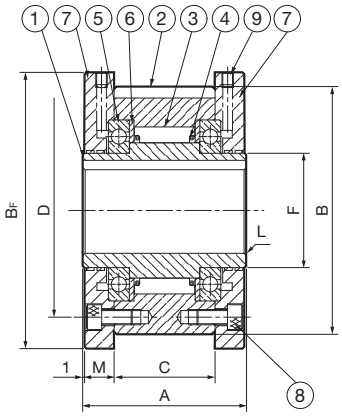

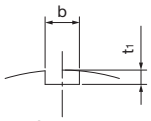

1 Inner race
2 Outer race
3 Cam
4 Spring
5 Bearing
6 Side plate
7 E5 flange
8 Hex socket cap bolt
9 Set screw

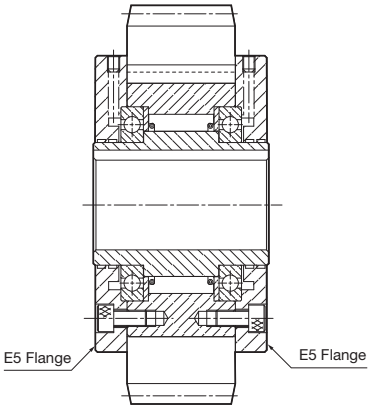

Typical Installation E5 Flange + E5 Flange

Additional information including shaft and bore tolerances are found in the Engineering section starting on page 92.

Dimensions and Capacities

Model	Torque Capacity lb.ft. (Nm)	Overrunning Inner Race Max. r/min	Overrunning Outer Race Max. r/min	Drag Torque lb.ft. (Nm)	Bore Size in. (mm)	Inner Race Keyway (mm)	A in. (mm)	B in. (mm)	BF in. (mm)	C in. (mm)	D PCD in. (mm)	F in. (mm)	L in. (mm)	M in. (mm)	b in. (mm)	t1 in. (mm)	Weight lb. (kg)
MZEU12K E5+E5	44 (60)	2000	1000	0.15 (0.20)	0.472 (12)	4 x 1.8	1.654 (42)	2.441 (62)	2.756 (70)	0.787 (20)	2.008 (51)	0.787 (20)	0.031 (0.8)	0.394 (10)	0.157 (4)	0.098 (2.5)	1.1 (0.5)
MZEU15K E5+E5	74 (100)	1800	900	0.15 (0.20)	0.591 (15)	5 x 2.3	2.047 (52)	2.677 (68)	2.992 (76)	1.102 (28)	2.205 (56)	0.984 (25)	0.031 (0.8)	0.433 (11)	0.197 (5)	0.118 (3)	1.8 (0.8)
MZEU20K E5+E5	181 (245)	1600	700	0.21 (0.29)	0.787 (20)	6 x 2.8	2.244 (57)	2.953 (75)	3.307 (84)	1.339 (34)	2.520 (64)	1.181 (30)	0.031 (0.8)	0.413 (10.5)	0.236 (6)	0.138 (3.5)	2.6 (1.2)
MZEU25K E5+E5	313 (425)	1600	600	0.24 (0.33)	0.984 (25)	8 x 3.3	2.362 (60)	3.543 (90)	3.898 (99)	1.378 (35)	3.071 (78)	1.575 (40)	0.031 (0.8)	0.453 (11.5)	0.315 (8)	0.157 (4)	4.0 (1.8)
MZEU30K E5+E5	542 (735)	1500	500	0.29 (0.39)	1.181 (30)	8 x 3.3	2.677 (68)	3.937 (100)	4.291 (109)	1.693 (43)	3.425 (87)	1.772 (45)	0.039 (1.0)	0.453 (11.5)	0.315 (8)	0.157 (4)	5.7 (2.6)
MZEU35K E5+E5	749 (1015)	1400	300	0.36 (0.49)	1.378 (35)	10 x 3.3	2.913 (74)	4.331 (110)	4.685 (119)	1.772 (45)	3.780 (96)	1.969 (50)	0.039 (1.0)	0.531 (13.5)	0.394 (10)	0.197 (5)	7.0 (3.2)
MZEU40K E5+E5	996 (1350)	1400	300	0.44 (0.59)	1.575 (40)	12 x 3.3	3.386 (86)	4.921 (125)	5.315 (135)	2.087 (53)	4.252 (108)	2.165 (55)	0.051 (1.3)	0.610 (15.5)	0.472 (12)	0.197 (5)	10.6 (4.8)
MZEU45K E5+E5	1195 (1620)	1400	300	0.51 (0.69)	1.772 (45)	14 x 3.8	3.386 (86)	5.118 (130)	5.512 (140)	2.087 (53)	4.409 (112)	2.362 (60)	0.051 (1.3)	0.610 (15.5)	0.551 (14)	0.217 (5.5)	13.6 (6.2)
MZEU50K E5+E5	1527 (2070)	1300	250	0.58 (0.79)	1.969 (50)	14 x 3.8	3.701 (94)	5.906 (150)	6.299 (160)	2.520 (64)	5.197 (132)	2.756 (70)	0.051 (1.3)	0.551 (14)	0.551 (14)	0.217 (5.5)	18.0 (8.2)
MZEU55K E5+E5	1770 (2400)	1300	250	0.65 (0.88)	2.165 (55)	16 x 4.3	4.094 (104)	6.299 (160)	6.693 (170)	2.598 (66)	5.433 (138)	2.953 (75)	0.059 (1.5)	0.709 (18)	0.630 (16)	0.236 (6)	20.9 (9.5)
MZEU60K E5+E5	2176 (2950)	1200	250	0.72 (0.98)	2.362 (60)	18 x 4.4	4.488 (114)	6.693 (170)	7.165 (182)	3.071 (78)	5.906 (150)	3.150 (80)	0.059 (1.5)	0.669 (17)	0.709 (18)	0.276 (7)	27.1 (12.3)
MZEU70K E5+E5	3105 (4210)	1100	250	0.94 (1.27)	2.756 (70)	20 x 4.9	5.276 (134)	7.480 (190)	7.953 (202)	3.740 (95)	6.496 (165)	3.543 (90)	0.071 (1.8)	0.728 (18.5)	0.787 (20)	0.295 (7.5)	39.8 (18.1)
MZEU80K E5+E5	3813 (5170)	800	200	1.02 (1.38)	3.150 (80)	22 x 5.4	5.669 (144)	8.268 (210)	8.740 (222)	3.937 (100)	7.283 (185)	4.134 (105)	0.071 (1.8)	0.827 (21)	0.866 (22)	0.354 (9)	50.8 (23.1)
MZEU90K E5+E5	8851 (12000)	450	150	3.47 (4.70)	3.543 (90)	25 x 5.4	6.220 (158)	9.055 (230)	9.528 (242)	4.528 (115)	8.110 (206)	4.724 (120)	0.079 (2.0)	0.807 (20.5)	0.984 (25)	0.354 (9)	61.8 (28.1)
MZEU100K E5+E5	12981 (17600)	400	130	3.98 (5.39)	3.937 (100)	28 x 6.4	7.165 (182)	10.630 (270)	11.102 (282)	4.724 (120)	9.449 (240)	5.512 (140)	0.079 (2.0)	1.181 (30)	1.102 (28)	0.394 (10)	102 (46.3)
MZEU130K E5+E5	18070 (24500)	320	110	4.99 (6.76)	5.118 (130)	32 x 7.4	8.346 (212)	12.205 (310)	12.677 (322)	5.984 (152)	10.945 (278)	6.299 (160)	0.098 (2.5)	1.142 (29)	1.260 (32)	0.433 (11)	154 (70.2)
MZEU150K E5+E5	24930 (33800)	240	80	6.00 (8.13)	5.906 (150)	36 x 8.4	9.685 (246)	15.748 (400)	16.220 (412)	7.087 (180)	14.173 (360)	7.874 (200)	0.098 (2.5)	1.260 (32)	1.417 (36)	0.472 (12)	322 (146.3)

MZEU E2 FLANGE + E7 FLANGE

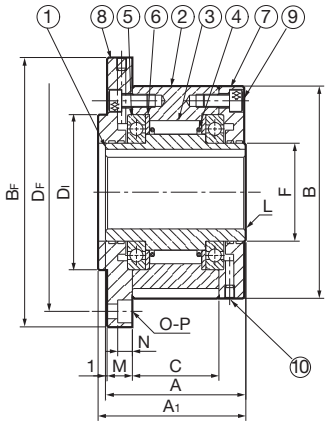

1 Inner race
2 Outer race
3 Cam
4 Spring
5 Bearing
6 Side plate
7 E2 Flange
8 E7 Flange
9 Hex socket cap bolt
10 Set screw

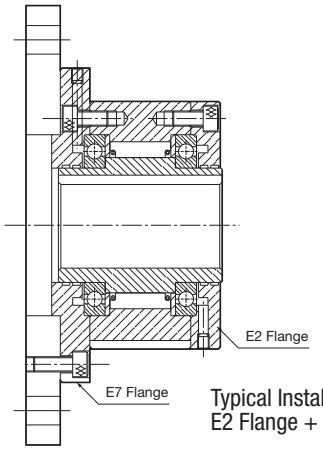

Typical Installation
E2 Flange + E7 Flange

Additional information including shaft and bore tolerances are found in the Engineering section starting on page 92.

Dimensions and Capacities

Model	Torque Capacity lb.ft. (Nm)	Overrunning Inner Race Max. r/min	Overrunning Outer Race Max. r/min	Drag Torque lb.ft. (Nm)	Bore Size in. (mm)	Inner Race Keyway (mm)	A in. (mm)	A1 in. (mm)	B in. (mm)	BF in. (mm)	C in. (mm)	D1 h7 in. (mm)	DF in. (mm)	F in. (mm)	L in. (mm)	M in. (mm)	N in. (mm)	O-P Qt. & tap	Weight lb. (kg)
MZEU12 (K) E2+E7	44 (60)	2000	1000	0.15 (0.20)	0.472 (12)	4 x 1.8	1.654 (42)	1.732 (44)	2.441 (62)	3.346 (85)	0.787 (20)	1.654 (42)	2.835 (72)	0.787 (20)	0.031 (0.8)	0.394 (10)	0.224 (5.7)	3 – 5.5	1.1 (0.5)
MZEU15 (K) E2+E7	74 (100)	1800	900	0.15 (0.20)	0.591 (15)	5 x 2.3	2.047 (52)	2.126 (54)	2.677 (68)	3.622 (92)	1.102 (28)	1.850 (47)	3.071 (78)	0.984 (25)	0.031 (0.8)	0.433 (11)	0.224 (5.7)	3 – 5.5	1.8 (0.8)
MZEU20 (K) E2+E7	181 (245)	1600	700	0.21 (0.29)	0.787 (20)	6 x 2.8	2.244 (57)	2.323 (59)	2.953 (75)	3.858 (98)	1.339 (34)	2.165 (55)	3.346 (85)	1.181 (30)	0.031 (0.8)	0.413 (10.5)	0.224 (5.7)	4 – 5.5	2.6 (1.2)
MZEU25 (K) E2+E7	313 (425)	1600	600	0.24 (0.33)	0.984 (25)	8 x 3.3	2.362 (60)	2.441 (62)	3.543 (90)	4.646 (118)	1.378 (35)	2.677 (68)	4.094 (104)	1.575 (40)	0.031 (0.8)	0.453 (11.5)	0.268 (6.8)	4 – 6.6	4.0 (1.8)
MZEU30 (K) E2+E7	542 (735)	1500	500	0.29 (0.39)	1.181 (30)	8 x 3.3	2.677 (68)	2.756 (70)	3.937 (100)	5.039 (128)	1.693 (43)	2.953 (75)	4.488 (114)	1.772 (45)	0.039 (1.0)	0.453 (11.5)	0.268 (6.8)	6 – 6.6	5.7 (2.6)
MZEU35 (K) E2+E7	749 (1015)	1400	300	0.36 (0.49)	1.378 (35)	10 x 3.3	2.913 (74)	2.992 (76)	4.331 (110)	5.512 (140)	1.772 (45)	3.150 (80)	4.882 (124)	1.969 (50)	0.039 (1.0)	0.512 (13)	0.268 (6.8)	6 – 6.6	7.0 (3.2)
MZEU40 (K) E2+E7	996 (1350)	1400	300	0.44 (0.59)	1.575 (40)	12 x 3.3	3.386 (86)	3.465 (88)	4.921 (125)	6.299 (160)	2.087 (53)	3.543 (90)	5.591 (142)	2.165 (55)	0.051 (1.3)	0.591 (15)	0.354 (9)	6 – 9.0	10.6 (4.8)
MZEU45 (K) E2+E7	1195 (1620)	1400	300	0.51 (0.69)	1.772 (45)	14 x 3.8	3.386 (86)	3.465 (88)	5.118 (130)	6.496 (165)	2.087 (53)	3.740 (95)	5.748 (146)	2.362 (60)	0.051 (1.3)	0.591 (15)	0.354 (9)	8 – 9.0	13.6 (6.2)
MZEU50 (K) E2+E7	1527 (2070)	1300	250	0.58 (0.79)	1.969 (50)	14 x 3.8	3.701 (94)	3.780 (96)	5.906 (150)	7.283 (185)	2.520 (64)	4.331 (110)	6.535 (166)	2.756 (70)	0.051 (1.3)	0.512 (13)	0.354 (9)	8 – 9.0	18.0 (8.2)
MZEU55 (K) E2+E7	1770 (2400)	1300	250	0.65 (0.88)	2.165 (55)	16 x 4.3	4.094 (104)	4.173 (106)	6.299 (160)	8.031 (204)	2.598 (66)	4.528 (115)	7.165 (182)	2.953 (75)	0.059 (1.5)	0.669 (17)	0.433 (11)	8 – 11.0	20.9 (9.5)
MZEU60 (K) E2+E7	2176 (2950)	1200	250	0.72 (0.98)	2.362 (60)	18 x 4.4	4.488 (114)	4.567 (116)	6.693 (170)	8.425 (214)	3.071 (78)	4.921 (125)	7.559 (192)	3.150 (80)	0.059 (1.5)	0.630 (16)	0.433 (11)	10 – 11.0	27.1 (12.3)
MZEU70 (K) E2+E7	3105 (4210)	1100	250	0.94 (1.27)	2.756 (70)	20 x 4.9	5.276 (134)	5.354 (136)	7.480 (190)	9.213 (234)	3.740 (95)	5.512 (140)	8.346 (212)	3.543 (90)	0.071 (1.8)	0.689 (17.5)	0.433 (11)	10 – 11.0	39.8 (18.1)
MZEU80 (K) E2+E7	3813 (5170)	800	200	1.02 (1.38)	3.150 (80)	22 x 5.4	5.669 (144)	5.748 (146)	8.268 (210)	10.000 (254)	3.937 (100)	6.299 (160)	9.134 (232)	4.134 (105)	0.071 (1.8)	0.787 (20)	0.433 (11)	10 – 11.0	50.8 (23.1)
MZEU90 (K) E2+E7	8851 (12000)	450	150	3.47 (4.70)	3.543 (90)	25 x 5.4	6.220 (158)	6.299 (160)	9.055 (230)	10.945 (278)	4.528 (115)	7.087 (180)	10.000 (254)	4.724 (120)	0.079 (2.0)	0.748 (19)	0.512 (13)	10 – 14.0	61.8 (28.1)
MZEU100 (K) E2+E7	12981 (17600)	400	130	3.98 (5.39)	3.937 (100)	28 x 6.4	7.165 (182)	7.244 (184)	10.630 (270)	13.189 (335)	4.724 (120)	8.268 (210)	12.008 (305)	5.512 (140)	0.079 (2.0)	1.102 (28)	0.689 (17.5)	10 – 18.0	102 (46.3)
MZEU130 (K) E2+E7	18070 (24500)	320	110	4.99 (6.76)	5.118 (130)	32 x 7.4	8.346 (212)	8.425 (214)	12.205 (310)	14.961 (380)	5.984 (152)	9.449 (240)	13.583 (345)	6.299 (160)	0.098 (2.5)	1.063 (27)	0.689 (17.5)	12 – 18.0	154 (70.2)
MZEU150 (K) E2+E7	24930 (33800)	240	80	6.00 (8.13)	5.906 (150)	36 x 8.4	9.685 (246)	9.764 (248)	15.748 (400)	19.094 (485)	7.087 (180)	12.205 (310)	17.520 (445)	7.874 (200)	0.098 (2.5)	1.181 (30)	0.846 (21.5)	12 – 22.0	322 (146.3)

BREU SERIES CAM CLUTCH

The BREU Series Cam Clutch is commonly used in backstopping applications that require higher speed inner race overrunning, and low to medium speed engagement speed capability. The BREU Series Cam Clutch is popular amongst both OEM's and end users, utilizing a broad array of mounting accessories and the ability to select keyway positions on the inner and outer race to offer mounting flexibility. BREU Series incorporates a "lift off" style cam which provides increased Cam Clutch life, please see page 11 for additional details. BREU Series Cam Clutch ships pre-lubricated with grease.

Example How to Order Code: BREU Series Cam Clutch

BREU	80	K	E1–E2
Series	Size	Keyway Option	Mounting Options*
BREU: Overruninng and backstop type	30 35 40 45 50 55 60 70 80 90 100 130 150	**Blank:** Keyway on inner race only. No keyway on the outer race. **K:** Keyway on the outer race and keyway on inner race.	No Designator: Cam Clutch Only **E1:** Mounting Flange Style 1 **E2:** Mounting Flange Style 2 **E3:** Torque Arm Flange **E4:** End Cover Flange **E5:** Mounting Flange Style 5 **E7:** Mounting Flange Style 7

*Specifics and combinations of flanges are shown on the following pages.

Specifications

	Torque Capacity		Inner Race Overrunning		Engagement
Bore Size	lb.ft.	(Nm)	Min. r/min	Max. r/min	Max. r/min
30 mm	448	(607)	880	3600	350
35 mm	506	(686)	780	3600	300
40 mm	723	(980)	720	3600	300
45 mm	795	(1078)	670	3600	280
50 mm	1,265	(1715)	610	3600	240
55 mm	1,446	(1960)	580	3600	220
60 mm	2,566	(3479)	490	3600	200
70 mm	3,492	(4735)	480	3600	200
80 mm	4,807	(6517)	450	3600	190
90 mm	6,288	(8526)	420	3000	180
100 mm	10,481	(14210)	460	2500	180
130 mm	15,034	(20384)	420	2200	180
150 mm	25,009	(33908)	370	1300	180

Shown below is a BREU Cam Clutch plus this same Cam Clutch outfitted with various combinations of available flanges and torque arms. These additional components are detailed in the following pages.

Basic type

Basic type with outer keyway

E1 flange + E2 flange

E2 flange + E3 torque arm

E3 torque arm + E4 cover

E5 flange + E5 flange

E2 flange + E7 flange

BREU BASIC TYPE

Basic type

Basic type with outer keyway

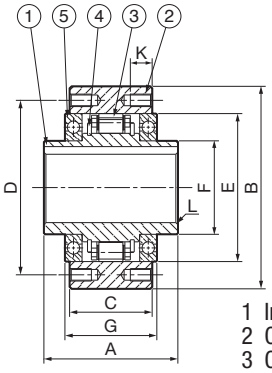

BREU Basic Type

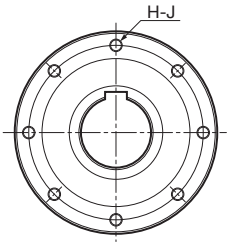

1 Inner race
2 Outer race
3 Cam
4 Spring
5 Bearing

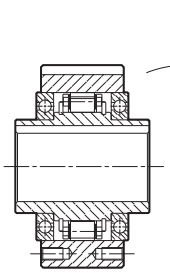

BREU-K Series

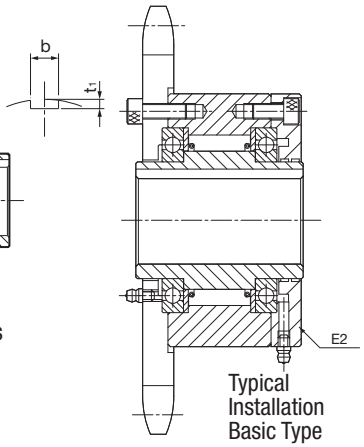

Typical Installation Basic Type

Additional information including shaft and bore tolerances are found in the Engineering section starting on page 92.

Dimensions and Capacities

Model	Bore Size in. (mm)	Inner Race Keyway (mm)	A in. (mm)	B in. (mm)	C in. (mm)	D PCD in. (mm)	E in. (mm)	F in. (mm)	G in. (mm)	H–J Qt. & tap	K in. (mm)	L Chamfer in. (mm)	b in. (mm)	t_1 in. (mm)	Weight lb. (kg)
BREU30 (K)	1.181	8 x 3.3	2.992	3.937	2.008	3.425	2.953	1.772	2.205	6 – M6	0.394	0.039	0.315	0.157	5.9
	(30)		(76)	(100)	(51)	(87)	(75)	(45)	(56)		(10)	(1.0)	(8)	(4.0)	(2.7)
BRUE35 (K)	1.378	10 x 3.3	3.110	4.331	1.969	3.780	3.150	1.969	2.205	6 – M6	0.472	0.039	0.394	0.197	7.0
	(35)		(79)	(110)	(50)	(96)	(80)	(50)	(56)		(12)	(1.0)	(10)	(5.0)	(3.2)
BREU40 (K)	1.575	12 x 3.3	3.386	4.921	2.087	4.252	3.543	2.165	2.323	6 – M8	0.551	0.051	0.472	0.197	9.7
	(40)		(86)	(125)	(53)	(108)	(90)	(55)	(59)		(14)	(1.3)	(12)	(5.0)	(4.4)
BREU45 (K)	1.772	14 x 3.8	3.386	5.118	2.087	4.409	3.740	2.362	2.323	8 – M8	0.551	0.051	0.551	0.217	10.3
	(45)		(86)	(130)	(53)	(112)	(95)	(60)	(59)		(14)	(1.3)	(14)	(5.5)	(4.7)
BREU50 (K)	1.969	14 x 3.8	3.701	5.906	2.520	5.197	4.331	2.756	2.835	8 – M8	0.551	0.051	0.551	0.217	16.7
	(50)		(94)	(150)	(64)	(132)	(110)	(70)	(72)		(14)	(1.3)	(14)	(5.5)	(7.6)
BREU55 (K)	2.165	16 x 4.3	4.094	6.299	2.598	5.433	4.528	2.953	2.835	8 – M10	0.630	0.059	0.630	0.236	19.6
	(55)		(104)	(160)	(66)	(138)	(115)	(75)	(72)		(16)	(1.5)	(16)	(6.0)	(8.9)
BREU60 (K)	2.362	18 x 4.4	4.724	6.693	3.307	5.906	4.921	3.150	3.740	10 – M10	0.630	0.059	0.709	0.276	27.5
	(60)		(120)	(170)	(84)	(150)	(125)	(80)	(95)		(16)	(1.5)	(18)	(7.0)	(12.5)
BREU70 (K)	2.756	20 x 4.9	5.276	7.480	3.740	6.496	5.512	3.543	4.252	10 – M10	0.630	0.071	0.787	0.295	37.8
	(70)		(134)	(190)	(95)	(165)	(140)	(90)	(108)		(16)	(1.8)	(20)	(7.5)	(17.2)
BREU80 (K)	3.150	22 x 5.4	5.669	8.268	3.937	7.283	6.299	4.134	4.252	10 – M10	0.630	0.071	0.866	0.354	49.3
	(80)		(144)	(210)	(100)	(185)	(160)	(105)	(108)		(16)	(1.8)	(22)	(9.0)	(22.4)
BREU90 (K)	3.543	25 x 5.4	6.220	9.055	4.528	8.110	7.087	4.724	4.921	10 – M12	0.787	0.079	0.984	0.354	66.7
	(90)		(158)	(230)	(115)	(206)	(180)	(120)	(125)		(20)	(2.0)	(25)	(9.0)	(30.3)
BREU100 (K)	3.937	28 x 6.4	7.323	10.630	4.882	9.449	8.268	5.512	5.315	10 – M16	0.945	0.079	1.102	0.394	100.1
	(100)		(186)	(270)	(124)	(240)	(210)	(140)	(135)		(24)	(2.0)	(28)	(10.0)	(45.5)
BREU130 (K)	5.118	32 x 7.4	8.346	12.205	5.984	10.945	9.449	6.299	6.614	12 – M16	0.945	0.098	1.260	0.433	146.6
	(130)		(212)	(310)	(152)	(278)	(240)	(160)	(168)		(24)	(2.5)	(32)	(11.0)	(67.0)
BREU150 (K)	5.906	36 x 8.4	9.685	15.748	7.087	14.173	12.205	7.874	7.638	12 – M20	1.260	0.098	1.417	0.472	319.0
	(150)		(246)	(400)	(180)	(360)	(310)	(200)	(194)		(32)	(2.5)	(36)	(12.0)	(145)

BREU E1 FLANGE + E2 FLANGE

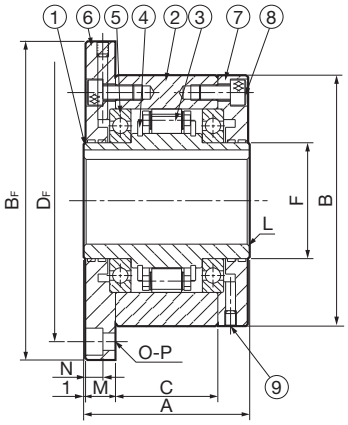

1 Inner race
2 Outer race
3 Cam cage
4 Snap ring
5 Bearing
6 E1 Flange
7 E2 Flange
8 Hex socket cap bolt
9 Set screw

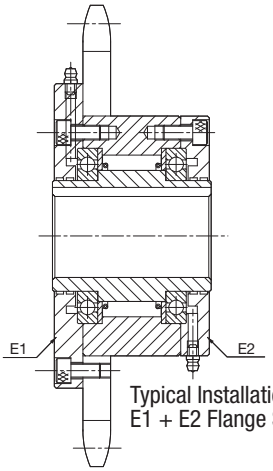

Typical Installation
E1 + E2 Flange Set

Additional information including shaft and bore tolerances are found in the Engineering section starting on page 92.

Dimensions and Capacities

Model	Bore Size in. (mm)	Inner Race Keyway (mm)	A in. (mm)	B in. (mm)	B_F in. (mm)	C in. (mm)	D_F in. (mm)	F in. (mm)	L Chamfer in. (mm)	M in. (mm)	N in. (mm)	O-P Qt & Hole (mm)	Weight lb. (kg)
BREU30 (K) E1 + E2	1.181	8 x 3.3	2.992	3.937	5.039	2.008	4.488	1.772	0.039	0.453	0.268	6-6.6	9.0
	(30)		(76)	(100)	(128)	(51)	(114)	(45)	(1.0)	(11.5)	(6.8)		(4.1)
BRUE35 (K) E1 + E2	1.378	10 x 3.3	3.110	4.331	5.512	1.969	4.882	1.969	0.039	0.531	0.268	6-6.6	11.4
	(35)		(79)	(110)	(140)	(50)	(124)	(50)	(1.0)	(13.5)	(6.8)		(5.2)
BREU40 (K) E1 + E2	1.575	12 x 3.3	3.386	4.921	6.299	2.087	5.591	2.165	0.051	0.610	0.354	6-9.0	16.5
	(40)		(86)	(125)	(160)	(53)	(142)	(55)	(1.3)	(15.5)	(9.0)		(7.5)
BREU45 (K) E1 + E2	1.772	14 x 3.8	3.386	5.118	6.496	2.087	5.748	2.362	0.051	0.610	0.354	8-9.0	17.4
	(45)		(86)	(130)	(165)	(53)	(146)	(60)	(1.3)	(15.5)	(9.0)		(7.9)
BREU50 (K) E1 + E2	1.969	14 x 3.8	3.701	5.906	7.283	2.520	6.535	2.756	0.051	0.551	0.354	8-9.0	24.4
	(50)		(94)	(150)	(185)	(64)	(166)	(70)	(1.3)	(14)	(9.0)		(11)
BREU55 (K) E1 + E2	2.165	16 x 4.3	4.094	6.299	8.031	2.598	7.165	2.953	0.059	0.709	0.433	8-11.0	32.3
	(55)		(104)	(160)	(204)	(66)	(182)	(75)	(1.5)	(18)	(11)		(15)
BREU60 (K) E1 + E2	2.362	18 x 4.4	4.724	6.693	8.425	3.307	7.559	3.150	0.059	0.669	0.433	10-11.0	39.4
	(60)		(120)	(170)	(214)	(84)	(192)	(80)	(1.5)	(17)	(11)		(18)
BREU70 (K) E1 + E2	2.756	20 x 4.9	5.276	7.480	9.213	3.740	8.346	3.543	0.071	0.728	0.433	10-11.0	54
	(70)		(134)	(190)	(234)	(95)	(212)	(90)	(1.8)	(18.5)	(11)		(25)
BREU80 (K) E1 + E2	3.150	22 x 5.4	5.669	8.268	10.000	3.937	9.134	4.134	0.071	0.827	0.433	10-11.0	72
	(80)		(144)	(210)	(254)	(100)	(232)	(105)	(1.8)	(21)	(11)		(33)
BREU90 (K) E1 + E2	3.543	25 x 5.4	6.220	9.055	10.945	4.528	10.000	4.724	0.079	0.807	0.512	10-14.0	89
	(90)		(158)	(230)	(278)	(115)	(254)	(120)	(2.0)	(20.5)	(13)		(41)
BREU100 (K) E1 + E2	3.937	28 x 6.4	7.323	10.630	13.189	4.882	12.008	5.512	0.079	1.181	0.689	10-18.0	150
	(100)		(186)	(270)	(335)	(124)	(305)	(140)	(2.0)	(30)	(17.5)		(68)
BREU130 (K) E1 + E2	5.118	32 x 7.4	8.346	12.205	14.961	5.984	13.583	6.299	0.098	1.142	0.689	12-18.0	209
	(130)		(212)	(310)	(380)	(152)	(345)	(160)	(2.5)	(29)	(17.5)		(95)
BREU150 (K) E1 + E2	5.906	36 x 8.4	9.685	15.748	19.094	7.087	17.520	7.874	0.098	1.260	0.846	12-22.0	433
	(150)		(246)	(400)	(485)	(180)	(445)	(200)	(2.5)	(32)	(21.5)		(197)

By installing E1 flange and E2 flange on the opposite side, the direction of rotation can be changed.

BREU E2 FLANGE + E3 TORQUE ARM

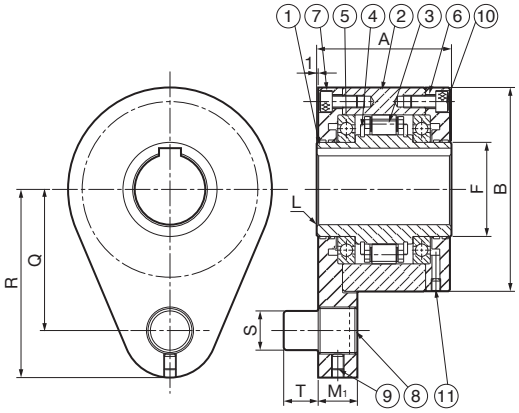

1 Inner race
2 Outer race
3 Cam cage
4 Snap ring
5 Bearing
6 E2 Flange
7 E3 Torque arm
8 Pin
9 Set screw
10 Hex socket cap bolt
11 Set screw

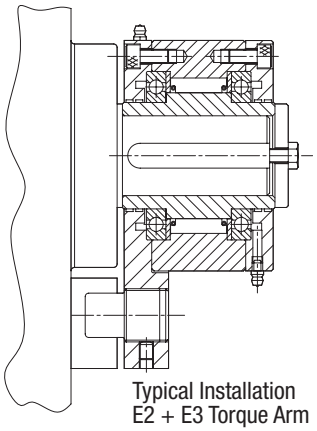

Typical Installation
E2 + E3 Torque Arm

Additional information including shaft and bore tolerances are found in the Engineering section starting on page 92.

Dimensions and Capacities

Model	Bore Size in. (mm)	Inner Race Keyway (mm)	A in. (mm)	B in. (mm)	F in. (mm)	L Chamfer in. (mm)	M_1 in. (mm)	Q in. (mm)	R in. (mm)	S in. (mm)	T in. (mm)	Weight lb. (kg)
BREU30 (K) E2 + E3	1.181	8 x 3.3	2.992	3.937	1.772	0.039	0.748	2.677	3.622	0.630	0.551	9.2
	(30)		(76)	(100)	(45)	(1.0)	(19)	(68)	(92)	(16)	(14)	(4.2)
BRUE35 (K) E2 + E3	1.378	10 x 3.3	3.110	4.331	1.969	0.039	0.866	2.992	4.016	0.787	0.709	11.0
	(35)		(79)	(110)	(50)	(1.0)	(22)	(76)	(102)	(20)	(18)	(5.0)
BREU40 (K) E2 + E3	1.575	12 x 3.3	3.386	4.921	2.165	0.051	0.866	3.346	4.409	0.787	0.709	15.4
	(40)		(86)	(125)	(55)	(1.3)	(22)	(85)	(112)	(20)	(18)	(7.0)
BREU45 (K) E2 + E3	1.772	14 x 3.8	3.386	5.118	2.362	0.051	0.984	3.543	4.724	0.984	0.866	16.9
	(45)		(86)	(130)	(60)	(1.3)	(25)	(90)	(120)	(25)	(22)	(7.7)
BREU50 (K) E2 + E3	1.969	14 x 3.8	3.701	5.906	2.756	0.051	0.984	4.016	5.315	0.984	0.866	24.2
	(50)		(94)	(150)	(70)	(1.3)	(25)	(102)	(135)	(25)	(22)	(11)
BREU55 (K) E2 + E3	2.165	16 x 4.3	4.094	6.299	2.953	0.059	1.181	4.252	5.591	1.260	0.984	30.8
	(55)		(104)	(160)	(75)	(1.5)	(30)	(108)	(142)	(32)	(25)	(14)
BREU60 (K) E2 + E3	2.362	18 x 4.4	4.724	6.693	3.150	0.059	1.181	4.409	5.709	1.260	0.984	37.8
	(60)		(120)	(170)	(80)	(1.5)	(30)	(112)	(145)	(32)	(25)	(17)
BREU70 (K) E2 + E3	2.756	20 x 4.9	5.276	7.480	3.543	0.071	1.378	5.315	6.890	1.496	1.181	53.9
	(70)		(134)	(190)	(90)	(1.8)	(35)	(135)	(175)	(38)	(30)	(25)
BREU80 (K) E2 + E3	3.150	22 x 5.4	5.669	8.268	4.134	0.071	1.378	5.709	7.283	1.496	1.181	70.2
	(80)		(144)	(210)	(105)	(1.8)	(35)	(145)	(185)	(38)	(30)	(32)
BREU90 (K) E2 + E3	3.543	25 x 5.4	6.220	9.055	4.724	0.079	1.772	6.102	8.071	1.969	1.575	90.4
	(90)		(158)	(230)	(120)	(2.0)	(45)	(155)	(205)	(50)	(40)	(41)
BREU100 (K) E2 + E3	3.937	28 x 6.4	7.323	10.630	5.512	0.079	1.772	7.087	9.055	1.969	1.575	143
	(100)		(186)	(270)	(140)	(2.0)	(45)	(180)	(230)	(50)	(40)	(65)
BREU130 (K) E2 + E3	5.118	32 x 7.4	8.346	12.205	6.299	0.098	2.362	8.071	10.551	2.677	2.165	207
	(130)		(212)	(310)	(160)	(2.5)	(60)	(205)	(268)	(68)	(55)	(94)
BREU150 (K) E2 + E3	5.906	36 x 8.4	9.685	15.748	7.874	0.098	2.362	10.039	12.795	2.677	2.165	418
	(150)		(246)	(400)	(200)	(2.5)	(60)	(255)	(325)	(68)	(55)	(190)

BREU E3 TORQUE ARM + E4 COVER

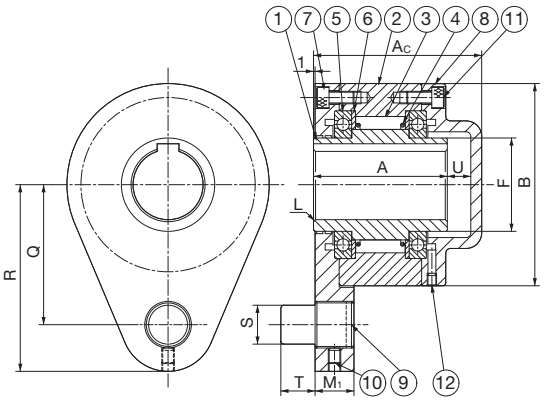

1 Inner race
2 Outer race
3 Cam
4 Spring
5 Bearing
6 Side plate
7 E3 torque arm
8 E4 cover
9 Pin
10 Set screw
11 Hollow hex bolt
12 Set screw

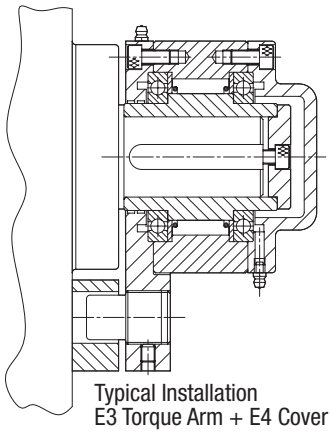

Typical Installation
E3 Torque Arm + E4 Cover

Additional information including shaft and bore tolerances are found in the Engineering section starting on page 92.

Dimensions and Capacities

Model	Bore Size in. (mm)	Inner Race Keyway (mm)	A in. (mm)	Ac in. (mm)	B in. (mm)	F in. (mm)	L Chamfer in. (mm)	M_1 in. (mm)	Q in. (mm)	R in. (mm)	S in. (mm)	T in. (mm)	U in. (mm)	Weight lb. (kg)
BREU30 (K) E3 + E4	1.181	8 x 3.3	2.992	3.622	3.937	1.772	0.039	0.748	2.677	3.622	0.630	0.551	0.394	9.9
	(30)		(76)	(92)	(100)	(45)	(1.0)	(19)	(68)	(92)	(16)	(14)	(10)	(4.5)
BRUE35 (K) E3 + E4	1.378	10 x 3.3	3.110	3.819	4.331	1.969	0.039	0.866	2.992	4.016	0.787	0.709	0.472	12
	(35)		(79)	(97)	(110)	(50)	(1.0)	(22)	(76)	(102)	(20)	(18)	(12)	(5.3)
BREU40 (K) E3 + E4	1.575	12 x 3.3	3.386	4.134	4.921	2.165	0.051	0.866	3.346	4.409	0.787	0.709	0.472	16
	(40)		(86)	(105)	(125)	(55)	(1.3)	(22)	(85)	(112)	(20)	(18)	(12)	(7.4)
BREU45 (K) E3 + E4	1.772	14 x 3.8	3.386	4.252	5.118	2.362	0.051	0.984	3.543	4.724	0.984	0.866	0.591	18
	(45)		(86)	(108)	(130)	(60)	(1.3)	(25)	(90)	(120)	(25)	(22)	(15)	(8.1)
BREU50 (K) E3 + E4	1.969	14 x 3.8	3.701	4.449	5.906	2.756	0.051	0.984	4.016	5.315	0.984	0.866	0.472	26
	(50)		(94)	(113)	(150)	(70)	(1.3)	(25)	(102)	(135)	(25)	(22)	(12)	(12)
BREU55 (K) E3 + E4	2.165	16 x 4.3	4.094	4.961	6.299	2.953	0.059	1.181	4.252	5.591	1.260	0.984	0.591	35
	(55)		(104)	(126)	(160)	(75)	(1.5)	(30)	(108)	(142)	(32)	(25)	(15)	(16)
BREU60 (K) E3 + E4	2.362	18 x 4.4	4.724	5.630	6.693	3.150	0.059	1.181	4.409	5.709	1.260	0.984	0.591	40
	(60)		(120)	(143)	(170)	(80)	(1.5)	(30)	(112)	(145)	(32)	(25)	(15)	(18)
BREU70 (K) E3 + E4	2.756	20 x 4.9	5.276	6.476	7.480	3.543	0.071	1.378	5.315	6.890	1.496	1.181	0.886	57
	(70)		(134)	(164.5)	(190)	(90)	(1.8)	(35)	(135)	(175)	(38)	(30)	(22.5)	(26)
BREU80 (K) E3 + E4	3.150	22 x 5.4	5.669	6.614	8.268	4.134	0.071	1.378	5.709	7.283	1.496	1.181	0.630	73
	(80)		(144)	(168)	(210)	(105)	(1.8)	(35)	(145)	(185)	(38)	(30)	(16)	(33)
BREU90 (K) E3 + E4	3.543	25 x 5.4	6.220	7.559	9.055	4.724	0.079	1.772	6.102	8.071	1.969	1.575	1.063	95
	(90)		(158)	(192)	(230)	(120)	(2.0)	(45)	(155)	(205)	(50)	(40)	(27)	(43)
BREU100 (K) E3 + E4	3.937	28 x 6.4	7.323	8.701	10.630	5.512	0.079	1.772	7.087	9.055	1.969	1.575	1.102	147
	(100)		(186)	(221)	(270)	(140)	(2.0)	(45)	(180)	(230)	(50)	(40)	(28)	(67)
BREU130 (K) E3 + E4	5.118	32 x 7.4	8.346	9.843	12.205	6.299	0.098	2.362	8.071	10.551	2.677	2.165	1.181	213
	(130)		(212)	(250)	(310)	(160)	(2.5)	(60)	(205)	(268)	(68)	(55)	(30)	(97)
BREU150 (K) E3 + E4	5.906	36 x 8.4	9.685	11.260	15.748	7.874	0.098	2.362	10.039	12.795	2.677	2.165	1.260	425
	(150)		(246)	(286)	(400)	(200)	(2.5)	(60)	(255)	(325)	(68)	(55)	(32)	(193)

BREU E5 FLANGE + E5 FLANGE

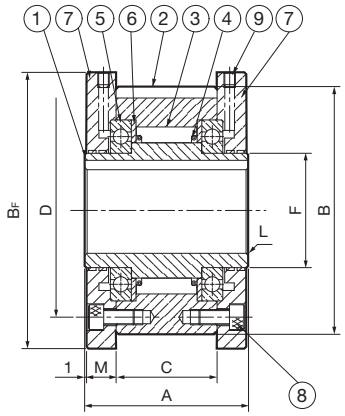

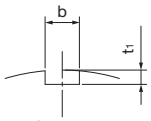

1 Inner race
2 Outer race
3 Cam
4 Spring
5 Bearing
6 Side plate
7 E5 flange
8 Hex socket cap bolt
9 Set screw

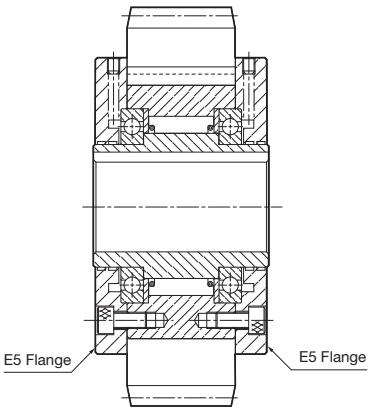

Typical Installation E5 Flange + E5 Flange

Additional information including shaft and bore tolerances are found in the Engineering section starting on page 92.

Dimensions and Capacities

Model	Bore Size in. (mm)	Inner Race Keyway (mm)	A in. (mm)	B in. (mm)	B_F in. (mm)	C in. (mm)	D PCD in. (mm)	F in. (mm)	L Chamfer in. (mm)	M in. (mm)	b in. (mm)	t_1 in. (mm)	Weight lb. (kg)
BREU30K E5 + E5	1.181	8 x 3.3	2.992	3.937	4.291	2.008	3.425	1.772	0.039	0.453	0.315	0.157	9
	(30)		(76)	(100)	(109)	(51)	(87)	(45)	(1.0)	(11.5)	(8)	(4.0)	(3.9)
BRUE35K E5 + E5	1.378	10 x 3.3	3.110	4.331	4.685	1.969	3.780	1.969	0.039	0.531	0.394	0.197	11
	(35)		(79)	(110)	(119)	(50)	(96)	(50)	(1.0)	(13.5)	(10)	(5.0)	(4.9)
BREU40K E5 + E5	1.575	12 x 3.3	3.386	4.921	5.315	2.087	4.252	2.165	0.051	0.610	0.472	0.197	15
	(40)		(86)	(125)	(135)	(53)	(108)	(55)	(1.3)	(15.5)	(12)	(5.0)	(7.0)
BREU45K E5 + E5	1.772	14 x 3.8	3.386	5.118	5.512	2.087	4.409	2.362	0.051	0.610	0.551	0.217	16
	(45)		(86)	(130)	(140)	(53)	(112)	(60)	(1.3)	(15.5)	(14)	(5.5)	(7.4)
BREU50K E5 + E5	1.969	14 x 3.8	3.701	5.906	6.299	2.520	5.197	2.756	0.051	0.551	0.551	0.217	24
	(50)		(94)	(150)	(160)	(64)	(132)	(70)	(1.3)	(14)	(14)	(5.5)	(10.7)
BREU55K E5 + E5	2.165	16 x 4.3	4.094	6.299	6.693	2.598	5.433	2.953	0.059	0.709	0.630	0.236	30
	(55)		(104)	(160)	(170)	(66)	(138)	(75)	(1.5)	(18)	(16)	(6.0)	(13.6)
BREU60K E5 + E5	2.362	18 x 4.4	4.724	6.693	7.165	3.307	5.906	3.150	0.059	0.669	0.709	0.276	38
	(60)		(120)	(170)	(182)	(84)	(150)	(80)	(1.5)	(17)	(18)	(7.0)	(17.3)
BREU70K E5 + E5	2.756	20 x 4.9	5.276	7.480	7.953	3.740	6.496	3.543	0.071	0.728	0.787	0.295	52
	(70)		(134)	(190)	(202)	(95)	(165)	(90)	(1.8)	(18.5)	(20)	(7.5)	(23.5)
BREU80K E5 + E5	3.150	22 x 5.4	5.669	8.268	8.740	3.937	7.283	4.134	0.071	0.827	0.866	0.354	49
	(80)		(144)	(210)	(222)	(100)	(185)	(105)	(1.8)	(21)	(22)	(9.0)	(31.3)
BREU90K E5 + E5	3.543	25 x 5.4	6.220	9.055	9.528	4.528	8.110	4.724	0.079	0.807	0.984	0.354	84
	(90)		(158)	(230)	(242)	(115)	(206)	(120)	(2.0)	(20.5)	(25)	(9.0)	(38.4)
BREU100K E5 + E5	3.937	28 x 6.4	7.323	10.630	11.102	4.882	9.449	5.512	0.079	1.181	1.102	0.394	139
	(100)		(186)	(270)	(282)	(124)	(240)	(140)	(2.0)	(30)	(28)	(10.0)	(63.0)
BREU130K E5 + E5	5.118	32 x 7.4	8.346	12.205	12.677	5.984	10.945	6.299	0.098	1.142	1.260	0.433	194
	(130)		(212)	(310)	(322)	(152)	(278)	(160)	(2.5)	(29)	(32)	(11.0)	(88.0)
BREU150K E5 + E5	5.906	36 x 8.4	9.685	15.748	16.220	7.087	14.173	7.874	0.098	1.260	1.417	0.472	405
	(150)		(246)	(400)	(412)	(180)	(360)	(200)	(2.5)	(32)	(36)	(12.0)	(184)

E5 + E5 flange combination is available only for BREU K model.

BREU E2 FLANGE + E7 FLANGE

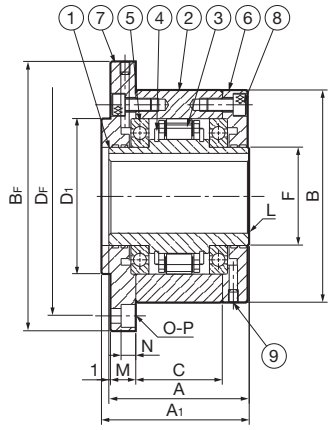

1 Inner race
2 Outer race
3 Cam cage
4 Snap ring
5 Bearing
6 E2 Flange
7 E7 Flange
8 Hex socket cap bolt
9 Set screw

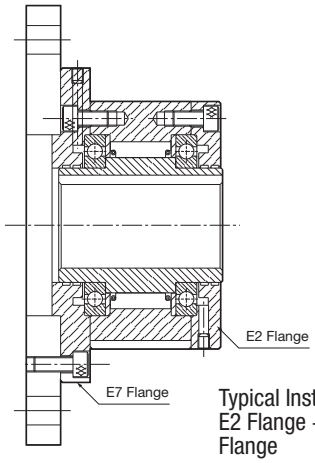

Typical Installation
E2 Flange + E7 Flange

Additional information including shaft and bore tolerances are found in the Engineering section starting on page 92.

Dimensions and Capacities

Model	Bore Size in. (mm)	Inner Race Keyway (mm)	A in. (mm)	A_1 in. (mm)	B in. (mm)	B_F in. (mm)	C in. (mm)	D_1 in. (mm)	D_F in. (mm)	F in. (mm)	L Chamfer in. (mm)	M in. (mm)	N in. (mm)	O-P Qt. & Hole (mm)	Weight lb. (kg)
BREU30 (K) E2 + E7	1.181	8 x 3.3	2.992	3.071	3.937	5.039	2.008	2.953	4.488	1.772	0.039	0.453	0.268	6-6.6	9.2
	(30)		(76)	(78)	(100)	(128)	(51)	(75)	(114)	(45)	(1.0)	(11.5)	(6.8)		(4.2)
BRUE35 (K) E2 + E7	1.378	10 x 3.3	3.110	3.189	4.331	5.512	1.969	3.150	4.882	1.969	0.039	0.512	0.268	6-6.6	11.7
	(35)		(79)	(81)	(110)	(140)	(50)	(80)	(124)	(50)	(1.0)	(13.0)	(6.8)		(5.3)
BREU40 (K) E2 + E7	1.575	12 x 3.3	3.386	3.465	4.921	6.299	2.087	3.543	5.591	2.165	0.051	0.591	0.354	6-9.0	16.7
	(40)		(86)	(88)	(125)	(160)	(53)	(90)	(142)	(55)	(1.3)	(15.0)	(9)		(7.6)
BREU45 (K) E2 + E7	1.772	14 x 3.8	3.386	3.465	5.118	6.496	2.087	3.740	5.748	2.362	0.051	0.591	0.354	8-9.0	17.6
	(45)		(86)	(88)	(130)	(165)	(53)	(95)	(146)	(60)	(1.3)	(15.0)	(9)		(8.0)
BREU50 (K) E2 + E7	1.969	14 x 3.8	3.701	3.780	5.906	7.283	2.520	4.331	6.535	2.756	0.051	0.512	0.354	8-9.0	24.9
	(50)		(94)	(96)	(150)	(185)	(64)	(110)	(166)	(70)	(1.3)	(13.0)	(9)		(11)
BREU55 (K) E2 + E7	2.165	16 x 4.3	4.094	4.173	6.299	8.031	2.598	4.528	7.165	2.953	0.059	0.669	0.433	8-11.0	32.6
	(55)		(104)	(106)	(160)	(204)	(66)	(115)	(182)	(75)	(1.5)	(17.0)	(11)		(15)
BREU60 (K) E2 + E7	2.362	18 x 4.4	4.724	4.803	6.693	8.425	3.307	4.921	7.559	3.150	0.059	0.630	0.433	10-11.0	40.0
	(60)		(120)	(122)	(170)	(214)	(84)	(125)	(192)	(80)	(1.5)	(16.0)	(11)		(18)
BREU70 (K) E2 + E7	2.756	20 x 4.9	5.276	5.354	7.480	9.213	3.740	5.512	8.346	3.543	0.071	0.689	0.433	10-11.0	54.6
	(70)		(134)	(136)	(190)	(234)	(95)	(140)	(212)	(90)	(1.8)	(17.5)	(11)		(25)
BREU80 (K) E2 + E7	3.150	22 x 5.4	5.669	5.748	8.268	10.000	3.937	6.299	9.134	4.134	0.071	0.787	0.433	10-11.0	72.4
	(80)		(144)	(146)	(210)	(254)	(100)	(160)	(232)	(105)	(1.8)	(20.0)	(11)		(33)
BREU90 (K) E2 + E7	3.543	25 x 5.4	6.220	6.299	9.055	10.945	4.528	7.087	10.000	4.724	0.079	0.748	0.512	10-14.0	89.8
	(90)		(158)	(160)	(230)	(278)	(115)	(180)	(254)	(120)	(2.0)	(19.0)	(13)		(41)
BREU100 (K) E2 + E7	3.937	28 x 6.4	7.323	7.402	10.630	13.189	4.882	8.268	12.008	5.512	0.079	1.102	0.689	10-18.0	152
	(100)		(186)	(188)	(270)	(335)	(124)	(210)	(305)	(140)	(2.0)	(28.0)	(17.5)		(69)
BREU130 (K) E2 + E7	5.118	32 x 7.4	8.346	8.425	12.205	14.961	5.984	9.449	13.583	6.299	0.098	1.063	0.689	12-18.0	211
	(130)		(212)	(214)	(310)	(380)	(152)	(240)	(345)	(160)	(2.5)	(27.0)	(17.5)		(96)
BREU150 (K) E2 + E7	5.906	36 x 8.4	9.685	9.764	15.748	19.094	7.087	12.205	17.520	7.874	0.098	1.181	0.846	12-22.0	436
	(150)		(246)	(248)	(400)	(485)	(180)	(310)	(445)	(200)	(2.5)	(30.0)	(21.5)		(198)

BR-HT SERIES CAM CLUTCH

BR-HT is mainly used in backstop applications as an integral part of a gear reducer. Prevention of reverse rotation for inclined conveyor and bucket elevator are typical application examples. BR-HT assures not only the immediate backstop function under high torque, but also long service life by the “lift-off” design.
In addition, installation on the high speed shaft with low torque enables selection of more compact models with resulting lower cost.

Example How To Order Code: BR-HT Series Cam Clutch

BR	40	HT	-	R66B	-	35
Series	Size	Descriptor	-	Cross	-	Bore
BR: High speed overrunning backstop clutch	**40:** Size of the Cam Clutch BR-HT Series has sizes available from 15 thru 300	**HT:** Descriptor for high torque capacity	-	**R66B:** Provides interchange information plus description of the cam cage width The "B" is an internal Tsubaki designator for the width of the cam	-	**35:** 35 mm bore diameter For each size within a given BR Series Cam Clutch, multiple bore diameters are available

Service Life of BR-HT Series

The service life of previous TSUBAKI Cam Clutch models was determined as the frictional service life during free-running (when the clutch was disengaged) and the fatigue service life of the engaged clutch. However, with BR-HT Series, frictional service life is not a factor because there is no mechanical contact when the clutch is disengaged. As a result, service life is determined solely by the fatigue life of the engaged clutch.

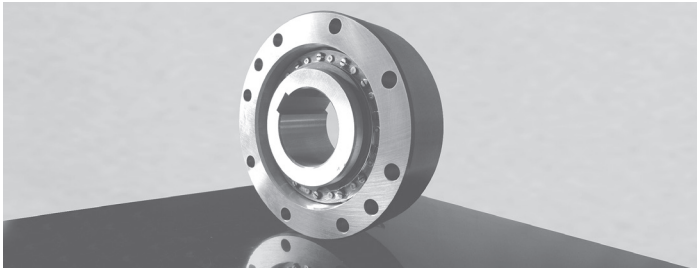

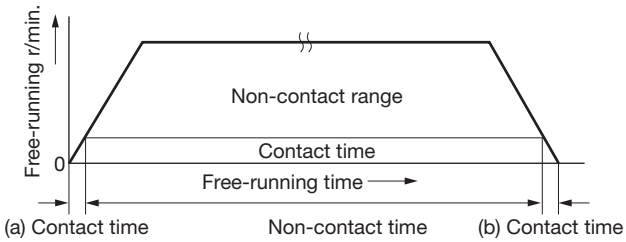

Friction in the clutch mechanism only occurs during a very short period of time denoted by “a” and “b”. “a” is the time during which the cam is engaged until the acceleration of inner race causes it to disengage. “b” is the time during which the cam engages when the inner race decelerates.

BR-HT SERIES CAM CLUTCH

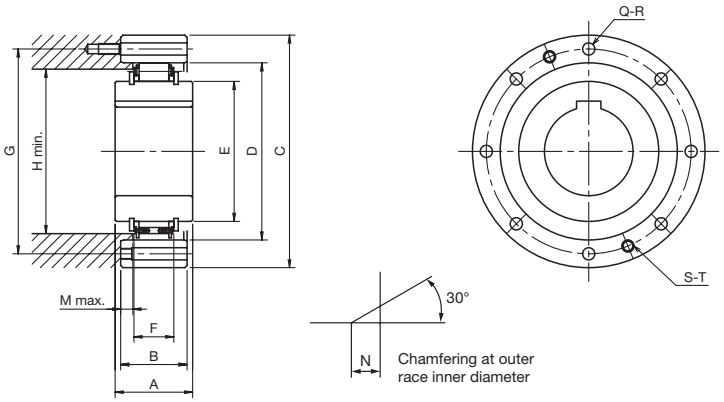

Additional information including shaft and bore tolerances are found in the Engineering section starting on page 92.

Dimensions and Capacities

Model	Bore Size mm	T.C. lb.ft (Nm)	Inner Race Overrunning Speed (r/min) Min.	Inner Race Overrunning Speed (r/min) Max.	Max. Engage-ment (r/min)	A in. (mm)	B in. (mm)	C in. (mm)	D in. (mm)	E in. (mm)	Mounting Holes PCD G	Mounting Holes Qty-Size Q-R	Removal Holes Qty-Size S-T	F in. (mm)	Weight lbs. (kg)	H min. in. (mm)	M max. in. (mm)	N Chamfer in. (mm)
BR15HT-R31A	*20	77 (105)	880	3600	550	0.945 (24)	0.984 (25)	3.346 (85)	2.165 (55)	1.181 (30)	2.756 (70)	6-M6	2-M6	0.669 (17)	1.8 (0.8)	1.772 (45)	0.118 (3)	0.039 (1)
BR18HT-R38A	*25	114 (155)	850	3600	500	0.945 (24)	0.984 (25)	3.543 (90)	2.441 (62)	1.457 (37)	2.953 (75)	6-M6	2-M6	0.669 (17)	2.0 (0.9)	1.969 (50)	0.118 (3)	0.039 (1)
BR20HT-S20B	20	166 (225)	850	3600	400	1.378 (35)	1.378 (35)	3.543 (90)	2.598 (66)	1.614 (41)	3.071 (78)	6-M6	2-M6	0.984 (25)	2.9 (1.3)	2.087 (53)	0.157 (4)	0.039 (1)
BR25HT-B46B	25 30	295 (400)	800	3600	380	1.378 (35)	1.378 (35)	3.740 (95)	2.756 (70)	1.772 (45)	3.228 (82)	6-M6	2-M6	0.984 (25)	3.1 (1.4)	2.283 (58)	0.157 (4)	0.039 (1)
BR30HT-S30B	30	369 (500)	740	3600	360	1.378 (35)	1.378 (35)	3.937 (100)	2.953 (75)	1.969 (50)	3.425 (87)	6-M6	2-M6	0.984 (25)	3.3 (1.5)	2.520 (64)	0.157 (4)	0.039 (1)
BR30HT-R51B	25 30 35 36	369 (500)	740	3600	360	1.378 (35)	1.378 (35)	4.134 (105)	2.953 (75)	1.969 (50)	3.543 (90)	6-M6	2-M6	0.984 (25)	4.0 (1.8)	2.520 (64)	0.157 (4)	0.039 (1)
BR35HT-B56B	35 40	443 (600)	710	3600	340	1.378 (35)	1.378 (35)	4.331 (110)	3.150 (80)	2.165 (55)	3.780 (96)	8-M6	2-M6	0.984 (25)	4.2 (1.9)	2.756 (70)	0.157 (4)	0.039 (1)
BR38HT-R61A	30 35 40 *45	313 (425)	740	3600	400	0.984 (25)	0.984 (25)	4.724 (120)	3.346 (85)	2.362 (60)	4.134 (105)	6-M8	2-M8	0.748 (19)	4.0 (1.8)	2.913 (74)	0.118 (3)	0.039 (1)
BR40HT-S40B	40	627 (850)	670	3600	320	1.378 (35)	1.378 (35)	4.921 (125)	3.543 (90)	2.559 (65)	4.252 (108)	8-M8	2-M8	0.984 (25)	5.3 (2.4)	3.228 (82)	0.157 (4)	0.039 (1)
BR40HT-R66B	35 40 45 *48	627 (850)	670	3600	320	1.378 (35)	1.378 (35)	5.197 (132)	3.543 (90)	2.559 (65)	4.528 (115)	8-M8	2-M8	0.984 (25)	6.4 (2.9)	3.228 (82)	0.157 (4)	0.039 (1)
BR45HT-S45B	45	701 (950)	640	3600	310	1.378 (35)	1.378 (35)	5.118 (130)	3.740 (95)	2.756 (70)	4.409 (112)	8-M8	2-M8	0.984 (25)	5.7 (2.6)	3.386 (86)	0.157 (4)	0.039 (1)
BR48HT-R76B	45 55 *60	811 (1100)	620	3600	300	1.378 (35)	1.378 (35)	5.512 (140)	3.937 (100)	2.953 (75)	4.921 (125)	8-M8	2-M8	0.984 (25)	7.3 (3.3)	3.622 (92)	0.157 (4)	0.039 (1)
BR50HT-B86B	40 45 50 60 65 *70	1069 (1450)	590	3600	280	1.575 (40)	1.575 (40)	5.906 (150)	4.331 (110)	3.346 (85)	5.197 (132)	8-M8	2-M8	0.984 (25)	9.5 (4.3)	4.055 (103)	0.256 (6.5)	0.039 (1)
BR58HT-R101B	55 70 *80	1328 (1800)	550	3600	260	1.969 (50)	1.969 (50)	6.890 (175)	4.921 (125)	3.937 (100)	6.102 (155)	8-M10	2-M10	0.984 (25)	14.7 (6.7)	4.606 (117)	0.453 (11.5)	0.039 (1)
BR60HT-B85A	45 50 60 65	1770 (2400)	420	3600	230	2.362 (60)	1.969 (50)	6.890 (175)	4.921 (125)	3.622 (92)	6.102 (155)	8-M10	2-M10	1.417 (36)	16.7 (7.6)	4.331 (110)	0.236 (6)	0.039 (1)
BR70HT-B100A	45 50 55 60 70 75 *80	2323 (3150)	390	3600	220	2.362 (60)	1.969 (50)	7.480 (190)	5.512 (140)	4.213 (107)	6.496 (165)	12-M10	2-M10	1.417 (36)	20.2 (9.2)	4.921 (125)	0.236 (6)	0.059 (1.5)
BR80HT-S80A	80	3688 (5000)	440	3600	200	2.756 (70)	2.362 (60)	8.268 (210)	6.299 (160)	5.000 (127)	7.283 (185)	12-M10	2-M10	1.417 (36)	26.4 (12)	5.827 (148)	0.433 (11)	0.059 (1.5)
BR80HT-B120B	60 65 70 75 80 95	5163 (7000)	310	3600	160	2.756 (70)	2.362 (60)	8.268 (210)	6.299 (160)	5.000 (127)	7.283 (185)	12-M10	2-M10	1.969 (50)	28.6 (13)	5.827 (148)	0.157 (4)	0.059 (1.5)
BR90HT-S90A	90	4425 (6000)	410	3000	190	3.150 (80)	2.756 (70)	9.055 (230)	7.087 (180)	5.787 (147)	8.110 (206)	12-M12	2-M12	1.417 (36)	35.2 (16)	6.693 (170)	0.630 (16)	0.079 (2)
BR90HT-B140B	65 90 100 110	6638 (9000)	300	3000	150	2.756 (70)	2.756 (70)	9.646 (245)	7.087 (180)	5.787 (147)	8.583 (218)	12-M12	2-M12	1.969 (50)	44.0 (20)	6.693 (170)	0.354 (9)	0.079 (2)
BR95HT-S100C	100	15120 (20500)	240	2700	130	3.543 (90)	3.150 (80)	11.417 (290)	8.268 (210)	6.969 (177)	10.157 (258)	12-M16	2-M16	2.480 (63)	72.6 (33)	7.874 (200)	0.295 (7.5)	0.079 (2)
BR95HT-R170C	70 85 90 100 120 130	15120 (20500)	240	2700	130	3.150 (80)	3.150 (80)	11.417 (290)	8.268 (210)	6.969 (177)	10.157 (258)	12-M16	2-M16	2.480 (63)	77.0 (35)	7.874 (200)	0.295 (7.5)	0.079 (2)

Notes:
1. T.C.=Torque Capacity. The maximum transmissible torque is twice the T.C.
2. Keyway size is not listed in the table. Keyway size is per ISOR773 DIN6885.1 unless the bore is preceded by an asterisk (*). If bore is preceded by an asterisk, keyway is per DIN6885.3.
3. Minimum overrunning speed of inner race should not be below listed value during continuous operation.
4. Max. engagement speed must not be exceeded when transmitting torque.

BR-HT SERIES CAM CLUTCH

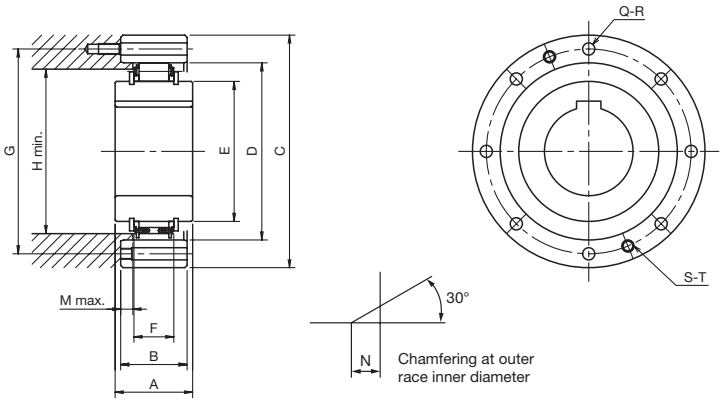

Additional information including shaft and bore tolerances are found in the Engineering section starting on page 92.

Dimensions and Capacities

Model	Bore Size mm	T.C. lb.ft (Nm)	Inner Race Overrunning Speed (r/min) Min.	Inner Race Overrunning Speed (r/min) Max.	Max. Engage-ment (r/min)	A in. (mm)	B in. (mm)	C in. (mm)	D in. (mm)	E in. (mm)	Mounting Holes PCD G	Mounting Holes Qty-Size Q-R	Removal Holes Qty-Size S-T	F in. (mm)	Weight lbs. (kg)	H min. in. (mm)	M max. in. (mm)	N Chamfer in. (mm)
BR98HT-R200C	130 155	19914 (27000)	230	2100	110	3.150 (80)	3.150 (80)	12.205 (310)	9.449 (240)	8.150 (207)	10.945 (278)	12-M16	2-M16	2.480 (63)	72.6 (33)	9.055 (230)	0.295 (7.5)	0.079 (2)
BR100HT-S100A	100	8113 (11000)	440	2700	210	3.543 (90)	3.150 (80)	11.417 (290)	8.268 (210)	5.630 (143)	10.157 (258)	12-M16	2-M16	2.071 (52.6)	61.6 (28)	7.874 (200)	0.453 (11.5)	0.079 (2)
BR130HT-S130A	130	11801 (16000)	400	2400	190	3.150 (80)	3.150 (80)	12.677 (322)	9.449 (240)	6.811 (173)	10.945 (278)	12-M16	2-M16	2.071 (52.6)	72.6 (33)	8.268 (210)	0.453 (11.5)	0.079 (2)
BR180HT-S180A	180	23602 (32000)	300	1300	160	3.543 (90)	3.150 (80)	16.220 (412)	12.205 (310)	9.567 (243)	14.173 (360)	12-M20	2-M20	2.087 (53)	123.2 (56)	11.024 (280)	0.453 (11.5)	0.079 (2)
BR180HT-S180C	180	39091 (53000)	250	1300	120	4.724 (120)	4.724 (120)	16.614 (422)	12.205 (310)	9.567 (243)	14.567 (370)	16-M20	2-M20	3.268 (83)	187.0 (85)	11.024 (280)	0.650 (16.5)	0.079 (2)
BR180HT-S180WA	180	47204 (64000)	300	1300	160	6.299 (160)	6.299 (160)	16.220 (412)	12.205 (310)	9.567 (243)	14.173 (360)	12-M20	2-M20	4.173 (106)	235.4 (107)	11.024 (280)	1.181 (30)	0.079 (2)
BR180HT-S180WC	180	78181 (106000)	250	1300	120	9.449 (240)	9.449 (240)	16.732 (425)	12.205 (310)	9.567 (243)	14.567 (370)	16-M20	2-M20	6.535 (166)	382.8 (174)	11.024 (280)	1.378 (35)	0.079 (2)
BR180HT-R240A	185	23602 (32000)	220	1300	110	3.543 (90)	3.150 (80)	15.748 (400)	12.205 (310)	9.567 (243)	14.173 (360)	12-M20	2-M20	2.087 (53)	110.0 (50)	11.024 (280)	0.453 (11.5)	0.079 (2)
BR180HT-R240D	185	47204 (64000)	210	1300	100	4.724 (120)	4.921 (125)	16.535 (420)	12.205 (310)	9.567 (243)	14.567 (370)	16-M24	2-M24	3.780 (96)	184.8 (84)	11.024 (280)	0.492 (12.5)	0.079 (2)
BR180HT-R240WB	185	51629 (70000)	220	1300	110	6.299 (160)	6.299 (160)	16.220 (412)	12.205 (310)	9.567 (243)	14.173 (360)	24-M20	2-M20	5.512 (140)	220.0 (100)	11.024 (280)	0.315 (8)	0.079 (2)
BR180HT-R240WD	185	94408 (128000)	210	1300	100	9.449 (240)	9.449 (240)	16.732 (425)	12.205 (310)	9.567 (243)	14.567 (370)	24-M24	2-M24	7.559 (192)	358.6 (163)	11.024 (280)	0.866 (22)	0.079 (2)
BR190HT-R260A	205	28765 (39000)	200	1300	95	4.134 (105)	3.150 (80)	16.929 (430)	12.992 (330)	10.354 (263)	14.961 (380)	16-M20	2-M20	2.087 (53)	132.0 (60)	11.811 (300)	0.453 (11.5)	0.079 (2)
BR220HT-S220A	220	33190 (45000)	280	1100	140	4.134 (105)	3.150 (80)	18.504 (470)	14.173 (360)	11.535 (293)	16.142 (410)	16-M20	2-M20	2.087 (53)	162.8 (74)	12.992 (330)	0.453 (11.5)	0.079 (2)
BR220HT-S220C	220	51629 (70000)	230	1100	110	4.724 (120)	4.724 (120)	18.504 (470)	14.173 (360)	11.535 (293)	16.142 (410)	24-M20	2-M20	3.268 (83)	220.0 (100)	12.992 (330)	0.650 (16.5)	0.079 (2)
BR220HT-S220WA	220	66380 (90000)	280	1100	140	6.299 (160)	6.299 (160)	18.898 (480)	14.173 (360)	11.535 (293)	16.142 (410)	18-M24	2-M24	4.173 (106)	310.2 (141)	12.992 (330)	0.984 (25)	0.079 (2)
BR220HT-S220WC	220	103258 (140000)	230	1100	110	9.449 (240)	9.449 (240)	19.291 (490)	14.173 (360)	11.535 (293)	16.142 (410)	20-M30	2-M30	6.535 (166)	473.0 (215)	12.992 (330)	1.378 (35)	0.079 (2)
BR220HT-R290B	230	44254 (60000)	195	1100	115	4.134 (105)	3.150 (80)	18.110 (460)	14.173 (360)	11.535 (293)	16.142 (410)	16-M20	2-M20	2.756 (70)	191.4 (87)	12.992 (330)	0.118 (3)	0.079 (2)
BR220HT-R290D	230	67856 (92000)	190	1100	95	4.724 (120)	4.331 (110)	18.110 (460)	14.173 (360)	11.535 (293)	16.142 (410)	16-M20	2-M20	3.780 (96)	321.2 (146)	12.992 (330)	0.197 (5)	0.079 (2)
BR220HT-R290WB	230	88507 (120000)	195	1100	115	6.299 (160)	6.299 (160)	18.898 (480)	14.173 (360)	11.535 (293)	16.142 (410)	18-M24	2-M24	5.512 (140)	264.0 (120)	12.992 (330)	0.315 (8)	0.079 (2)
BR220HT-R290WD	230	135711 (184000)	190	1100	95	9.449 (240)	9.449 (240)	19.291 (490)	14.173 (360)	11.535 (293)	16.732 (425)	20-M30	2-M30	7.559 (192)	453.2 (206)	12.992 (330)	0.866 (22)	0.079 (2)
BR230HT-R310B	240	51629 (70000)	190	1100	90	4.331 (110)	4.921 (125)	19.567 (497)	14.961 (380)	12.323 (313)	17.717 (450)	24-M20	2-M20	2.756 (70)	242.0 (110)	13.780 (350)	1.004 (25.5)	0.118 (3)

Notes:
1. T.C.=Torque Capacity. The maximum transmissible torque is twice the T.C.
2. Keyway size is not listed in the table. Keyway size is per ISOR773 DIN6885.1 unless the bore is preceded by an asterisk (*)
   If bore is preceded by an asterisk, keyway is per DIN6885.3
3. Minimum overrunning speed of inner race should not be below listed value during continuous operation.
4. Max. engagement speed must not be exceeded when transmitting torque.

BR-HT SERIES CAM CLUTCH

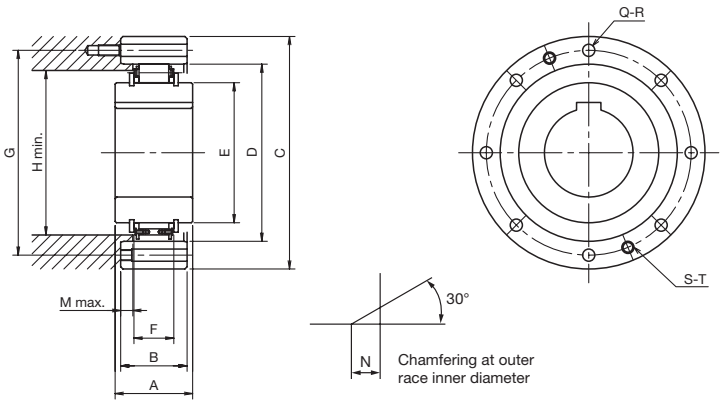

Additional information including shaft and bore tolerances are found in the Engineering section starting on page 92.

Dimensions and Capacities

Model	Bore Size mm	T.C. lb.ft (Nm)	Inner Race Overrunning Speed (r/min) Min.	Inner Race Overrunning Speed (r/min) Max.	Max. Engage-ment (r/min)	A in. (mm)	B in. (mm)	C in. (mm)	D in. (mm)	E in. (mm)	Mounting Holes PCD G	Mounting Holes Qty-Size Q-R	Removal Holes Qty-Size S-T	F in. (mm)	Weight lbs. (kg)	H min. in. (mm)	M max. in. (mm)	N Chamfer in. (mm)
BR230HT-R310D	240	81132 (110000)	185	1100	80	4.724 (120)	4.921 (125)	19.567 (497)	14.961 (380)	12.323 (313)	17.717 (450)	24-M20	2-M20	3.780 (96)	255.2 (116)	13.780 (350)	0.492 (12.5)	0.118 (3)
BR240HT-S240A	240	39828 (54000)	220	1100	120	4.134 (105)	3.543 (90)	19.685 (500)	15.354 (390)	12.717 (323)	17.323 (440)	16-M20	2-M20	2.087 (53)	200.2 (91)	14.173 (360)	0.650 (16.5)	0.118 (3)
BR240HT-S240C	240	64905 (88000)	185	1100	110	4.724 (120)	4.724 (120)	20.472 (520)	15.354 (390)	12.717 (323)	17.323 (440)	16-M24	2-M24	3.268 (83)	283.8 (129)	14.173 (360)	0.650 (16.5)	0.118 (3)
BR240HT-S240WA	240	79656 (108000)	220	1100	120	7.087 (180)	7.087 (180)	19.882 (505)	15.354 (390)	12.717 (323)	17.323 (440)	24-M24	2-M24	4.173 (106)	354.2 (161)	14.173 (360)	1.378 (35)	0.118 (3)
BR240HT-S240WC	240	129811 (176000)	185	1100	110	9.449 (240)	9.449 (240)	20.866 (530)	15.354 (390)	12.717 (323)	17.323 (440)	24-M30	2-M30	6.535 (166)	547.8 (249)	14.173 (360)	1.378 (35)	0.118 (3)
BR240HT-R320B	250	56792 (77000)	190	1100	115	4.134 (105)	3.150 (80)	19.291 (490)	15.354 (390)	12.717 (323)	17.323 (440)	16-M24	2-M24	2.756 (70)	171.6 (78)	14.173 (360)	0.118 (3)	0.118 (3)
BR240HT-R320D	250	83344 (113000)	180	1100	105	4.724 (120)	4.724 (120)	20.472 (520)	15.354 (390)	12.717 (323)	17.323 (440)	16-M24	2-M24	3.780 (96)	281.6 (128)	14.173 (360)	0.394 (10)	0.118 (3)
BR240HT-R320WB	250	113584 (154000)	190	1100	115	7.087 (180)	7.087 (180)	19.882 (505)	15.354 (390)	12.717 (323)	17.323 (440)	24-M24	2-M24	5.512 (140)	380.6 (173)	14.173 (360)	0.709 (18)	0.118 (3)
BR240HT-R320WD	250	166689 (226000)	180	1100	105	9.449 (240)	9.449 (240)	20.866 (530)	15.354 (390)	12.717 (323)	18.110 (460)	24-M30	2-M30	7.559 (192)	569.8 (259)	14.173 (360)	0.866 (22)	0.118 (3)
BR260HT-S260A	260	48679 (66000)	250	1000	130	4.134 (105)	4.134 (105)	21.654 (550)	16.929 (430)	14.291 (363)	19.685 (500)	16-M24	2-M24	2.244 (57)	268.4 (122)	15.748 (400)	0.866 (22)	0.118 (3)
BR260HT-S260C	260	81132 (110000)	190	1000	100	4.921 (125)	4.921 (125)	22.835 (580)	16.929 (430)	14.291 (363)	19.685 (500)	24-M24	2-M24	3.425 (87)	374.0 (170)	15.748 (400)	0.669 (17)	0.118 (3)
BR260HT-S260WA	260	97358 (132000)	250	1000	130	8.268 (210)	8.268 (210)	21.654 (550)	16.929 (430)	14.291 (363)	19.685 (500)	24-M24	2-M24	4.488 (114)	517.0 (235)	15.748 (400)	1.811 (46)	0.118 (3)
BR260HT-S260WC	260	162263 (220000)	190	1000	100	9.843 (250)	9.843 (250)	22.835 (580)	16.929 (430)	14.291 (363)	19.685 (500)	24-M30	2-M30	6.850 (174)	710.6 (323)	15.748 (400)	1.417 (36)	0.118 (3)
BR260HT-R360D	280	110634 (150000)	170	1000	90	4.921 (125)	4.724 (120)	21.260 (540)	16.929 (430)	14.291 (363)	19.685 (500)	24-M24	2-M24	3.937 (100)	279.4 (127)	15.748 (400)	0.315 (8)	0.118 (3)
BR260HT-R360WB	280	144562 (196000)	175	1000	95	8.268 (210)	8.268 (210)	21.654 (550)	16.929 (430)	14.291 (363)	19.685 (500)	24-M24	2-M24	5.827 (148)	499.4 (227)	15.748 (400)	1.142 (29)	0.118 (3)
BR260HT-R360WD	280	221268 (300000)	170	1000	90	9.843 (250)	9.843 (250)	22.835 (580)	16.929 (430)	14.291 (363)	19.685 (500)	24-M30	2-M30	7.874 (200)	684.2 (311)	15.748 (400)	0.906 (23)	0.118 (3)
BR300HT-S300A	300	60480 (82000)	230	1000	120	4.134 (105)	4.134 (105)	24.803 (630)	18.898 (480)	16.260 (413)	22.047 (560)	24-M24	2-M24	2.087 (53)	358.6 (163)	18.110 (460)	0.866 (22)	0.118 (3)
BR300HT-S300C	300	103258 (140000)	200	1000	95	4.921 (125)	4.921 (125)	24.803 (630)	18.898 (480)	16.260 (413)	22.047 (560)	24-M24	2-M24	3.268 (83)	435.6 (198)	18.110 (460)	0.669 (17)	0.118 (3)
BR300HT-S300WA	300	120960 (164000)	230	1000	120	8.268 (210)	8.268 (210)	24.803 (630)	18.898 (480)	16.260 (413)	22.047 (560)	24-M24	2-M24	4.173 (106)	712.8 (324)	18.110 (460)	1.811 (46)	0.118 (3)
BR300HT-R410D	320	143824 (195000)	165	1000	85	4.921 (125)	4.724 (120)	24.803 (630)	18.898 (480)	16.260 (413)	22.047 (560)	24-M24	2-M24	3.937 (100)	409.2 (186)	18.110 (460)	0.315 (8)	0.118 (3)
BR300HT-R410WB	320	184390 (250000)	165	1000	85	8.268 (210)	8.268 (210)	24.803 (630)	18.898 (480)	16.260 (413)	22.047 (560)	24-M24	2-M24	5.827 (148)	690.8 (314)	18.110 (460)	1.142 (29)	0.118 (3)
BR300HT-R410WD	320	269947 (366000)	165	1000	85	8.661 (220)	8.661 (220)	24.803 (630)	18.898 (480)	16.260 (413)	22.047 (560)	24-M30	2-M30	7.874 (200)	712.8 (324)	18.110 (460)	0.315 (8)	0.118 (3)

Notes:
1. T.C.=Torque Capacity. The maximum transmissible torque is twice the T.C.
2. Keyway size is not listed in the table. Keyway size is per ISOR773 DIN6885.1 unless the bore is preceded by an asterisk (*). If bore is preceded by an asterisk, keyway is per DIN6885.3.
3. Minimum overrunning speed of inner race should not be below listed value during continuous operation.
4. Max. engagement speed must not be exceeded when transmitting torque.

BRUS SERIES BACKSTOPS

The BRUS Series backstops are designed for use in external high-speed backstopping applications. The BRUS is drop-in-ready and has a unique torque arm design that allows for backstop or torque arm replacement only during maintenance. BRUS series backstops ship pre-lubricated with grease.

Example How to Order Code: BRUS Series Backstop

BRUS	90	-	6.5000

Series	Frame Size	–	Available Bore Range	
BRUS: Backstop type	45	–	1.125" to 1.625"	(28.58 to 41.40 mm)
	60		1.750" to 2.250"	(44.45 to 57.15 mm)
	90		2.250" to 3.750"	(57.15 to 95.25 mm)
			When ordering, specify the required bore size, keyway dimensions, and overrunning direction.	

Specifications

Torque Capacity		Inner Race Overrunning (r/min)	
lb.ft.	(Nm)	Min.	Max.
700	(950)	400	3600
1770	(2400)	400	2400
(4420)	(6000)	400	1800

BRUS Series Installation

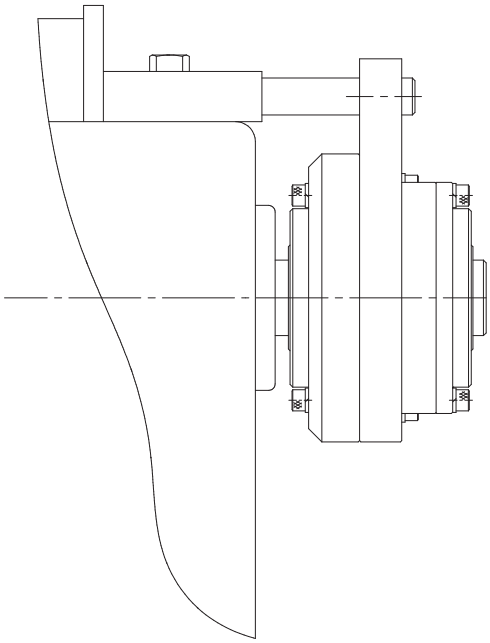

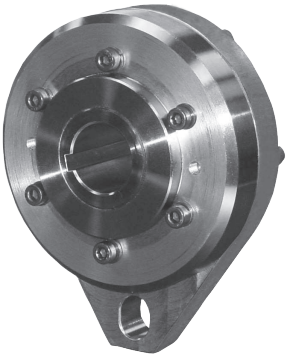

BRUS SERIES CAM CLUTCH

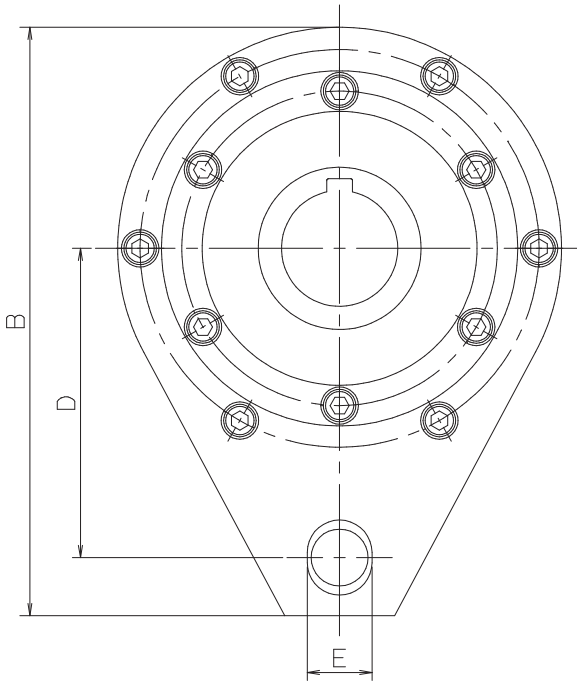

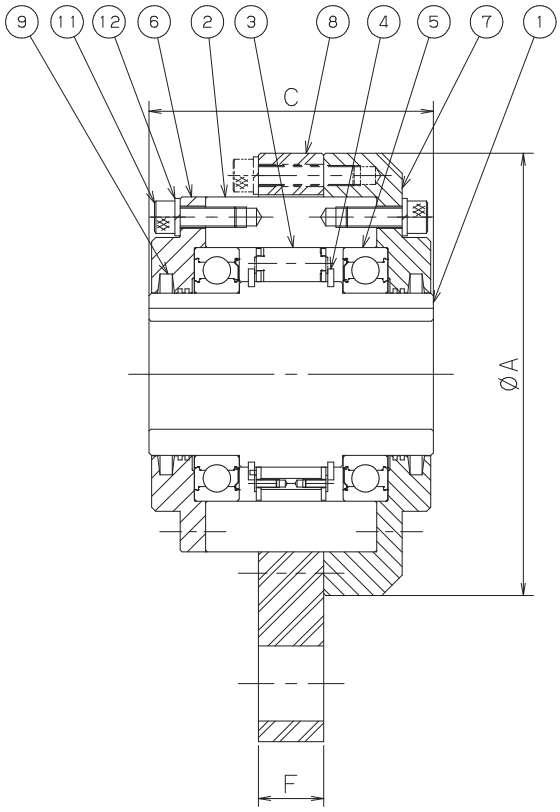

1 – Inner race
2 – Outer race
3 – Cam cage
4 – Snap ring
5 – Bearing
6 – Flange A
7 – Flange B
8 – Torque arm
9 – Dust seal
10 – Hollow hex bolt
11 – Spring washer

Dimensions and Capacities

Model	Torque Capacity lb.ft. (Nm)	Inner Race Overrunning Speed (r/min)		Bore Size in. (mm)		A in. (mm)	B in. (mm	C in. (mm)	D in. (mm)	E in. (mm)	F in. (mm)	Weight lbs. (kg)
		Min.	Max.	Min.	Max.							
BRUS45	700	400	3600	1.125	1.625	6.500	8.210	4.130	4.130	0.810	0.980	37.4
	(950)			(28.58)	(41.40)	(165)	(208.5)	(104.9)	(104.78)	(20.64)	(25)	(17)
BRUS60	1770	400	2400	1.750	2.250	8.580	11.420	5.500	6.000	1.250	1.260	77.0
	(2400)			(44.45)	(57.15)	(218)	(290)	(139.7)	(152.4)	(31.8)	(32)	(35)
BRUS90	4420	400	1800	2.250	3.750	11.650	15.080	6.500	7.750	1.880	1.500	176.0
	(6000)			(57.15)	(95.25)	(296)	(383)	(165.1)	(196.85)	(47.7)	(38)	(80)

BSEU SERIES CAM CLUTCH

BSEU Series Cam Clutch was developed as a user-friendly backstopping Cam Clutch. It has cam and roller construction which is the same as the smaller size BS Series Cam Clutch. The outer race has a special shape which combines the torque arm providing easy installation. These Cam Clutches are shipped pre-lubricated with grease and ready for installation. Most often used as a backstop in applications where limited space is available.

Example How to Order Code: BSEU Series Cam Clutch

BSEU	90	-	80
Series	Size		Bore

Series	Size		Bore
BSEU: Backstop type with integral torque arm	25	-	20
			25
	40	-	20
			25
			30
			35
			40
	70	-	45
			50
			55
			60
			65
			70
	90	-	75
			80
			85
			90

Specifications		
Torque Capacity		Overrunning Speed
lb.ft.	(Nm)	Max. r/min
159	(216)	500
159	(216)	500
1062	(1440)	450
1062	(1440)	450
1062	(1440)	450
1062	(1440)	450
1062	(1440)	450
2316	(3140)	350
2316	(3140)	350
2316	(3140)	350
2316	(3140)	350
2316	(3140)	350
2316	(3140)	350
3467	(4700)	250
3467	(4700)	250
3467	(4700)	250
3467	(4700)	250

Typical Installation 1

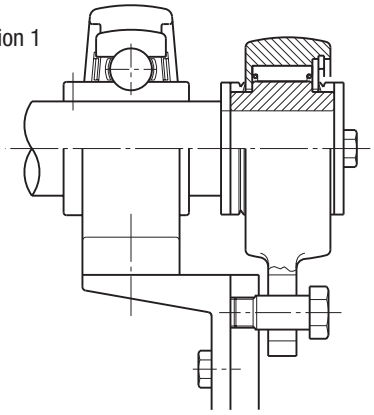

Typical Installation 2

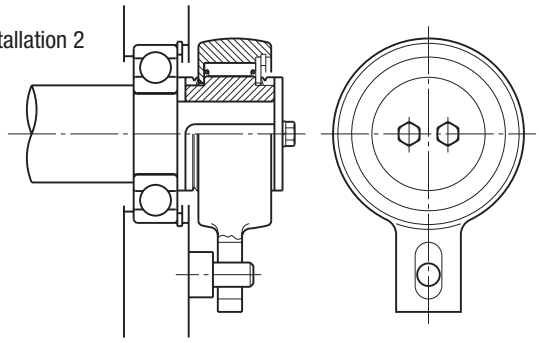

BSEU SERIES CAM CLUTCH

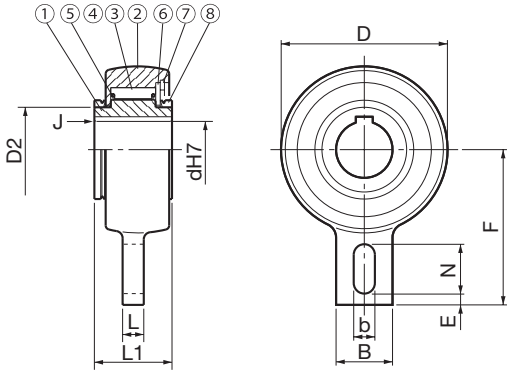

1 Inner race
2 Outer race
3 Cam
4 Roller
5 Spring
6 Plate
7 Snap ring
8 V-ring

Additional information including shaft and bore tolerances are found in the Engineering section starting on page 92.

Dimensions and Capacities

Model	Bore Size in. (mm)	Inner Race Keyway (mm)	D in. (mm)	D2 in. (mm)	L1 in. (mm)	L in. (mm)	B in. (mm)	F in. (mm)	b in. (mm)	N in. (mm)	E in. (mm)	J in. (mm)	Weight Max, lb. (kg)
BSEU25-20	0.787	6 x 2.8	3.268	1.654	1.378	0.472	1.575	3.543	0.591	1.378	0.197	0.039	2.2
	(20)		(83)	(42)	(35)	(12)	(40)	(90)	(15)	(35)	(5)	(1)	(1)
BSEU25-25	0.984	8 x 3.3	3.268	1.654	1.378	0.472	1.575	3.543	0.591	1.378	0.197	0.039	2.2
	(25)		(83)	(42)	(35)	(12)	(40)	(90)	(15)	(35)	(5)	(1)	(1)
BSEU40-20	0.787	6 x 2.8	4.646	2.362	2.165	0.591	1.575	4.331	0.591	1.378	0.315	0.059	8.4
	(20)		(118)	(60)	(55)	(15)	(40)	(110)	(15)	(35)	(8)	(1.5)	(3.8)
BSEU40-25	0.984	8 x 3.3	4.646	2.362	2.165	0.591	1.575	4.331	0.591	1.378	0.315	0.059	8.4
	(25)		(118)	(60)	(55)	(15)	(40)	(110)	(15)	(35)	(8)	(1.5)	(3.8)
BSEU40-30	1.181	8 x 3.3	4.646	2.362	2.165	0.591	1.575	4.331	0.591	1.378	0.315	0.059	8.4
	(30)		(118)	(60)	(55)	(15)	(40)	(110)	(15)	(35)	(8)	(1.5)	(3.8)
BSEU40-35	1.378	10 x 3.3	4.646	2.362	2.165	0.591	1.575	4.331	0.591	1.378	0.315	0.059	8.4
	(35)		(118)	(60)	(55)	(15)	(40)	(110)	(15)	(35)	(8)	(1.5)	(3.8)
BSEU40-40	1.575	12 x 3.3	4.646	2.362	2.165	0.591	1.575	4.331	0.591	1.378	0.315	0.059	8.4
	(40)		(118)	(60)	(55)	(15)	(40)	(110)	(15)	(35)	(8)	(1.5)	(3.8)
BSEU70-45	1.772	14 x 3.8	6.496	3.543	2.323	0.787	3.150	5.512	0.709	1.378	0.394	0.059	16.7
	(45)		(165)	(90)	(59)	(20)	(80)	(140)	(18)	(35)	(10)	(1.5)	(7.6)
BSEU70-50	1.969	14 x 3.8	6.496	3.543	2.323	0.787	3.150	5.512	0.709	1.378	0.394	0.059	16.7
	(50)		(165)	(90)	(59)	(20)	(80)	(140)	(18)	(35)	(10)	(1.5)	(7.6)
BSEU70-55	2.165	16 x 4.3	6.496	3.543	2.323	0.787	3.150	5.512	0.709	1.378	0.394	0.079	16.7
	(55)		(165)	(90)	(59)	(20)	(80)	(140)	(18)	(35)	(10)	(2)	(7.6)
BSEU70-60	2.362	18 x 4.4	6.496	3.543	2.323	0.787	3.150	5.512	0.709	1.378	0.394	0.079	16.7
	(60)		(165)	(90)	(59)	(20)	(80)	(140)	(18)	(35)	(10)	(2)	(7.6)
BSEU70-65	2.559	18 x 4.4	6.496	3.543	2.323	0.787	3.150	5.512	0.709	1.378	0.394	0.079	16.7
	(65)		(165)	(90)	(59)	(20)	(80)	(140)	(18)	(35)	(10)	(2)	(7.6)
BSEU70-70	2.756	20 x 4.9	6.496	3.543	2.323	0.787	3.150	5.512	0.709	1.378	0.394	0.079	16.7
	(70)		(165)	(90)	(59)	(20)	(80)	(140)	(18)	(35)	(10)	(2)	(7.6)
BSEU90-75	2.953	20 x 4.9	7.480	4.724	2.480	0.787	3.150	6.496	0.787	1.575	0.591	0.079	22.0
	(75)		(190)	(120)	(63)	(20)	(80)	(165)	(20)	(40)	(15)	(2)	(10)
BSEU90-80	3.150	22 x 5.4	7.480	4.724	2.480	0.787	3.150	6.496	0.787	1.575	0.591	0.079	22.0
	(80)		(190)	(120)	(63)	(20)	(80)	(165)	(20)	(40)	(15)	(2)	(10)
BSEU90-85	3.346	22 x 5.4	7.480	4.724	2.480	0.787	3.150	6.496	0.787	1.575	0.591	0.079	22.0
	(85)		(190)	(120)	(63)	(20)	(80)	(165)	(20)	(40)	(15)	(2)	(10)
BSEU90-90	3.543	25 x 5.4	7.480	4.724	2.480	0.787	3.150	6.496	0.787	1.575	0.591	0.079	22.0
	(90)		(190)	(120)	(63)	(20)	(80)	(165)	(20)	(40)	(15)	(2)	(10)

BS SERIES CAM CLUTCH

BS Series Cam Clutch products are designed to provide inner race overrunning capability in one direction of operation, and engage the outer race when reverse rotation is experienced. BS Series units are often found on incline conveyor systems or pump systems that may experience reverse rotation due to excessive loading on the discharge side of the pump. BS Series Cam Clutches are a cam and roller design incorporating the low friction bearing into the cam cage.

A complete Cam Clutch assembly typically includes the Cam Clutch, torque arm, shaft key, shaft end plate, and safety cover or oil reservoir. The shaft key is included with the Cam Clutch but please select each additional item individually as needed. These Cam Clutches are shipped pre-lubricated with grease and ready for installation.

How To Order: For the BS Series Cam Clutch that is needed, please specify the series, frame size, and bore size. If the bore size needed is not specified or if different key dimensions are required, please contact Tsubaki. Made-to-order Cam Clutches are readily available.

Series	Frame Size	–	Available Bore Range	Full Description
BS	30	–	1	**BS30 Cam Clutch with 1.000" bore including 1/4" wide key**

BS Series Cam Clutch Product Overview				
Series	Frame Size	–	Available Bore Range	
BS: Backstop Cam Clutch	30	–	0.750" to 1.181"	(20 to 30 mm)
	50		1.125" to 2.000"	(28.58 to 50.8 mm)
	65		1.500" to 2.559"	(38.1 to 65 mm)
	75		1.938" to 2.953"	(49.2 to 75 mm)

Specifications		
Torque Capacity		Overrunning Max. RPM
lb.ft.	(Nm)	
217	(294)	350
578	(784)	300
1158	(1570)	340
1807	(2450)	300

BS30 - BS75 SERIES CAM CLUTCH

Example How To Order Code: BS Series Cam Clutch

BS	30	-	1B
Series	Frame Size	-	Bore Symbol
BS: Backstop Cam Clutch	30	-	L
			P
			1
			1B
			30
	50		1D
			1F
			1G
			1H
			1J
			1L
			45
			1P
			50
			2
	65	-	1H
			40
			1J
			1L
			45
			1P
			50
			2
			2B
			55
			2D
			60
			2G
			2H
			65
	75	-	1R
			2
			2B
			2D
			60
			2G
			2H
			65
			2J
			2L
			70
			2P
			2R
			75

The bore sizes listed below are standards.
Special bore and keyway sizes are available upon request.

Specifications				
Bore Size		Bore Keyseat	Torque Capacity	
inch	(mm)		lb.ft.	(Nm)
0.750	(19.05)	3/16 x 3/32"	217	(294)
0.875	(22.23)	3/16 x 3/32"		
1.000	(25.40)	1/4 x 1/8"		
1.125	(28.58)	1/4 x 1/8"		
1.181	(30)	8 x 3.3 mm		
1.250	(31.75)	1/4 x 1/8"	578	(784)
1.375	(34.93)	5/16 x 5/32"		
1.438	(36.51)	3/8 x 3/16"		
1.500	(38.10)	3/8 x 3/16"		
1.625	(41.28)	3/8 x 3/16"		
1.750	(44.45)	3/8 x 3/16"		
1.771	(45)	14 x 3.8 mm		
1.875	(47.63)	1/2 x 1/4"		
1.968	(50)	14 x 3.8 mm		
2.000	(50.80)	1/2 x 1/4"		
1.500	(38.10)	3/8 x 3/16"	1158	(1570)
1.575	(40)	12 x 3.3 mm		
1.625	(41.28)	3/8 x 3/16"		
1.750	(44.45)	3/8 x 3/16"		
1.771	(45)	14 x 3.8 mm		
1.875	(47.63)	1/2 x 1/4"		
1.969	(50)	14 x 3.8 mm		
2.000	(50.80)	1/2 x 1/4"		
2.125	(53.98)	1/2 x 1/4"		
2.165	(55)	16 x 4.3 mm		
2.250	(57.15)	1/2 x 1/4"		
2.362	(60)	18 x 4.4 mm		
2.438	(61.91)	5/8 X 5/16"		
2.500	(63.50)	5/8 X 5/16"		
2.559	(65)	18 x 4.4 mm		
1.938	(49.2)	1/2 x 1/4"	1807	(2450)
2.000	(50.8)	1/2 x 1/4"		
2.125	(53.98)	1/2 x 1/4"		
2.250	(57.15)	1/2 x 1/4"		
2.362	(60)	18 x 4.4 mm		
2.438	(61.91)	5/8 x 5/16"		
2.500	(63.50)	5/8 x 5/16"		
2.559	(65)	18 x 4.4 mm		
2.625	(66.68)	5/8 x 5/16"		
2.750	(69.85)	5/8 x 5/16"		
2.755	(70)	20 x 4.9 mm		
2.875	(73.03)	3/4 x 3/8"		
2.938	(74.61)	3/4 x 3/8"		
2.952	(75)	20 x 4.9 mm		

BS30 - BS75 SERIES DIMENSIONS

BS30~135

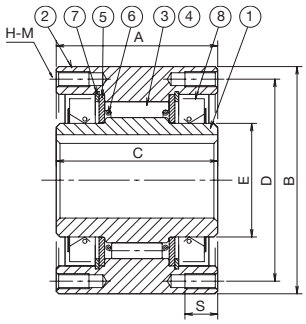

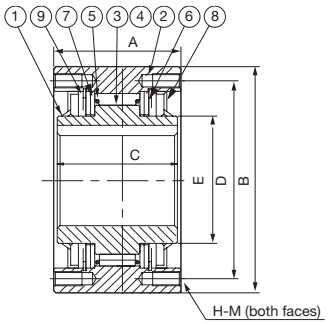

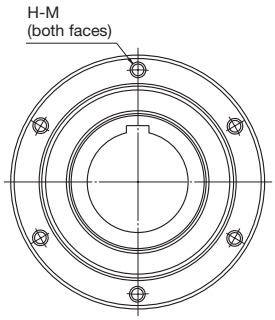

BS30 to BS50

1 Inner race
2 Outer race
3 Cam
4 Roller
5 Plate
6 Spring
7 Spirolox
8 Oil seal

BS65 to BS75

1 Inner race
2 Outer race
3 Cam
4 Roller
5 Spring
6 Plate
7 Thrust metal
8 Oil seal
9 Spirolox

Additional information including shaft and bore tolerances are found in the Engineering section starting on page 92.

Dimensions and Capacities

Model	Torque lb.ft. (Nm)	Inner Race Max. Overrunning Speed (RPM)	Drag Torque lb.ft. (Nm)	A in. (mm)	B in. (mm)	C in. (mm)	D PCD in. (mm)	E in. (mm)	S in. (mm)	H-M Size x Pitch No. of Tapped Holes	Weight* lb. (kg)
BS30	217	350	0.43	2.520	3.543	2.520	3.150	1.772	0.512	M6 XP1.0 (4)	5.1
	(294)		(0.58)	(64)	(90)	(64)	(80)	(45)	(13)		(2.3)
BS50	578	300	0.72	2.638	4.921	2.638	4.331	2.756	0.630	M8 x P1.25 (4)	10.3
	(784)		(0.98)	(67)	(125)	(67)	(110)	(70)	(16)		(4.7)
BS65	1158	340	2.89	3.543	6.299	3.346	5.512	3.543	0.787	M10 x P1.5 (6)	28.6
	(1570)		(3.92)	(90)	(160)	(85)	(140)	(90)	(20)		(13)
BS75	1807	300	4.34	3.543	6.693	3.346	5.906	3.937	0.787	M10 x P1.5 (6)	32.3
	(2450)		(5.88)	(90)	(170)	(85)	(150)	(100)	(20)		(14.7)

* Listed weight is for Cam Clutch with smallest bore. This is max. possible weight.

Chamfer of the Bore End Faces

Shaft Diameter		Chamfer	
Under 2"	(Under 50 mm)	0.06"	(1.5 mm)
2" thru 4-15/16"	(50 to 75 mm)	0.08"	(2 mm)

BS SERIES TORQUE ARM

Select applications may require the addition of a torque arm depending on how the Cam Clutch is to be mounted or implemented into the system. The following provides direction as to how to order a specific torque arm for a given Cam Clutch size and series.

Example How to Order Code: Example Model Number for BS Series Torque Arm

BS	30	TA

Series	Frame Size in mm*	Torque Arm
BS: Backstop type	30	**TA:** Torque arm
	50	
	65	
	75	

* Frame size listed is to be used with the applicable BS Series frame size listed on pages 82-84.

TORQUE ARM (OPTION)

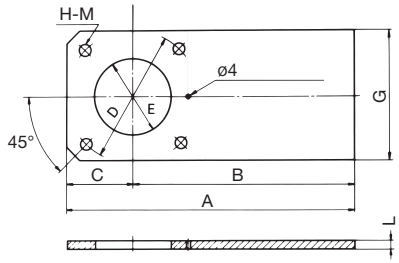

BS30TA • BS50TA

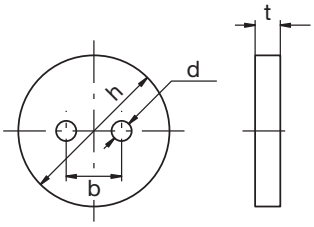

End Plate

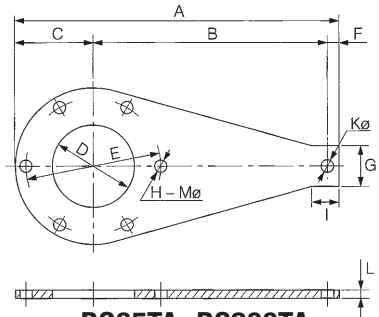

BS65TA~BS200TA

Single Torque Arm Style

Dimensions and Capacities

Torque Arm	A in. (mm)	B in. (mm)	C in. (mm)	D in. (mm)	E in. (mm)	F in. (mm)	G in. (mm)	I in. (mm)	K in. (mm)	L in. (mm)	H-M Qt. & Dia.	Weight lb. (kg)
BS30TA	6.614	5.118	1.496	3.150	2.165	-	2.953	-	-	0.236	4 - 6.6	1.1
	(168)	(130)	(38)	(80)	(55)		(75)			(6)		(0.5)
BS50TA	9.055	7.087	1.969	4.331	3.150	-	3.937	-	-	0.236	4-9	1.8
	(230)	(180)	(50)	(110)	(80)		(100)			(6)		(0.8)
BS65TA	12.047	8.268	3.150	5.512	3.543	0.630	1.969	1.181	0.531	0.236	6 - 11	2.6
	(306)	(210)	(80)	(140)	(90)	(16)	(50)	(30)	(13.5)	(6)		(1.2)
BS75TA	13.937	9.843	3.346	5.906	3.937	0.748	2.559	1.378	0.650	0.236	6 - 11	3.5
	(354)	(250)	(85)	(150)	(100)	(19)	(65)	(35)	(16.5)	(6)		(1.6)

End Plate Dimension Table:

Dimensions for end plates are for reference purposes only. Depending on the application, an end plate may or may not be required. Dimensions provided in the end plate dimensional table are intended to provide end users the ability to fabricate an end plate in the event one is needed.

Model	h in. (mm)	t in. (mm)	d in. (mm)	b in. (mm)	Bolt Size
BS30	1.772	0.177	0.236	0.394	M5
	(45)	(4.5)	(6)	(10)	
BS50	2.756	0.177	0.276	0.787	M6
	(70)	(4.5)	(7)	(20)	
BS65	3.543	3.543	0.236	0.374	M8
	(90)	(6)	(9.5)	(9.5)	
BS75	3.937	0.236	0.374	0.984	M8
	(100)	(6)	(9.5)	(25)	

BS-F SERIES BACKSTOPS

Tsubaki's new BS-F Series backstops are designed for simple, drop-in installations to all major competitive backstop products. These backstops use a unique seal design for maximum life with minimal maintenance. With Tsubaki's innovative design features, our backstops ensure efficient and dependable operation in the harshest environments. BS-F series backstop units are all manufactured on a made-to-order basis. When ordering, please specify bore size, keyway dimensions, overrunning rotation, and torque arm orientation. Tsubaki includes the shaft key with your BS-F backstop. If tolerances are not known, Tsubaki will produce per our standards. BS-F Series backstops are pre-lubricated with grease prior to shipping.

Example How To Order Code: BS-F Series Cam Clutch

BS	165	F	-	6.500

Series	Frame Size	Reservoir	-	Available Bore Range	
BS: Backstop type	85	**F:** F-Series	-	2.360" to 3.350"	(60 to 85 mm)
	95			2.750" to 3.740"	(70 to 95 mm)
	115			3.150" to 4.530"	(80 to 115 mm)
	140			3.540" to 5.510"	(90 to 140 mm)
	165			3.940" to 6.500"	(100 to 165 mm)
	200			3.940" to 7.870"	(100 to 200 mm)
	225			5.900" to 8.860"	(150 to 225 mm)
	250			6.880" to 9.840"	(175 to 250 mm)
	270			7.870" to 10.630"	(200 to 270 mm)
	300			9.050" to 11.810"	(230 to 300 mm)
	360			9.840" to 14.170"	(250 to 360 mm)
	425			12.790" to 16.730"	(325 to 425 mm)
	465			13.780" to 18.310"	(350 to 465 mm)

When ordering, specify the required bore size, keyway dimensions, and special tolerance if needed.

Specifications		
Torque Capacity		Overrunning Max. RPM
lb.ft.	(Nm)	
4980	(6760)	300
6590	(8940)	300
12000	(16300)	300
18000	(24400)	300
32500	(44100)	300
45500	(61700)	180
75200	(102000)	150
108000	(147000)	135
141000	(192000)	125
254000	(345000)	115
360000	(489000)	100
542000	(735000)	85
722000	(980000)	80

1 Inner race
2 Outer race
3 Cam cage
4 Thrust bearing
5 Side plate
6 Labyrinth plate
7 Torque arm
8 Pin
9 Oil seal
10 Labyrinth ring

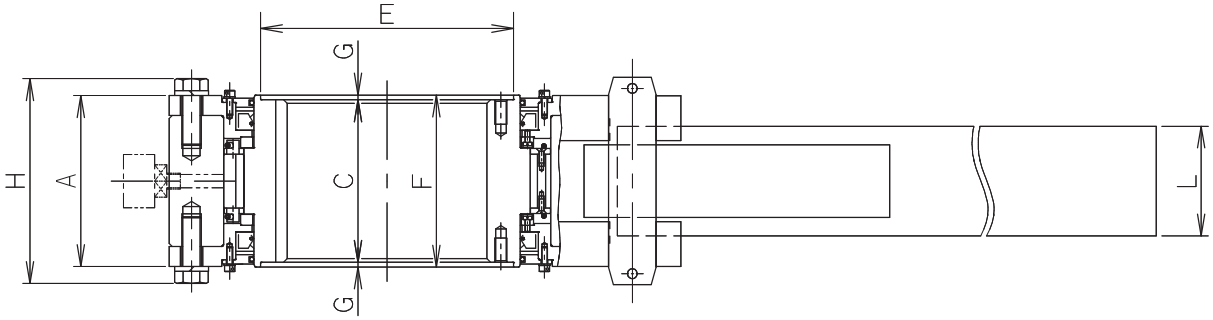

BS-F SERIES CAM CLUTCH DIMENSIONS

11 Socket plug
12 Air breather
13 Cotter pin

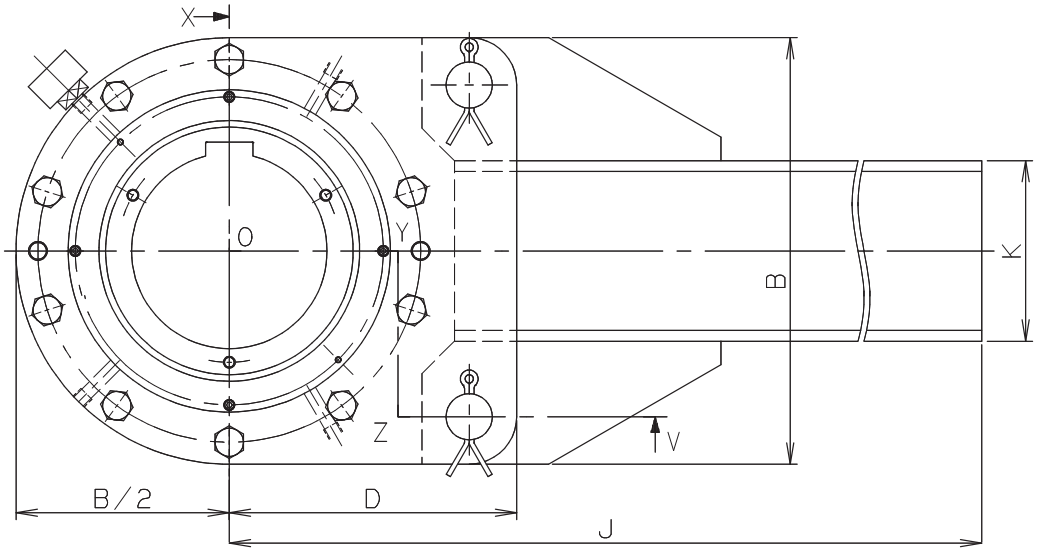

Dimensions and Capacities

MODEL	TORQUE lb.ft. (Nm)	INNER RACE MAX OVERRUN SPEED (RPM)	DRAG TORQUE lb.ft. (Nm)	A in. (mm)	B in. (mm)	C in. (mm)	D in. (mm)	E in. (mm)	F in. (mm)	G in. (mm)	H in. (mm)	J in. (mm)	K in. (mm)	L in. (mm)	AMOUNT OF GREASE lbs. (kg)	WEIGHT* lbs. (kg)
BS85F	4980	300	6.00	4.210	8.270	4.130	5.940	4.170	4.720	0.300	5.000	32.010	2.990	2.520	0.140	94.6
	(6760)		(8.0)	(107)	(210)	(105)	(151)	(106)	(120)	(7.5)	(127)	(813)	(76)	(64)	(0.065)	(43
BS95F	6590	300	7.37	4.210	9.060	4.410	6.340	4.720	4.720	0.160	5.000	35.980	4.020	2.800	0.170	114.4
	(8940)		(10.0)	(107)	(230)	(112)	(161)	(120)	(120)	(4)	(127)	(914)	(102)	(71)	(0.075)	(52)
BS115F	12000	300	11.05	5.000	10.630	5.000	7.130	5.590	5.310	0.160	5.870	50.000	4.020	2.800	0.230	180.4
	(16300)		(15.0)	(127)	(270)	(127)	(181)	(142)	(135)	(4)	(149)	(1270)	(102)	(71)	(0.105)	(82
BS140F	18000	300	14.74	5.000	12.600	5.280	8.170	6.690	5.590	0.160	5.940	55.980	5.000	2.990	0.330	250.8
	(24400)		(20.0)	(127)	(320)	(134)	(207.5)	(170)	(142)	(4)	(151)	(1422)	(127)	(76)	(0.15)	(114)
BS165F	32500	300	25.06	5.550	14.170	5.280	9.550	8.230	5.590	0.160	6.650	65.980	5.980	3.580	0.350	382.8
	(44100)		(34.0)	(141)	(360)	(134)	(242.5)	(209)	(142)	(4)	(169)	(1676)	(152)	(91)	(0.16)	(174)
BS200F	45500	180	32.43	5.910	16.930	5.590	11.180	9.880	5.910	0.160	7.010	72.010	7.990	4.170	0.420	578.6
	(61700)		(44.0)	(150)	(430)	(142)	(284)	(251)	(150)	(4)	(178)	(1829)	(203)	(106)	(0.19)	(263)
BS225F	75200	150	54.54	10.120	19.690	7.990	12.800	10.630	10.550	1.280	11.540	77.990	10.000	4.650	2.860	1075.8
	(102000)		(74.0)	(257)	(500)	(203)	(325)	(270)	(268)	(32.5)	(293)	(1981)	(254)	(118)	(1.3)	(489)
BS250F	108000	135	68.54	9.720	23.620	9.020	15.160	11.810	10.710	0.850	11.140	82.010	12.010	5.000	3.080	1522.4
	(147000)		(93.0)	(247)	(600)	(229)	(385)	(300)	(272)	(21.5)	(283)	(2083)	(305)	(127)	(1.4)	(692
BS270F	141000	125	72.22	10.510	25.590	10.000	16.340	13.540	11.020	0.510	11.930	87.990	12.010	5.510	3.520	1955.8
	(192000)		(98.0)	(267)	(650)	(254)	(415)	(344)	(280)	(13)	(303)	(2235)	(305)	(140)	(1.6)	(889)
BS300F	254000	115	79.60	10.940	30.710	10.750	19.290	16.930	11.260	0.260	12.600	94.020	15.000	5.630	3.960	2860.0
	(345000)		(108.0)	(278)	(780)	(273)	(490)	(430)	(286)	(6.5)	(320)	(2388)	(381)	(143)	(1.8)	(1300)
BS360F	360000	100	115.71	11.500	36.610	10.940	23.030	19.290	11.260	0.160	13.580	100.000	17.990	5.980	4.180	4114
	(489000)		(157.0)	(292)	(930)	(278)	(585)	(490)	(286)	(4)	(345)	(2540)	(457)	(152)	(1.9)	(1870)
BS425F	542000	85	159.19	14.960	40.550	15.590	25.390	23.620	15.910	0.160	17.050	107.990	20.000	6.380	7.700	6776
	(735000)		(216.0)	(380)	(1030)	(396)	(645)	(600)	(404)	(4)	(433)	(2743)	(508)	(162)	(3.5)	(3080)
BS465F	722000	80	180.56	16.140	42.910	16.420	27.170	23.620	17.010	0.300	18.660	120.000	24.020	7.240	9.680	8294
	(980000)		(245.0)	(410)	(1090)	(417)	(690)	(600)	(432)	(7.5)	(474)	(3048)	(610)	(184)	(4.4)	(3770)

* Weight shown is for backstop with minimum bore.

BS/BS-F SERIES SAFETY COVER

This safety cover is specifically designed to fit the BS and BS-F Series Cam Clutch. The safety cover is intended to protect and cover the rotating portion of the Cam Clutch from debris and foreign objects entering the rotating portion of the unit.

Example How to Order Code: Example Model Number for BS/BS-F Series Safety Cover

BS	165	F	SC
Series	Frame Size in mm	Type	Safety Cover
BS: Backstop Type	30	**Blank:** Standard BS Series	SC: Safety Cover
	50		
	65		
	75		
	85	**F:** BS-F Series	
	95		
	115		
	140		
	165		
	200		
	225		
	250		
	270		
	300		
	360		
	425		
	465		

Cover Installed

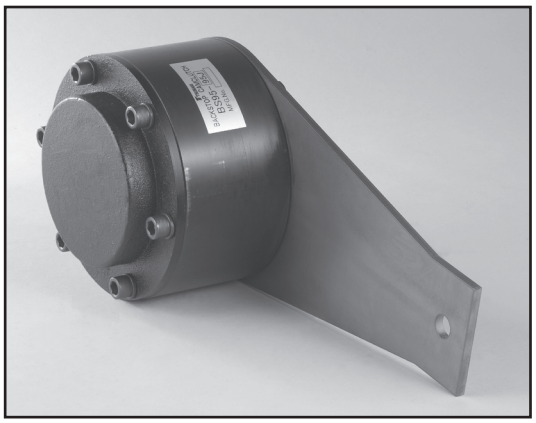

Contents Delivered

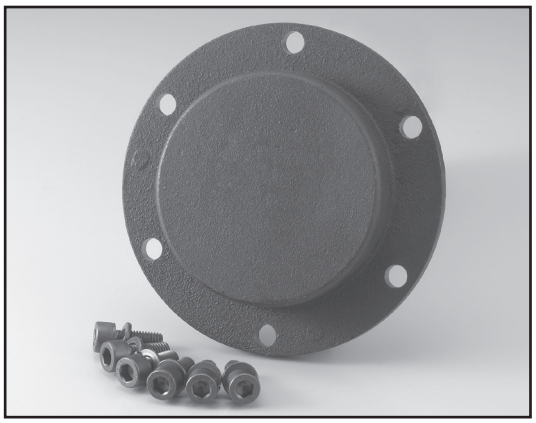

BS/BS-F SAFETY COVER

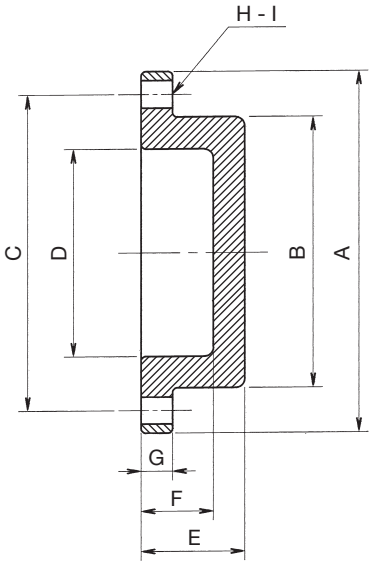

Installation example

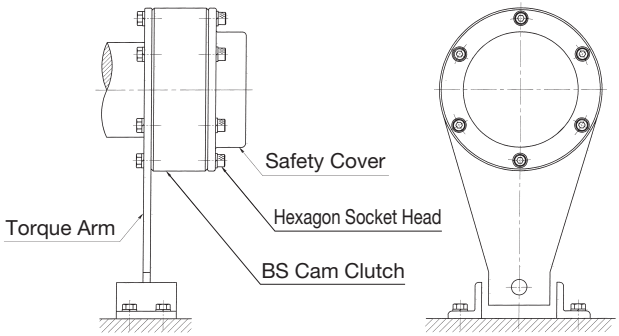

Dimensions and Capacities

Model	A in. (mm)	B in. (mm)	C in. (mm)	D in. (mm)	E in. (mm)	F in. (mm)	G in. (mm)	H - I in. (mm)	M.B.S. - (Qty).	Weight lbs. (kg)
BS30SC	3.543	2.362	3.150	1.890	0.945	0.709	0.276	4 - 0.26 (6.6)	M6 X 16 (4)	1.1
	(90)	(60)	(80)	(48)	(24)	(18)	(7)			(0.5)
BS50SC	4.921	3.346	4.331	2.874	1.063	0.827	0.276	4 - 0.35 (9)	M8 X 20 (4)	2.0
	(125)	(85)	(110)	(73)	(27)	(21)	(7)			(0.9)
BS65SC	6.299	4.331	5.512	3.780	1.299	1.024	0.315	6 - 0.43 (11)	M10 X25 (6)	3.7
	(160)	(110)	(140)	(96)	(33)	(26)	(8)			(1.7)
BS75SC	6.693	4.724	5.906	4.173	1.299	1.024	0.315	6 - 0.43 (11)	M10 X25 (6)	4.0
	(170)	(120)	(150)	(106)	(33)	(26)	(8)			(1.8)
BS85FSC	6.339	5.315	6.024	5.039	1.811	1.575	0.354	4 - 0.20 (5)	M4 X 20 (4)	3.2
	(161)	(135)	(153)	(128)	(46)	(40)	(9)			(1.4)
BS95FSC	6.929	5.906	6.614	5.630	2.205	1.969	0.354	4 - 0.20 (5)	M4 X 20 (4)	3.9
	(176)	(150)	(168)	(143)	(56)	(50)	(9)			(1.8)
BS115FSC	7.913	6.693	7.480	6.417	2.205	1.969	0.354	4 - 0.22 (5.5)	M5 X 18 (4)	5
	(201)	(170)	(190)	(163)	(56)	(50)	(9)			(2.3)
BS140FSC	9.134	7.874	8.661	7.598	2.598	2.362	0.354	4 - 0.22 (5.5)	M5 X 25 (4)	6.7
	(232)	(200)	(220)	(193)	(66)	(60)	(9)			(3.1)
BS165FSC	10.709	9.449	10.236	9.173	2.598	2.362	0.354	4 - 0.22 (5.5)	M5 X 20 (4)	8.8
	(272)	(240)	(260)	(233)	(66)	(60)	(9)			(4.0)
BS200FSC	12.598	11.220	12.008	10.945	2.598	2.362	0.354	4 - 0.26 (6.6)	M6 X 25 (4)	11.7
	(320)	(285)	(305)	(278)	(66)	(60)	(9)			(5.3)
BS225FSC	14.961	12.598	14.370	12.323	3.386	3.150	0.354	4 - 0.35 (9)	M8 X 25 (4)	17.4
	(380)	(320)	(365)	(313)	(86)	(80)	(9)			(7.9)
BS250FSC	17.323	14.173	16.339	13.898	3.386	3.150	0.354	4 - 0.35 (9)	M8 X 30 (4)	22.8
	(440)	(360)	(415)	(353)	(86)	(80)	(9)			(10.4)
BS270FSC	18.307	15.748	17.323	15.472	3.386	3.150	0.354	4 - 0.35 (9)	M8 X 32 (4)	24.8
	(465)	(400)	(440)	(393)	(86)	(80)	(9)			(11.3)
BS300FSC	22.835	19.685	21.850	19.409	3.386	3.150	0.354	4 - 0.43(11)	M10 X 32 (4)	37.1
	(580)	(500)	(555)	(493)	(86)	(80)	(9)			(16.9)
BS360FSC	25.591	22.441	24.606	22.165	3.780	3.543	0.354	4 - 0.55 (14)	M12 X 35 (4)	46.4
	(650)	(570)	(625)	(563)	(96)	(90)	(9)			(21.1)
BS425/ 465FSC	30.709	26.772	29.724	26.496	4.173	3.937	0.354	4 - 0.55 (14)	M12 X 40 (4)	66.3
	(780)	(680)	(755)	(673)	(106)	(100)	(9)			(30.1)

CA SERIES

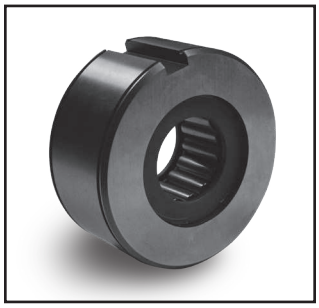

The CA series backstops are designed to be an integral part of the reducer. The unique non-rollover style cams prevent damage to gears, shafts, and drive train. This extends the life of the reducer and other system components while also ensuring proper performance. The CA series backstops are drop-in replacements for Dodge® reducers. CA series backstops ship pre-lubricated.

CA Series Cam Clutch Dimensions and Capacities

Dimensions and Capacities				
Tsubaki Part Number	Bore Size in. (mm)	Width in. (mm)	Diameter in. (mm)	Weight lbs. (kg)
211CA–0.738	0.738	0.886	1.85	0.57
	(18.750)	(22.550)	(47.00)	(0.26)
212CA–0.889	0.889	1.189	2.44	1.37
	(22.583)	(30.200)	(62.00)	(0.63)
214CA–1.052	1.052	1.062	2.834	1.64
	(26.723)	(26.988)	(72.00)	(0.75)
216CA–1.215	1.215	1.437	3.149	2.71
	(30.836)	(36.513)	(80.00)	(1.23)
217CA–1.296	1.296	1.062	3.149	1.95
	(32.931)	(26.988)	(80.00)	(0.89)
F227CA–1.500A	1.500	1.062	3.936	3.14
	(38.100)	(26.988)	(100.00)	(1.43)
F227CA–1.500B	1.500	1.062	3.936	3.14
	(38.100)	(26.988)	(100.00)	(1.43)
F233CA–1.750A	1.750	1.062	4.499	4.07
	(44.450)	(26.988)	(114.30)	(1.85)
F233CA–1.750B	1.750	1.563	4.499	6.27
	(44.450)	(39.688)	(114.30)	(2.85)

Dodge® is a registred trademark of Baldor Electric Company Corporation.

CA SERIES

Cross-Reference Chart								
Tsubaki CA Series Part Number	DODGE® Part Number	Current TXT Series Housing Redesign 2005	Obsolete TXT Series		TDT Series		TD Series	
211CA–0.738	243106	TXT309B TXT315B TXT325B	TXT309A TXT315A TXT325A		—		—	
212CA–0.889	244106	TXT409B TXT415B TXT425B	TXT409A TXT415A TXT425A		—		—	
214CA–1.052	244148	—	TXT405 TXT419 TXT415 TXT425		—		—	
216CA–1.215	245154	TXT509C TXT515C TXT525C	TXT509 TXT509A TXT509B TXT515	TXT515A TXT515B TXT525 TXT525A TXT525B	—		—	
217CA–1.296	246101	—	TXT505 TXT505A		T15		—	
F227CA–1.500A	246092	TXT609A TXT615A TXT625A	TXT605 TXT609 TXT615 TXT625		TDT615A TDT625A T16		TDT615 TDT625 TDT615A TDT625A	
F227CA–1.500B	247260 (247092)	TXT709A TXT715A TXT725A	TXT705 TXT709 TXT715 TXT725		TDT715 TDT725 T17		TDT715 TDT725 TDT715A TDT725A	
F233CA–1.750A	249260 (248101) (250101)	TXT815A TXT825A TXT15A TXT926A	TXT815 TXT825 TXT915 TXT926		TXT815 TXT825 TXT915	TXT926 TDT1115 TDT1125	TD815 TD825 TD815A TD825A	TD915 TD1115 TD1125
F233CA–1.750B	250260	TXT1015A TXT1024A	TXT805 TXT1015 TXT1024	TXT1215 TXT1225	TD1015 TDT1024 T18	TDT1215 TDT1225	TD1015 TD1024	TDT1215 TDT1225

Overrunning Clutch Selection Guide

ENGINEERING SECTION INDEX

Interchange Chart
Shaft Tolerance Guide
BB Series Guidelines
BR-HT Series guidelines
BUS200 Series Guidelines
PBUS Series Guidelines
TSS and TFS Series Guidelines
ISO Hub/Bore Tolerances
ISO Shaft Tolerances
Lubrication and Maintenance Guidelines
Metric Equivalents, Conversions, and Keyways
Cam Clutch Calculated Wear Life
BREU/BR-HT/BRUS Wear Life
Cam Clutch Service Wear Life Charts
Overrunning Application Request Form
Backstop Application Request Form
Warning Statement

Interchange Chart*

TSUBAKI Equivalent	Morse®	Falk®	Formsprag USA®	Marland®	Renold®	Ringspann®	Stieber®
BB	KK		CSK	CSK	REUK	ZZ	CSK(KK)
BB-GD	KK-2GD		CSK…2RS	CSK2RS	REUK2RS	ZZ-2RS	CSK..2RS
BB-K	KK-1K		CSK-P	CSK-P	REUKC	ZZ-P	CSK..P
BB-KK	KK-2K		CSK-PP	CSK-PP	REUKCC	ZZ-PP	CSK..PP
BREU			RIZ, RINZ			BM-X	RIZ, RINZ
BR-HT			RSBI, RSCI			FXM	RSBI, RSCI
BRUS		BIF	FHB			FRXF	
BS & BS-F	CB	NRT, NRTH	LLH	MA, IBS	SH, SLH	FRH	
BSEU			RSBW		REGV	FA	AV, RSBW
BUS200	B200A		FS20	R200	DM	RC	S200
MGUS	MG-A		FSO	RMS	SO	FB, FRS	FSO
MGUS-R			HSB				
MIUS	MI-A		HPI	RMS	SX	FRS	HPI
MZ, MZ-C			FWW				SMZ
MZEU, MZEU-K	MZEU		AL, ALPM		REGL, REGLP	FBF, FGR	AL, ALP, GFR, GFRN
OB SERIES			CDU	CEUS			AL..G
PBUS	PB-A		FSR	FSR	SB		
TFS	NFS		ASNU		REUSNU	FSN	ASNU, NFS
TSS	NSS		AS	AS	REUS	FCN	AS, NSS

* The interchange chart above is to be used as a general guide when looking to interchange clutches.
Full technical product specifications should be verified to confirm suitability.

Dodge® is a registred trademark of Baldor Electric Company Corporation. Falk® is a registered trademark of Rexnord Industries, LLC. Morse® is a registered trademark of BorgWarner Inc. Corporation Delaware. Formsprag® is a registered trademark of WARNER ELECTRIC TECHNOLOGY LLC LIMITED LIABILITY COMPANY DELAWARE. Marland® is a registered trademark of FORMSPRAG LLC LIMITED LIABILITY COMPANY DELAWARE. Renold® is a registered trademark of Renold Public Limited Company PUBLIC LIMITED COMPANY UNITED KINGDOM. Ringspann® is a registered trademark of RINGSPANN sGmBH FED REP GERMANY. Stieber® is a registered trademark of ALTRA INDUSTRIAL MOTION CORP CORPORATION DELAWARE.

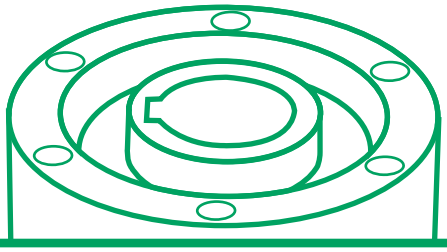

SHAFT TOLERANCE GUIDE

Different series of Cam Clutches require different shaft tolerances to perform at their optimum. Please use the chart that corresponds with the Cam Clutch series being used.

The chart below applies to:

BR-HT series
BREU series
BRUS Series
BS Series
BSEU Series
BS-F Series
MGUS Series
MGUS-R Series
MIUS Series
MZ Series
MZEU Series
TFS Series
TSS Series

Recommended Bore and Shaft Tolerance	
Clutch Bore	Shaft Fit Guide
0 to 1.20 inches dia. 0 to 30 mm dia.	Line fit to .0008 inches loose (0.020 mm)
1.20 to 2.00 inches dia. 30 mm to 50 mm dia.	Line fit to .0010 inches loose (0.025 mm)
2.00 to 3.15 inches dia. 50 mm to 80 mm dia.	Line fit to .0012 inches loose (0.030 mm)
3.15 to 4.70 inches dia. 80 mm to 120 mm dia.	Line fit to .0014 inches loose (0.036 mm)
4.70 to 7.10 inches dia. 120 mm to 180 mm dia.	Line fit to .0016 inches loose (0.041 mm)
7.10 to 9.85 inches dia. 180 mm to 250 mm dia.	Line fit to .0018 inches loose (0.046 mm)
9.85 to 12.40 inches dia. 250 mm to 315 mm dia.	Line fit to .0020 inches loose (0.051 mm)
12.40 to 15.70 inches dia. 315 mm to 400 mm dia.	Line fit to .0023 inches loose (0.058 mm)
15.70 to 17.72 inches dia. 400 mm to 450 mm dia.	Line fit to .0025 inches loose (0.064 mm)

PBUS Series tolerance - see page 96
BUS200 Series tolerance - see page 95
BB Series tolerance - see page 94
BR-HT Series additional tolerances - see page 95
TSS and TFS Series additional tolerances - see page 96

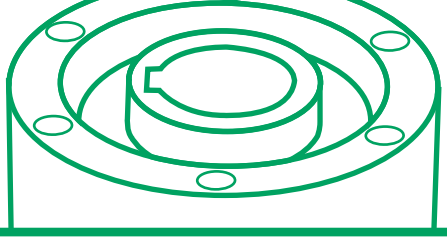

BB SERIES TOLERANCE KEYS AND KEYWAYS

Machine the shaft and housing to the measurements and tolerances given in the table below. Torque is transmitted by press fit, for models without keyways. Clutch may slip if the shaft and housing are not machined to the recommended dimensions.

Tolerance for Shaft and Housing

Model No.	Recommended Shaft Dia. Inch (mm)	Recommended Housing Bore Dia. Inch (mm)
BB15 / BB15GD	0.5910 / 0.5915 (15.012 / 15.023)	1.3769 / 1.3775 (34.972 / 34.988)
BB17 / BB17GD	0.6698 / 0.6702 (17.012 / 17.023)	1.5737 / 1.5743 (39.972 / 39.988)
BB20 / BB20GD	0.7880 / 0.7885 (20.015 / 20.028)	1.8493 / 1.8499 (46.972 / 46.988)
BB25 / BB25GD	0.9848 / 0.9854 (25.015 / 25.028)	2.0459 / 2.0467 (51.967 / 51.986)
BB30 / BB30GD	1.1817 / 1.1822 (30.015 / 30.028)	2.4396 / 2.4404 (61.967 / 61.986)
BB35 / BB35GD	1.3786 / 1.3793 (35.017 / 35.033)	2.8333 / 2.8341 (71.967 / 71.986)
BB40 / BB40GD	1.5755 / 1.5761 (40.017 / 40.033)	3.1483 / 3.1491 (79.967 / 79.986)

Tolerance for Shaft and Housing

Model No.	Recommended Shaft Dia. Inch (mm)	Recommended Housing Bore Dia.	
		BB__K BB__GDK	BB__KK
BB15K, KK, GDK	0.5894 / 0.5902 (14.972 / 14.992)	1.3769 / 1.3775 (34.972 / 34.988)	1.3772 / 1.3779 (34.982 / 34.998)
BB17K, KK, GDK	0.6682 / 0.6690 (16.972 / 16.992)	1.5737 / 1.5743 (39.972 / 39.988)	1.5741 / 1.5747 (39.982 / 39.998)
BB20K, KK, GDK	0.6681 / 0.6689 (19.969 / 16.990)	1.8493 / 1.8499 (46.972 / 46.988)	1.8495 / 1.8503 (46.978 / 46.997)
BB25K, KK, GDK	0.9830 / 0.9839 (24.969 / 24.990)	2.0459 / 2.0467 (51.967 / 51.986)	2.0464 / 2.0471 (51.978 / 51.997)
BB30K, KK, GDK	1.1799 / 1.1807 (29.969 / 29.990)	2.4396 / 2.4404 (61.967 / 61.986)	2.4401 / 2.4408 (61.978 / 61.997)
BB35K, KK, GDK	1.3765 / 1.3775 (34.963 / 34.988)	2.8333 / 2.8341 (71.967 / 71.986)	2.8337 / 2.8344 (71.975 / 71.994)
BB40K, KK, GDK	1.5733 / 1.5743 (39.963 / 39.988)	3.1483 / 3.1491 (79.967 / 79.986)	3.1486 / 3.1494 (79.975 / 79.994)

Dimensions in mm

Dimension of Keyways and Keys

Model		b2	t1	t2	b1	t	Inner Race Key b x h x length	Outer Race Key b' x h' x length
BB15K	BB15GDK	5.0	1.9	1.2	—	—	—	—
BB15KK	—				2.0	0.6	5 x 3 x 11	2 x 2 x 11
BB17K	BB17GDK	5.0	1.9	1.2	—	—	—	—
BB17KK	—				2.0	1.0	5 x 3 x 12	2 x 2 x 12
BB20K	BB20GDK	6.0	2.5	1.6	—	—	—	—
BB20KK	—				3.0	1.5	6 x 4 x 14	3 x 3 x 14
BB25K	BB25GDK	8.0	3.6	1.5	—	—	—	—
BB25KK	—				6.0	2.0	8 x 5 x 15	6 x 4 x 15
BB30K	BB30GDK	8.0	3.1	2.0	—	—	—	—
BB30KK	—				6.0	2.0	8 x 5 x 16	6 x 4 x 16
BB35K	BB35GDK	10.0	3.7	2.4	—	—	—	—
BB35KK	—				8.0	2.5	10 x 6 x 17	8 x 5 x 17
BB40K	BB40GDK	12.0	5.0	3.3	—	—	—	—
BB40KK	—				10.0	3.0	12 x 8 x 22	10 x 6 x 22

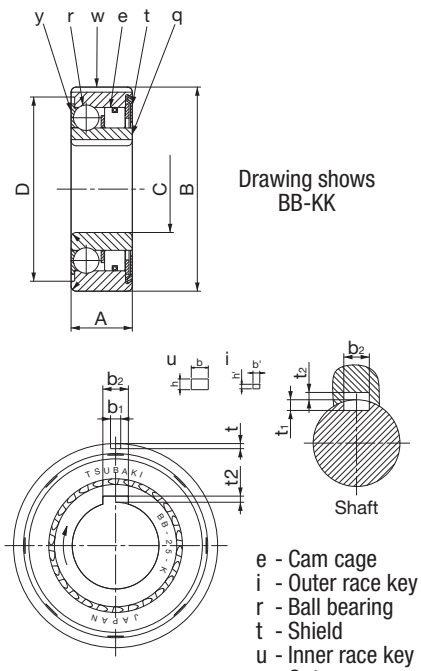

BR-HT SERIES GUIDELINES

Parallel Tolerances					
Model	Parallelism		Angularity		Recommended Shaft Tolerance
	inch	(mm)	inch	(mm)	
BR15HT to BR58HT	0.0039"	(0.10)	0.0016"	(0.04)	See page 92
BR60HR to BR98HT	0.0059"	(0.15)	0.0024"	(0.06)	
BR100HT and above	0.0098"	(0.25)	0.0032"	(0.08)	

Typical Installation 1

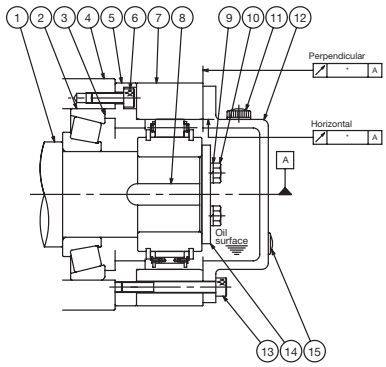

1 Mounting shaft
2 Bearing
3 Shim
4 Case
5 Adapter
6 Socket bolt
7 Cam Clutch
8 Key
9 Spring washer
10 Hex bolt
11 Oil plug (with air breather)
12 Cover
13 Socket bolt
14 End plate
15 Oil gauge

Typical Installation 2

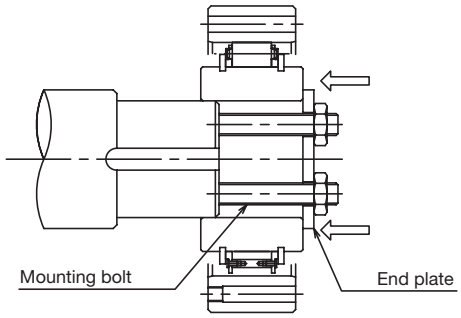

BUS200 SERIES GUIDELINES

- BUS200 Series Cam Clutch is shaft mounted, so the shaft on which the clutch is mounted must be hardened to Rc 56-60 and 0.059" (1.5 mm) case depth after grinding. Grind to 16 micro-inch finish.
- The taper of this shaft should not exceed 0.0002" per inch (0.01 mm per 50 mm).
- Mating keyway profile should be in accordance with ANSI B17.1-1967 (R 1998).
- BUS200 requires bearing support to maintain concentricity. Concentricity between the shaft and the housing bore should be less than 0.002" (0.05 mm) total indicator reading (TIR).
- BUS200 clutches have the same outside diameters as the bearings shown in the table on the specifications page. Bore tolerance of the housing in which the clutch is assembled should be within the range shown in the table below.

Model No.	Shaft Dia.	Housing Bore Dia.
BUS203	0.6490 / 0.6500 in	1.5748 / 1.5758 inch
	(16.485 / 16.510 mm)	(40.000 / 40.025 mm)
BUS204	0.7390 / 0.7400 inch	1.8504 / 1.8514 inch
	(18.771 / 18.796 mm)	(47.000 / 47.025 mm)
BUS205	0.9290 /0.9300 inch	2.0472 / 2.0484 inch
	(23.597 / 23.622 mm)	(52.000 / 52.030 mm)
BUS206	1.2890 / 1.2900 inch	2.4409 / 2.4421 inch
	(32.741 / 32.766 mm)	(62.000 / 62.030 mm)
BUS207	1.6560 / 1.6570 inch	2.8346 / 2.8353 inch
	(42.063 / 42.088 mm)	(72.000 / 72.030 mm)
BUS208	1.8400 / 1.8410 inch	3.1496 / 3.1508 inch
	(46.736 / 46.761 mm)	(80.000 / 80.030 mm)

Model No.	Shaft Dia.	Housing Bore Dia.
BUS209	1.8400 / 1.8410 inch\	3.3465 / 3.3478 inch
	(46.736 / 46.761 mm)	(85.000 / 85.035 mm)
BUS210	2.2080 / 2.2090 inch	3.5433 / 3.5447 inch
	(59.084 /56.109 mm)	(90.000 / 90.035 mm)
BUS211	2.2080 / 2.2090 inch	3.9370 / 3.9384 inch
	(56.084 / 56.109 mm)	(100.000 / 100.035 mm)
BUS212	2.7561 / 2.7570 inch	4.3307 / 4.3321 inch
	(70.004 / 70.029 mm)	(110.000 / 110.035 mm)
BUS213	2.7561 / 2.7570 inch	4.7244 / 4.7258 inch
	(70.004 / 70.029 mm)	(120.000 / 120.035 mm)
BUS214	3.1233 / 3.1243 inch	4.9213 / 4.9228 inch
	(79.331 / 79.356 mm)	(125.000 / 125.040 mm)

PBUS SERIES GUIDELINES

- Concentricity of the inner race and the outer race are maintained by the plain bearing located between the outer race and the shaft. Radial load which works on the outer race is also supported by this plain bearing. The shaft must therefore extend completely through the clutch and support the full length.
- Recommended shaft tolerances are as follows:

Model	Tolerance	
	inch.	(mm)
PBUS 3	+0 to –0.0005"	+0 to –0.013
PBUS 5	+0 to –0.0005"	+0 to –0.013
PBUS 6	+0 to –0.0005"	+0 to –0.013
PBUS 8	+0 to –0.0005"	+0 to –0.013
PBUS 10	+0 to –0.0006"	+0 to –0.016
PBUS 12	+0 to –0.0006"	+0 to –0.016
PBUS 14	+0 to –0.0006"	+0 to –0.016

- Do not use the PB Series Cam Clutch as a coupling. Use with a flexible coupling when connecting two shafts.
- Vertical mount Cam Clutch applications require special treatment, please contact Tsubaki.
- Thrust load should be supported by other devices, not by the Cam Clutch.
- The bore of the driven member, such as a sprocket on the clutch outer race, should be in accordance with specifications below.

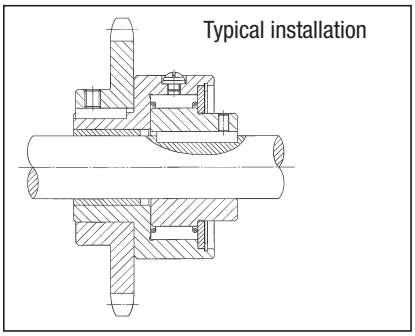

Model	Bore Diameter of Driven Member
PBUS 3	0.875/0.876 inches (22.225/22.250 mm)
PBUS 5	1.250/1.251 inches (31.750/31.775 mm)
PBUS 6	1.375/1.376 inches (34.925/34.950 mm)
PBUS 8	1.750/1.751 inches (44.450/44.475 mm)
PBUS10	2.250/2.251 inches (57.150/57.175 mm)
PBUS12	2.500/2.501 inches (63.500/63.525 mm)
PBUS14	2.875/2.876 inches (73.025/73.050 mm)

TSS AND TFS SERIES GUIDELINES

- TSS and TFS Series Cam Clutches are designed for press fit installations. Bearings are required for both series to support axial and radial loads. These are "open" design clutches, thus lubrication and external sealing is required.
- Correct interference dimensions of the outer race must be maintained to obtain maximum clutch performance. TSS Series has the same outside dimensions as the 62 Series ball bearings and the same housing tolerances should be maintained. TFS Series corresponds with the 63 Series ball bearings and similar machining tolerances are needed. In most applications, the TSS or TFS Cam Clutch is installed next to the bearing.
- TFS Series Cam Clutch has keyseats on the end faces; keyways should be added for installation. If TFS Series is used without locating keys in these end faces and is installed via a press fit, the internal diameter of the housing is to be a K6 tolerance.

Shaft and Housing Bore Tolerances			
TSS Series		TFS Series	
Housing bore:	H6, H7, or J7 tolerance	Housing bore:	H6, H7, or J7 tolerance (K6 if press fit)
Shaft diameter:	See page 93	Shaft diameter:	See page 93
Bearing support:	62 series	Bearing support:	63 series

Shaft and Housing Alignment Concentricity			
Series	Bore Range (mm)	Total Indicator Run-out (TIR)	
		inch.	(mm)
TSS and TFS	6 - 12	0.0008"	0.020 mm
TSS and TFS	15 - 25	0.0012"	0.030 mm
TSS and TFS	30 - 80	0.0020"	0.050 mm

HUB/BORE TOLERANCES

The two charts below, “metric” on the left and “inch” on the right, provide tolerances as listed in this catalog for bores and holes. As an example of how to use these charts, for a 5/8" (15.88 mm) bore, an acceptable H6 tolerance is -0/+0.0004" (-0/+0.011 mm). Stating differently, for a 5/8" (15.88 mm) bore, acceptable dimensions are 0.6250-0.6254" (15.880-15.891 mm). All dimensions are positive values unless marked.

Metric Tolerance Zones - Internal Dimensions (Holes) Unit: mm

Size		H6	H7	H8	J7	K6
OVER	0	0.006	0.010	0.014	+0.004	0.000
TO	3	0.000	0.000	0.000	-0.006	-0.006
OVER	3	0.008	0.012	0.018	+0.006	+0.002
TO	6	0.000	0.000	0.000	-0.006	-0.006
OVER	6	0.009	0.015	0.022	+0.008	+0.002
TO	10	0.000	0.000	0.000	-0.007	-0.007
OVER	10	0.011	0.018	0.027	0.010	+0.002
TO	14	0.000	0.000	0.000	-0.008	-0.009
OVER	14	0.011	0.018	0.027	0.010	+0.002
TO	18	0.000	0.000	0.000	-0.008	-0.009
OVER	18	0.013	0.021	0.033	+0.012	+0.002
TO	24	0.000	0.000	0.000	-0.009	-0.011
OVER	24	0.013	0.021	0.033	+0.012	+0.002
TO	30	0.000	0.000	0.000	-0.009	-0.011
OVER	30	0.016	0.025	0.039	0.014	+0.003
TO	40	0.000	0.000	0.000	-0.011	-0.013
OVER	40	0.016	0.025	0.039	0.014	+0.003
TO	50	0.000	0.000	0.000	-0.011	-0.013
OVER	50	0.019	0.030	0.046	0.018	+0.004
TO	65	0.000	0.000	0.000	-0.012	-0.015
OVER	65	0.019	0.030	0.046	0.018	+0.004
TO	80	0.000	0.000	0.000	-0.012	-0.015
OVER	80	0.022	0.035	0.054	0.022	+0.004
TO	100	0.000	0.000	0.000	-0.013	-0.018
OVER	100	0.022	0.035	0.054	0.022	+0.004
TO	120	0.000	0.000	0.000	-0.013	-0.018
OVER	120	0.025	0.040	0.063	0.026	+0.004
TO	140	0.000	0.000	0.000	-0.014	-0.021
OVER	140	0.025	0.040	0.063	0.026	+0.004
TO	160	0.000	0.000	0.000	-0.014	-0.021
OVER	160	0.025	0.040	0.063	0.026	+0.004
TO	180	0.000	0.000	0.000	-0.014	-0.021
OVER	180	0.029	0.046	0.072	0.030	+0.005
TO	200	0.000	0.000	0.000	-0.016	-0.024
OVER	200	0.029	0.046	0.072	0.030	+0.005
TO	225	0.000	0.000	0.000	-0.016	-0.024
OVER	225	0.029	0.046	0.072	0.030	+0.005
TO	250	0.000	0.000	0.000	-0.016	-0.024
OVER	250	0.032	0.052	0.081	+0.036	+0.005
TO	280	0.000	0.000	0.000	-0.016	-0.027
OVER	280	0.032	0.052	0.081	+0.036	+0.005
TO	315	0.000	0.000	0.000	-0.016	-0.027
OVER	315	0.036	0.057	0.089	0.039	+0.007
TO	355	0.000	0.000	0.000	-0.018	-0.029
OVER	355	0.036	0.057	0.089	0.039	+0.007
TO	400	0.000	0.000	0.000	-0.018	-0.029
OVER	400	0.040	0.063	0.097	+0.043	+0.008
TO	450	0.000	0.000	0.000	-0.020	-0.032
OVER	450	0.040	0.063	0.097	+0.043	+0.008
TO	500	0.000	0.000	0.000	-0.020	-0.032

Inch Tolerance Zones - Internal Dimensions (Holes) Unit: inch

Size		H6	H7	H8	J7	K6
OVER	0.0000	0.0002	0.0004	0.0006	0.0002	0.0000
TO	0.1181	0.0000	0.0000	0.0000	-0.0002	-0.0002
OVER	0.1181	0.0003	0.0005	0.0007	0.0002	0.0001
TO	0.2362	0.0000	0.0000	0.0000	-0.0002	-0.0002
OVER	0.2362	0.0004	0.0006	0.0009	0.0003	0.0001
TO	0.3937	0.0000	0.0000	0.0000	-0.0003	-0.0003
OVER	0.3937	0.0004	0.0007	0.0011	0.0004	0.0001
TO	0.5512	0.0000	0.0000	0.0000	-0.0003	-0.0004
OVER	0.5512	0.0004	0.0007	0.0011	0.0004	0.0001
TO	0.7087	0.0000	0.0000	0.0000	-0.0003	-0.0004
OVER	0.7087	0.0005	0.0008	0.0013	0.0005	0.0001
TO	0.9449	0.0000	0.0000	0.0000	-0.0004	-0.0004
OVER	0.9449	0.0005	0.0008	0.0013	0.0005	0.0001
TO	1.1811	0.0000	0.0000	0.0000	-0.0004	-0.0004
OVER	1.1811	0.0006	0.0010	0.0015	0.0006	0.0001
TO	1.5748	0.0000	0.0000	0.0000	-0.0004	-0.0005
OVER	1.5748	0.0006	0.0010	0.0015	0.0006	0.0001
TO	1.9685	0.0000	0.0000	0.0000	-0.0004	-0.0005
OVER	1.9685	0.0007	0.0012	0.0018	0.0007	0.0002
TO	2.5591	0.0000	0.0000	0.0000	-0.0005	-0.0006
OVER	2.5591	0.0007	0.0012	0.0018	0.0007	0.0002
TO	3.1496	0.0000	0.0000	0.0000	-0.0005	-0.0006
OVER	3.1496	0.0009	0.0014	0.0021	0.0009	0.0002
TO	3.9370	0.0000	0.0000	0.0000	-0.0005	-0.0007
OVER	3.9370	0.0009	0.0014	0.0021	0.0009	0.0002
TO	4.7244	0.0000	0.0000	0.0000	-0.0005	-0.0007
OVER	4.7244	0.0010	0.0016	0.0025	0.0010	0.0002
TO	5.5118	0.0000	0.0000	0.0000	-0.0006	-0.0008
OVER	5.5118	0.0010	0.0016	0.0025	0.0010	0.0002
TO	6.2992	0.0000	0.0000	0.0000	-0.0006	-0.0008
OVER	6.2992	0.0010	0.0016	0.0025	0.0010	0.0002
TO	7.0866	0.0000	0.0000	0.0000	-0.0006	-0.0008
OVER	7.0866	0.0011	0.0018	0.0028	0.0012	0.0002
TO	7.8740	0.0000	0.0000	0.0000	-0.0006	-0.0009
OVER	7.8740	0.0011	0.0018	0.0028	0.0012	0.0002
TO	8.8583	0.0000	0.0000	0.0000	-0.0006	-0.0009
OVER	8.8583	0.0011	0.0018	0.0028	0.0012	0.0002
TO	9.8425	0.0000	0.0000	0.0000	-0.0006	-0.0009
OVER	9.8425	0.0013	0.0020	0.0032	0.0014	0.0002
TO	11.0236	0.0000	0.0000	0.0000	-0.0006	-0.0011
OVER	11.0236	0.0013	0.0020	0.0032	0.0014	0.0002
TO	12.4016	0.0000	0.0000	0.0000	-0.0006	-0.0011
OVER	12.4016	0.0014	0.0022	0.0035	0.0015	0.0003
TO	13.9764	0.0000	0.0000	0.0000	-0.0007	-0.0011
OVER	13.9764	0.0014	0.0022	0.0035	0.0015	0.0003
TO	15.7480	0.0000	0.0000	0.0000	-0.0007	-0.0011
OVER	15.7480	0.0016	0.0025	0.0038	0.0017	0.0003
TO	17.7165	0.0000	0.0000	0.0000	-0.0008	-0.0013
OVER	17.7165	0.0016	0.0025	0.0038	0.0017	0.0003
TO	19.6850	0.0000	0.0000	0.0000	-0.0008	-0.0013

SHAFT TOLERANCES

The two charts below, “metric” on the left and “inch” on the right, provide tolerances as listed in this catalog for shaft dimensions. As an example of how to use these charts, for a 1" (25.4 mm) shaft, an acceptable h8 tolerance is -0.0013/+0" (-0.033/+0 mm). Stating differently, for a 1" (25.4 mm) bore, acceptable dimensions are 0.9987-1.0000" (25.367-25.400 mm). All dimensions are positive values unless marked.

Metric Tolerance Zones - External Dimensions (Shafts) Unit: mm

Size		f7	h6	h7	h8	j6
OVER	0	-0.006	0.000	0.000	0.000	0.004
TO	3	-0.016	-0.006	-0.010	-0.014	-0.002
OVER	3	-0.010	0.000	0.000	0.000	0.006
TO	6	-0.022	-0.008	-0.012	-0.018	-0.002
OVER	6	-0.013	0.000	0.000	0.000	0.007
TO	10	-0.028	-0.009	-0.015	-0.022	-0.002
OVER	10	-0.016	0.000	0.000	0.000	0.008
TO	14	-0.034	-0.011	-0.018	-0.027	-0.003
OVER	14	-0.016	0.000	0.000	0.000	0.008
TO	18	-0.034	-0.011	-0.018	-0.027	-0.003
OVER	18	-0.020	0.000	0.000	0.000	0.009
TO	24	-0.041	-0.013	-0.021	-0.033	-0.004
OVER	24	-0.020	0.000	0.000	0.000	0.009
TO	30	-0.041	-0.013	-0.021	-0.033	-0.004
OVER	30	-0.025	0.000	0.000	0.000	0.011
TO	40	-0.050	-0.016	-0.025	-0.039	-0.005
OVER	40	-0.025	0.000	0.000	0.000	0.011
TO	50	-0.050	-0.016	-0.025	-0.039	-0.005
OVER	50	-0.030	0.000	0.000	0.000	0.012
TO	65	-0.060	-0.019	-0.030	-0.046	-0.007
OVER	65	-0.030	0.000	0.000	0.000	0.012
TO	80	-0.060	-0.019	-0.030	-0.046	-0.007
OVER	80	-0.036	0.000	0.000	0.000	0.013
TO	100	-0.071	-0.022	-0.035	-0.054	-0.009
OVER	100	-0.036	0.000	0.000	0.000	0.013
TO	120	-0.071	-0.022	-0.035	-0.054	-0.009
OVER	120	-0.043	0.000	0.000	0.000	0.014
TO	140	-0.083	-0.025	-0.040	-0.063	-0.011
OVER	140	-0.043	0.000	0.000	0.000	0.014
TO	160	-0.083	-0.025	-0.040	-0.063	-0.011
OVER	160	-0.043	0.000	0.000	0.000	0.014
TO	180	-0.083	-0.025	-0.040	-0.063	-0.011
OVER	180	-0.050	0.000	0.000	0.000	0.016
TO	200	-0.096	-0.029	-0.046	-0.072	-0.013
OVER	200	-0.050	0.000	0.000	0.000	0.016
TO	225	-0.096	-0.029	-0.046	-0.072	-0.013
OVER	225	-0.050	0.000	0.000	0.000	0.016
TO	250	-0.096	-0.029	-0.046	-0.072	-0.013
OVER	250	-0.056	0.000	0.000	0.000	0.016
TO	280	-0.108	-0.032	-0.052	-0.081	-0.016
OVER	280	-0.056	0.000	0.000	0.000	0.016
TO	315	-0.108	-0.032	-0.052	-0.081	-0.016
OVER	315	-0.062	0.000	0.000	0.000	0.018
TO	355	-0.119	-0.036	-0.057	-0.089	-0.018
OVER	355	-0.062	0.000	0.000	0.000	0.018
TO	400	-0.119	-0.036	-0.057	-0.089	-0.018
OVER	400	-0.068	0.000	0.000	0.000	0.020
TO	450	-0.131	-0.040	-0.063	-0.097	-0.020
OVER	450	-0.068	0.000	0.000	0.000	0.020
TO	500	-0.131	-0.040	-0.063	-0.097	-0.020

Inch Tolerance Zones - Internal Dimensions (Shafts) Unit: inch

Size		f7	h6	h7	h8	j6
OVER	0.0000	-0.0002	0.0000	0.0000	0.0000	0.0002
TO	0.1181	-0.0006	-0.0002	-0.0004	-0.0006	-0.0001
OVER	0.1181	-0.0004	0.0000	0.0000	0.0000	0.0002
TO	0.2362	-0.0009	-0.0003	-0.0005	-0.0007	-0.0001
OVER	0.2362	-0.0005	0.0000	0.0000	0.0000	0.0003
TO	0.3937	-0.0011	-0.0004	-0.0006	-0.0009	-0.0001
OVER	0.3937	-0.0006	0.0000	0.0000	0.0000	0.0003
TO	0.5512	-0.0013	-0.0004	-0.0007	-0.0011	-0.0001
OVER	0.5512	-0.0006	0.0000	0.0000	0.0000	0.0003
TO	0.7087	-0.0013	-0.0004	-0.0007	-0.0011	-0.0001
OVER	0.7087	-0.0008	0.0000	0.0000	0.0000	0.0004
TO	0.9449	-0.0016	-0.0005	-0.0008	-0.0013	-0.0002
OVER	0.9449	-0.0008	0.0000	0.0000	0.0000	0.0004
TO	1.1811	-0.0016	-0.0005	-0.0008	-0.0013	-0.0002
OVER	1.1811	-0.0010	0.0000	0.0000	0.0000	0.0004
TO	1.5748	-0.0020	-0.0006	-0.0010	-0.0015	-0.0002
OVER	1.5748	-0.0010	0.0000	0.0000	0.0000	0.0004
TO	1.9685	-0.0020	-0.0006	-0.0010	-0.0015	-0.0002
OVER	1.9685	-0.0012	0.0000	0.0000	0.0000	0.0005
TO	2.5591	-0.0024	-0.0007	-0.0012	-0.0018	-0.0003
OVER	2.5591	-0.0012	0.0000	0.0000	0.0000	0.0005
TO	3.1496	-0.0024	-0.0007	-0.0012	-0.0018	-0.0003
OVER	3.1496	-0.0014	0.0000	0.0000	0.0000	0.0005
TO	3.9370	-0.0028	-0.0009	-0.0014	-0.0021	-0.0004
OVER	3.9370	-0.0014	0.0000	0.0000	0.0000	0.0005
TO	4.7244	-0.0028	-0.0009	-0.0014	-0.0021	-0.0004
OVER	4.7244	-0.0017	0.0000	0.0000	0.0000	0.0006
TO	5.5118	-0.0033	-0.0010	-0.0016	-0.0025	-0.0004
OVER	5.5118	-0.0017	0.0000	0.0000	0.0000	0.0006
TO	6.2992	-0.0033	-0.0010	-0.0016	-0.0025	-0.0004
OVER	6.2992	-0.0017	0.0000	0.0000	0.0000	0.0006
TO	7.0866	-0.0033	-0.0010	-0.0016	-0.0025	-0.0004
OVER	7.0866	-0.0020	0.0000	0.0000	0.0000	0.0006
TO	7.8740	-0.0038	-0.0011	-0.0018	-0.0028	-0.0005
OVER	7.8740	-0.0020	0.0000	0.0000	0.0000	0.0006
TO	8.8583	-0.0038	-0.0011	-0.0018	-0.0028	-0.0005
OVER	8.8583	-0.0020	0.0000	0.0000	0.0000	0.0006
TO	9.8425	-0.0038	-0.0011	-0.0018	-0.0028	-0.0005
OVER	9.8425	-0.0022	0.0000	0.0000	0.0000	0.0006
TO	11.0236	-0.0043	-0.0013	-0.0020	-0.0032	-0.0006
OVER	11.0236	-0.0022	0.0000	0.0000	0.0000	0.0006
TO	12.4016	-0.0043	-0.0013	-0.0020	-0.0032	-0.0006
OVER	12.4016	-0.0024	0.0000	0.0000	0.0000	0.0007
TO	13.9764	-0.0047	-0.0014	-0.0022	-0.0035	-0.0007
OVER	13.9764	-0.0024	0.0000	0.0000	0.0000	0.0007
TO	15.7480	-0.0047	-0.0014	-0.0022	-0.0035	-0.0007
OVER	15.7480	-0.0027	0.0000	0.0000	0.0000	0.0008
TO	17.7165	-0.0052	-0.0016	-0.0025	-0.0038	-0.0008
OVER	17.7165	-0.0027	0.0000	0.0000	0.0000	0.0008
TO	19.6850	-0.0052	-0.0016	-0.0025	-0.0038	-0.0008

GENERAL RECOMMENDATIONS

Maintenance Instructions			
Series		Lubricant	Maintenance*
MZ, BB,		Grease	Pre-lubricated with grease. No lubrication maintenance required.
BUS200, PBUS		Grease	Change the grease and clean the inside of the Cam Clutch every six months.
BRUE		Grease	Add the grease for both bearings every three months.
MZEU	12 to 80	Grease	Add the grease for both bearings every three months.
MZEU	90 to 50	Oil	Change the oil and clean the inside of the Cam Clutch every three months.
TSS, TFS		Oil	Change the oil and clean the inside of the Cam Clutch every six months.
MGUS, MIUS		Oil	Add oil every 100 hours. Change the oil and clean the inside of the Cam Clutch every three months.
MGUS-R		Oil	Add oil every 300 hours. Change the oil and clean the inside of the Cam Clutch every three months.
BS[1]	30 to 75	Grease	Pre-lubricated with grease. No lubrication maintenance required unless specified.
BS-F[1]	85 to 465	Grease	Pre-lubricated with grease. Drain and clean inside of the Cam Clutch and inject new grease once a year.
BSEU, BRUS		Grease	Pre-lubricated with grease. No lubrication maintenance required unless specified.
Cam Clutch Box		Oil	Lubrication maintenance is necessary only once a year for normal use.

*** These are general guidelines. Actual maintenance may vary depending on usage and operating conditions.**

1. BS and BS-F have specific lubrication requirements, please refer to the individual instruction manuals.

The clutch should receive proper care and lubrication to ensure maximum long-life performance. Please see the recommendations below. If Cam Clutch is being used outside of the temperature ranges, please contact Tsubaki.

Note that the following are general guidelines. Some Cam Clutch series require different lubrication than listed below. Follow the recommendations for the specific series when applicable. See the instruction manual which came with your unit. Instruction manuals are also available at our web site.

Overrunning and Backstopping Applications	
Oil Recommendations for Ambient Temperature Ranges	
+14°F to +86°F (-10°C to +30°C)	-86°F to +122°F (+30°C to +50°C)
Any Automatic Transmission Fluid (ATF) Shell Turbo Oil T32, Turbo Oil 68, Rimulla D Oil 10W Exxon Mobil DTE Oil Light, Delvac Hydraulic 10W, ATF220 Teresstic Oil 68, DTE Heavy Medium Texaco Regal Oil R&O 68, Chevron GST Oil 68 BP Rnergol THB32, Gulf Harmony 32	Exxon Mobil Delvac 1330 Essolube XT1 10W-30 Shell Rimulla D Oil 20W/20 Rimulla D Oil 30 White Parrot Super S-3-20W-20, 30

Note: Do not use lubricants that contain EP additives

Indexing Applications	
Oil Recommendations for Ambient Temperature Ranges	
+20°F to +86°F (-7°C to +30°C)	-10°F to +20°F (-23°C to -7°C)
At 150 strokes per minute or less	At 150 strokes per minute or less
Any Transmission Fluid (ATF), Shell Turbo Oil 32 Exxon Mobil DTE Oil Light, Teresstic Oil 32 Texaco Regal Oil R&O 32, Amoco Industrial Oil 32	Any Transmission Fluid (ATF) Shell Clavus Oil 15 Exxon Mobil Zerice 46, Sunoco Sunvis 916

Note: Do not use lubricants that contain EP additives

General Purpose Cam Clutch Applications	
Grease Recommendations for Ambient Temperature Range	
+20°F to +104°F (-5°C to +40°C)	
Shell Fiske Bros. Kyodo Yushi Petro-Canada	Alvania Grease S1, Sunlight Grease 1, Aeroshell No.7, Aeroshell No.22 Lubriplate Low-Temp, Aero Lubriplate Multemp PS No.1 PRECISION Synthetic

Note: Do not use lubricants that contain EP additives

METRIC EQUIVALENTS AND CONVERSIONS

Metric Equivalents			
Inches	Millimeters	Inches	Millimeters
1	25.4	34	863.6
2	50.8	35	889.0
3	76.2	36	914.4
4	101.6	37	939.8
5	127.0	38	965.2
6	152.4	39	990.6
7	177.8	40	1016.0
8	203.2	41	1041.4
9	228.6	42	1066.8
10	254.0	43	1092.2
11	279.4	44	1117.6
12	304.8	45	1143.0
13	330.2	46	1168.4
14	355.6	47	1193.8
15	381.0	48	1219.2
16	406.4	49	1244.6
17	431.8	50	1270.0
18	457.2	51	1295.4
19	482.6	52	1320.8
20	508.0	53	1346.2
21	533.4	54	1371.6
22	558.8	55	1397.0
23	584.2	56	1422.4
24	609.6	57	1447.8
25	635.0	58	1473.2
26	660.4	59	1498.6
27	685.8	60	1524.0
28	711.2	61	1549.4
29	736.6	62	1574.8
30	762.0	63	1600.2
31	787.4	64	1625.6
32	812.8	65	1651.0
33	838.2	66	1676.4

Chart works left-to-right or right-to-left:
- Convert inch to millimeter, multiply inch value by 25.4
- Convert millimeter to inch, multiply mm value by 0.03937

Conversions			
Multiply By	FROM / TO	TO / FROM	Multiply By
0.03937	inch	millimeter	25.4
0.0016	$inch^2$	$millimeter^2$	645.16
0.061	$inch^3$	$centimeter^3$	16.3871
0.2642	gallon (U.S.)	liter	3.7854
0.03527	oz.	gram	28.3495
2.2	pound	kilogram	0.4545
62.43	$lbs./ft^3$	g/cm^3	0.0160
0.145	psi	kPa	6.8948
14.2247	psi	kg/cm^2	0.0703

Metric Equivalents					
Inches		Millimeters	Inches		Millimeters
1/64	0.015625	0.396875	33/64	0.515625	13.096875
1/32	0.031250	0.793750	17/32	0.531250	13.493750
3/64	0.046875	1.190625	35/64	0.546875	13.890625
1/16	0.062500	1.587500	9/16	0.562500	14.287500
5/64	0.078125	1.984375	37/64	0.578125	14.684375
3/32	0.093750	2.381250	19/32	0.593750	15.081250
7/64	0.109375	2.778125	39/64	0.609375	15.478125
1/8	0.125000	3.175000	5/8	0.625000	15.875000
9/64	0.140625	3.571875	41/64	0.640625	16.271875
5/32	0.156250	3.968750	21/32	0.656250	16.668750
11/64	0.171875	4.365625	43/64	0.671875	17.065625
3/16	0.187500	4.762500	11/16	0.687500	17.462500
13/64	0.203125	5.159375	45/64	0.703125	17.859375
7/32	0.218750	5.556250	23/32	0.718750	18.256250
15/64	0.234375	5.953125	47/64	0.734375	18.653125
1/4	0.250000	6.350000	3/4	0.750000	19.050000
17/64	0.265625	6.746875	49/64	0.765625	19.446875
9/32	0.281250	7.143750	25/32	0.781250	19.843750
19/64	0.296875	7.540625	51/64	0.796875	20.240625
5/16	0.312500	7.937500	13/16	0.812500	20.637500
21/64	0.328125	8.334375	53/64	0.828125	21.034375
11/32	0.343750	8.731250	27/32	0.843750	21.431250
23/64	0.359375	9.128125	55/64	0.859375	21.828125
3/8	0.375000	9.525000	7/8	0.875000	22.225000
25/64	0.390625	9.921875	57/64	0.890625	22.621875
13/32	0.406250	10.318750	29/32	0.906250	23.018750
27/64	0.421875	10.715625	59/64	0.921875	23.415625
7/16	0.437500	11.112500	15/16	0.937500	23.812500
29/64	0.453125	11.509375	61/64	0.953125	24.209375
15/32	0.468750	11.906250	31/32	0.968750	24.606250
31/64	0.484375	12.303125	63/64	0.984375	25.003125
1/2	0.500000	12.700000	1	1.000000	25.400000

STANDARD KEYWAYS

"Inch" Standard Keyways and Set Screw					
Shaft Diameter (in.)		Keyway (in.)		Key (in.)	
From	To	Width	Depth	Width	Depth
5/16	7/16	3/32	3/64	3/32	3/32
1/2	9/16	1/8	1/16	1/8	1/8
5/8	7/8	3/16	3/32	3/16	3/16
15/16	1-1/4	1/4	1/8	1/4	1/4
1-5/16	1-3/8	5/16	5/32	5/16	5/16
1-7/16	1-3/4	3/8	3/16	3/8	3/8
1-13/16	2-1/4	1/2	1/4	1/2	1/2
2-5/16	2-3/4	5/8	5/16	5/8	5/8
2-13/16	3-1/4	3/4	3/8	3/4	3/4
3-5/16	3-3/4	7/8	7/16	7/8	7/8
3-13/16	4-1/2	1	1/2	1	1
4-9/16	5-1/2	1-1/4	5/8	1-1/4	1-1/4
5-9/16	6-1/2	1-1/2	3/4	1-1/2	1-1/2
6-9/16	7-1/2	1-3/4	7/8	1-3/4	1-1/2
7-9/16	8-15/16	2	1	2	1-1/2
9	10-15/16	2-1/2	1-1/4	2-1/2	1-3/4

"Metric" Standard Keyways and Set Screw					
Shaft Diameter (mm)		Keyway (mm)		Key (mm)	
From	Including	Width	Depth	Width	Depth
6	8	2	1	2	2
8	10	3	1.4	3	3
10	12	4	1.8	4	4
12	17	5	2.3	5	5
17	22	6	2.8	6	6
22	30	8	3.3	8	7
30	38	10	3.3	10	8
38	44	12	3.3	12	8
44	50	14	3.8	14	9
50	58	16	4.3	16	10
58	65	18	4.4	18	11
65	75	20	4.9	20	12
75	85	22	5.4	22	14
85	95	25	5.4	25	14
95	110	28	6.4	28	16
110	130	32	7.4	32	18
130	150	36	8.4	36	20

Metric Bolt Torques				
	Grade 8.8		Grade 10.9	
Pitch	lb.ft.	(Nm)	lb.ft.	(Nm)
M5	4.4	(6)	5.9	(8)
M6	7.4	(10)	10.3	(14)
M8	18.4	(25)	25.1	(34)
M10	35.4	(48)	50.2	(68)
M12	62.0	(84)	87.0	(118)
M16	152	(206)	214	(290)
M20	297	(402)	406	(550)
M24	513	(696)	701	(950)
M30	1047	(1420)	1401	(1900)

Conversion Factors and Formulas

Conversion Factors

Length	1µm = .00004 in.
1 inch = 25.4 mm	1 m = 39.37 in.
1 ft. = 304.8m	1 m = 3.28 ft.
Force	
1 lb. = 454 g	1 kg = 2.2 lb.
Temperature	
°F = (1.8x°C) + 32	C = 5/9x(°F–32)
Area	
1 in.^{2} = 0.00064516 m^2	1 m^2 = 1550 in.^{2}
1 ft.^{2} = 0.0929 m^2	1 m^2 = 10.764 ft.^{2}
Volume	
1 ft.^{3} = 2.832x10^{-2} m^3	1 m^3 = 35.315 ft.^{3}
1 gal (US) = 3.7854 l	1 l = 0.2642 gal (US)
Mass/Volume	
1 lb.ft.$^{-3}$ = 16.018 kgm^{-3}	1 kgm^{-3} = 6.24x10^{-2} lb.ft.$^{-3}$

Conversion Factors and Formulas

Torque Calculation

$$T\ (\text{lb.ft.}) = \frac{\text{hp x 5250}}{\text{rpm}} \qquad T\ (\text{Nm}) = \text{lb.ft. x 1.356}$$

$$T\ (\text{Nm}) = \frac{\text{9550 x P (kW)}}{\text{rpm}}$$

Torque	
1 lb.in. = 0.113 Nm	1 Nm = 8.85 lb.in.
1 lb.ft. = 1.36 Nm	1 Nm = 0.738 lb.ft.
Power	
1 HP = 746 W = 0.746 kW	1 kW = 1.34 HP
Work	
1 Btu = 778 lb.ft.	
1 Btu = 1055 J = 1.055 kJ	1 kJ = 0.948 Btu
Moment of Inertia	
1 lb.ft.^{2} = 0.04214 kgm^2	1 kgm^2 = 23.73 lb.ft.^{2}
1 lb.in.^{2} = 2.93x10-4 kgm^2	1 kgm^2 = 3417.17 lb.in.^{2}
1 lb.ft. s^2 = 1.3847 kgm^2	1 kgm^2 = 0.738 lb.ft. s^2
1 lb.in. s^2 = 0.1129 kgm^2	1 kgm^2 = 8.8507 lb. in. s^2

Calculated Wear Life

LIFE OF CAM CLUTCH

Regarding Cam Clutch life, there are two conditions that have a major impact. These are listed below. When assessing the expected lifetime of the Cam Clutch it is important to consider these in relation to the actual application:

1. Overrunning abrasion (wear) life
2. Engagement fatigue life
   When assessing the expected lifetime of the Cam Clutch, it is important to consider the above conditions in relation to the actual application.

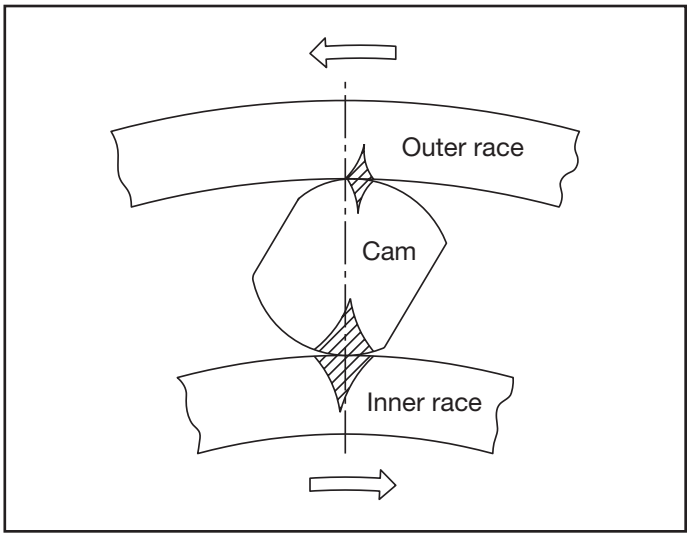

Overrunning abrasion (wear) life

*When the Cam Clutch overruns:
On the contact surfaces of cams and races, skids occur in direct proportion to the overrunning rotational speed. Therefore it is important to pay particular attention to abrasions at the contact points. As the contact pressure by the weak spring force F is low, with sufficient lubrication, these parts will not wear or abrade in a short time. Though it may vary depending on the lubricating condition, the right graph shows the calculated abrasion life, which has been properly lubricated based on the instructions provided in the catalog. Abrasion life must be verified especially for applications involving high speed and long overrunning periods.

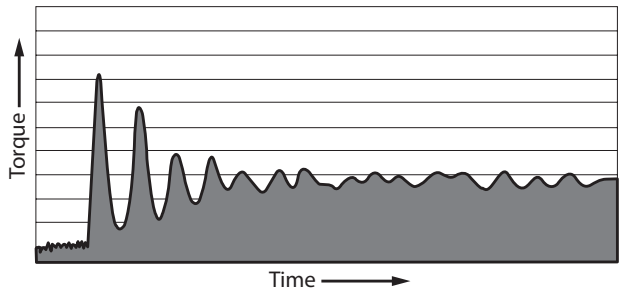

Variable Load Torque Graph

Engagement fatigue life

*When the Cam Clutch engages:
At the contact surfaces of cams and races, the compression stress occurs in direct proportion to engagement torque. Contact surface of inner/outer races move infinitely with respect to each engagement, while that of the cams are almost stable. Therefore, the fatigue caused by this stress will then result in the surface pitting of cams.

Refer to the fatigue life curve, and check the expected life.

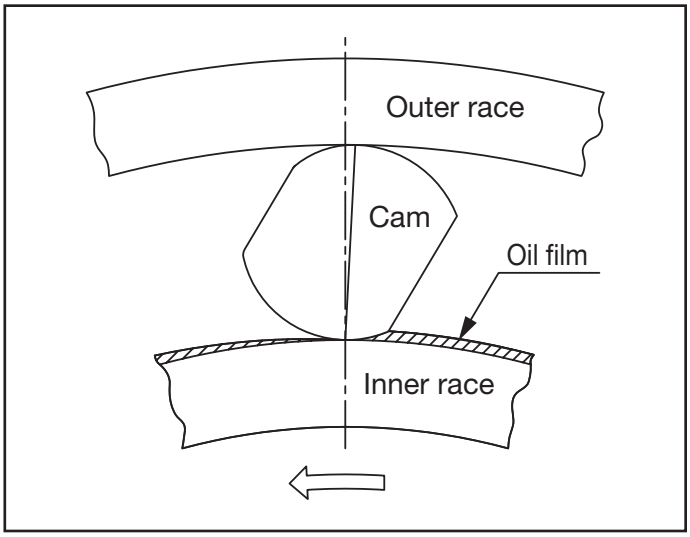

Note:
In cases where the load applied to the Cam Clutch changes, or where vibrational loads are encountered, repeated torque loads can be applied during a single clutch engagement. The Variable Load Torque Graph shows the type of repetitive torque loads which can be applied to the Cam Clutch in these cases. Repeated torque loads during a single clutch engagement can have the effect of increasing the overall torque load, and this must also be considered when determining Cam Clutch service life.

LIFE OF BREU/BR-HT/BRUS SERIES CAM CLUTCH

The service life of previous TSUBAKI Cam Clutch was determined as the frictional service life during free-running (clutch disengaged) and the fatigue service life of the engaged clutch. However, with the BR Series, free-running frictional service life is not a factor because there is no mechanical contact when the clutch is disengaged. As a result, service life is determined solely by the fatigue life of the engaged clutch.

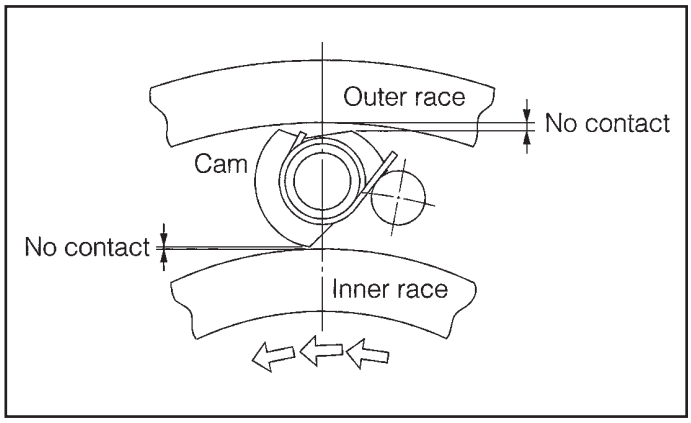

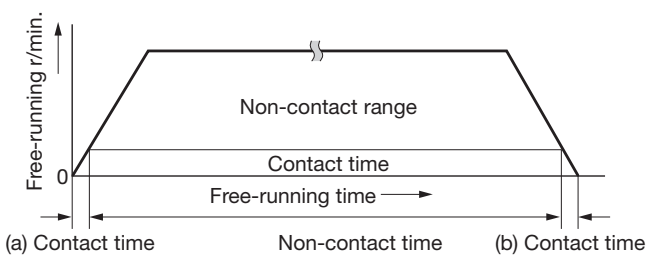

Friction in the clutch mechanism only occurs during a very short period of time denoted by “a” and “b”. “a” is the time during which the cam is engaged until the acceleration of inner race causes it to disengage. “b” is the time during which the cam engages when the inner race decelerates.

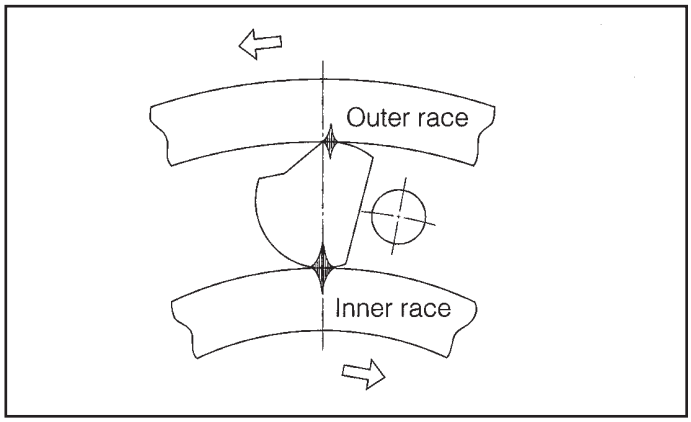

Calculated Service Life

MGUS, MIUS, MR Series

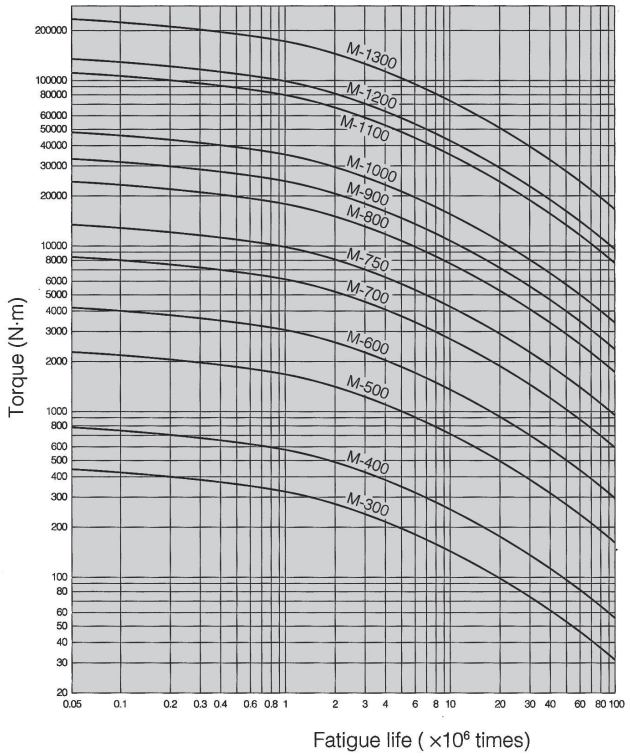

MGUS Series only

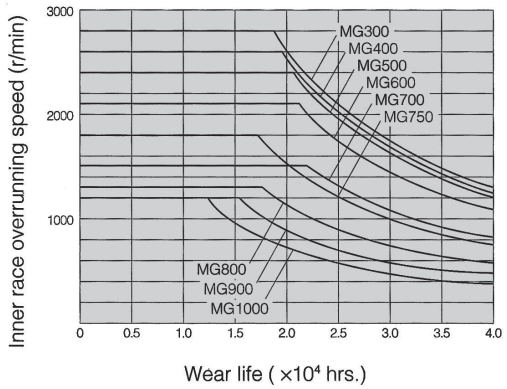

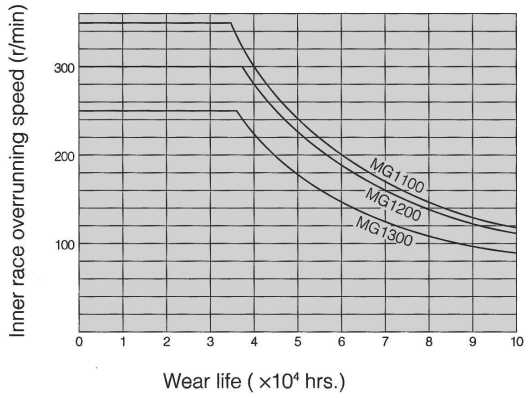

TSS Series

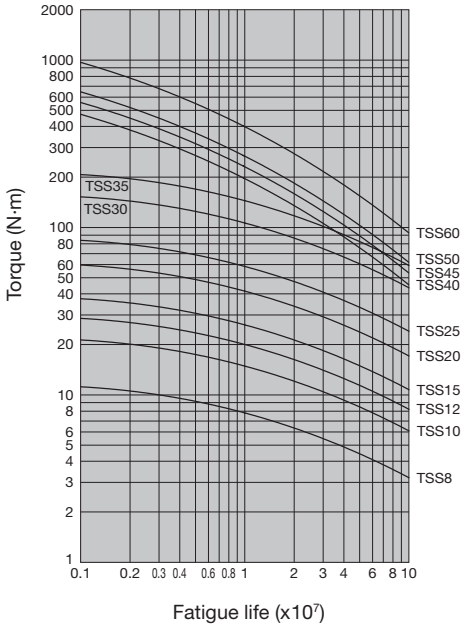

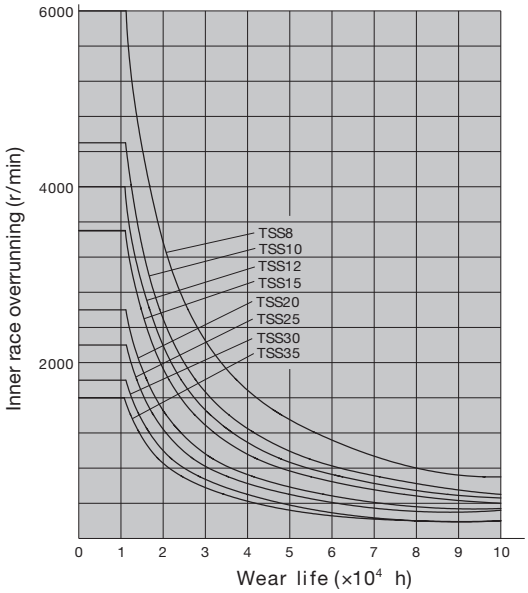

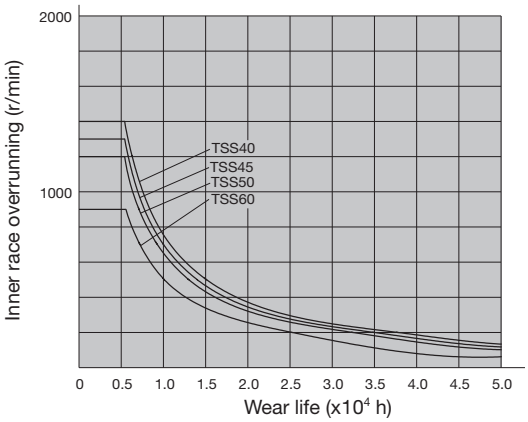

BB Series

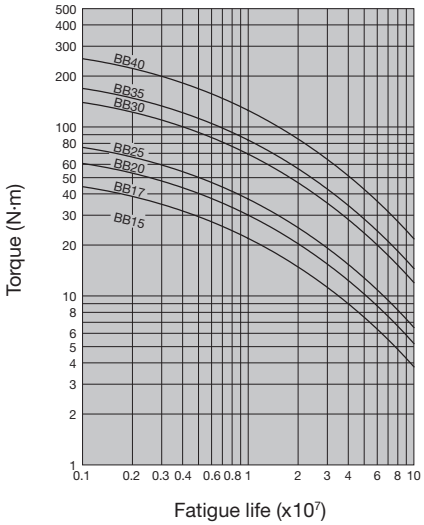

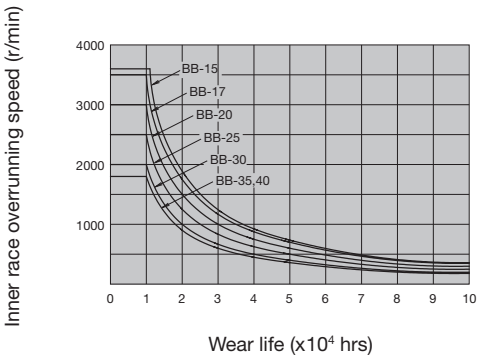

Calculated Service Life

TFS Series

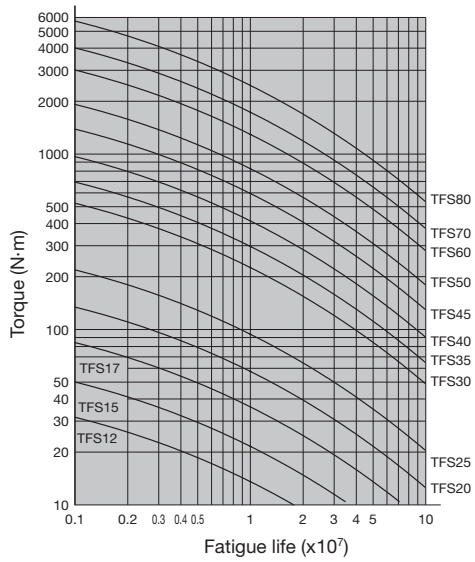

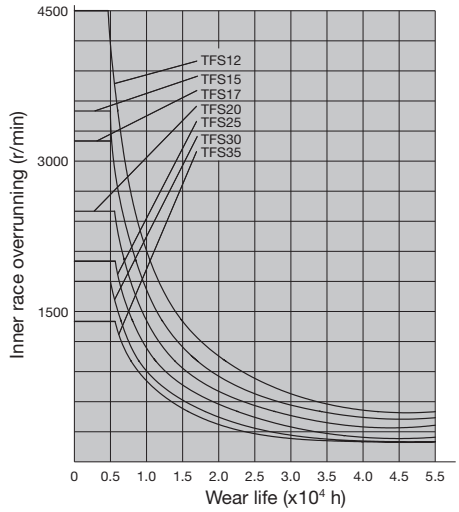

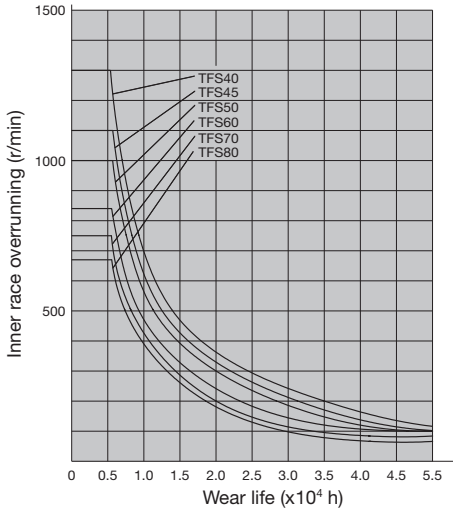

PBUS Series

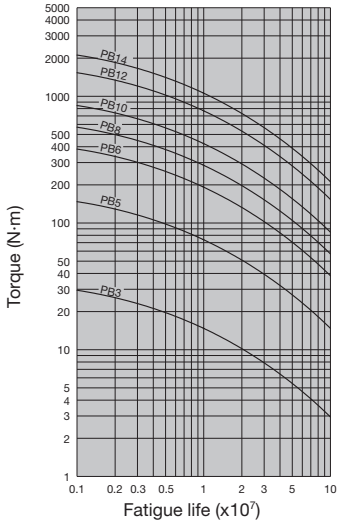

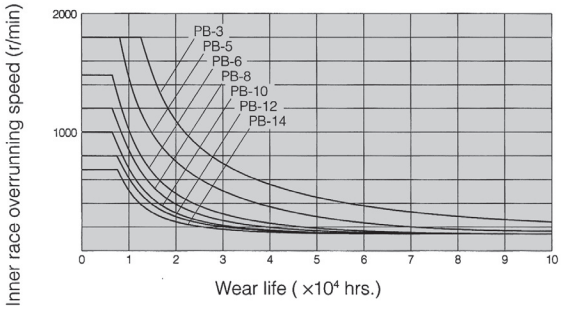

MZ Series

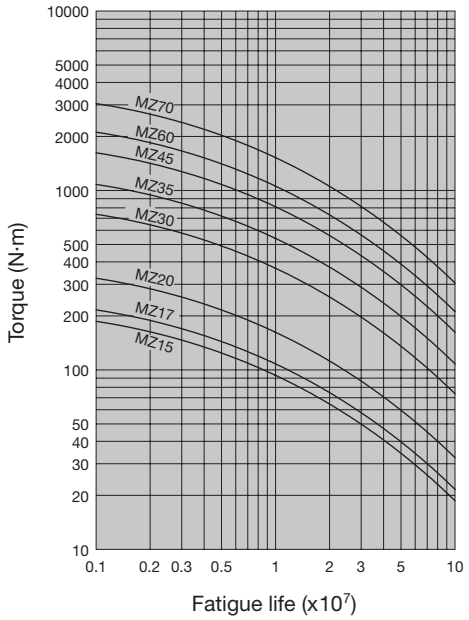

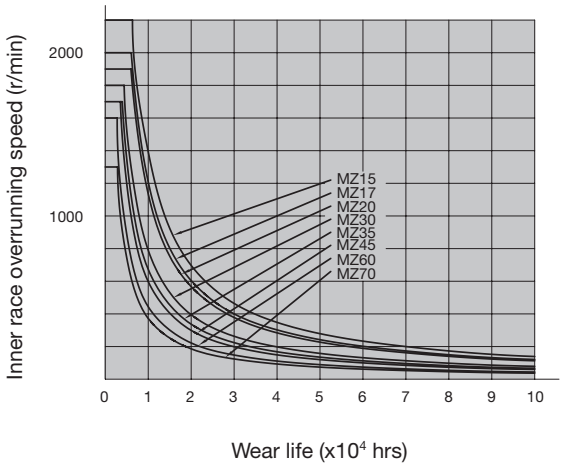

OB Series

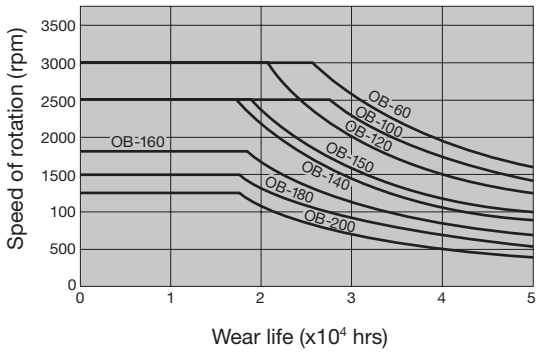

Calculated Service Life

BUS200 Series

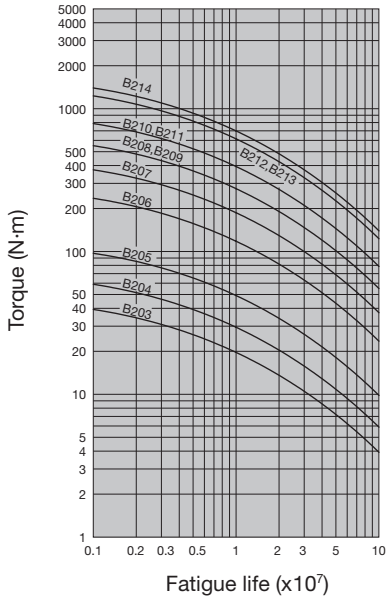

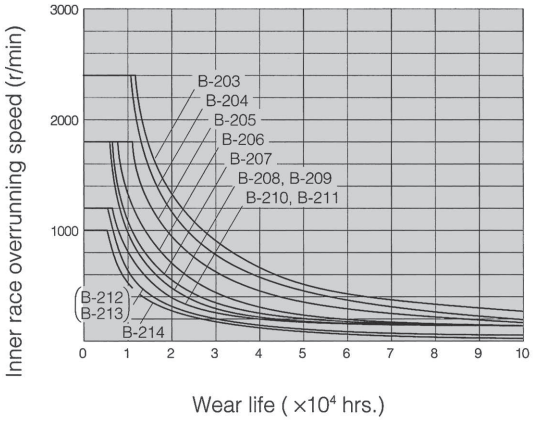

MZEU Series

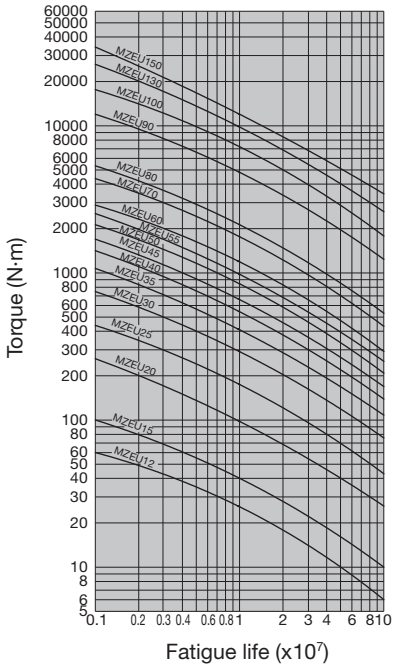
Torque (N·m)
Fatigue life (x10⁷)
MZEU150
MZEU130
MZEU100
MZEU90
MZEU80
MZEU70
MZEU60
MZEU55
MZEU50
MZEU45
MZEU40
MZEU35
MZEU30
MZEU25
MZEU20
MZEU15
MZEU12

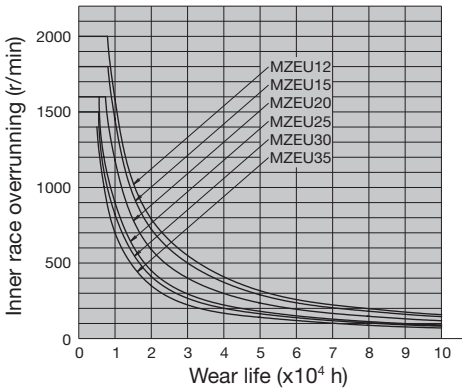
Inner race overrunning (r/min)
Wear life (x10⁴ h)
MZEU12
MZEU15
MZEU20
MZEU25
MZEU30
MZEU35

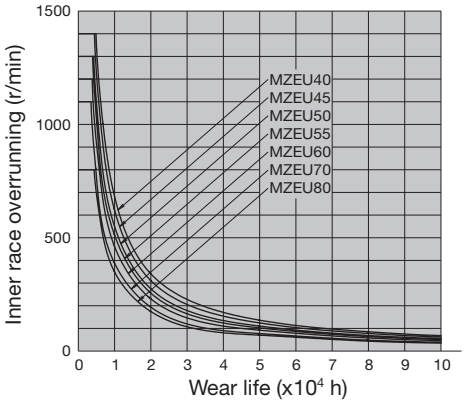
Inner race overrunning (r/min)
Wear life (x10⁴ h)
MZEU40
MZEU45
MZEU50
MZEU55
MZEU60
MZEU70
MZEU80

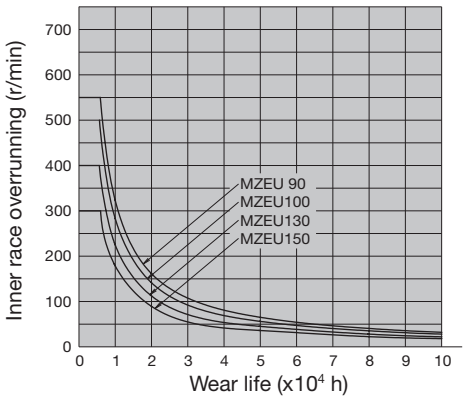
Inner race overrunning (r/min)
Wear life (x10⁴ h)
MZEU 90
MZEU100
MZEU130
MZEU150

OVERRUNNING APPLICATION REQUEST FORM

Date:	Name of contact:
Company name:	Tel:
Address:	Fax:
	E-mail:

Type of Equipment

Maximum Torque at Clutch

_____ pound/feet

OR

HP / kW _____ at _____ RPM

Power Source

☐ Electric motor

☐ Turbine (steam, gas, air)

☐ Gasoline engine: number of cylinders: _____

☐ Diesel engine: number of cylinders: _____

☐ Other (please explain in more detail)

_____

_____

_____

_____

Load Application

☐ Smooth ☐ Moderate ☐ Shock

Installation Condition

☐ Open, outside ☐ Open, in a closed room

☐ In the machine housing

☐ Runs in oil ☐ Not accessible

☐ Accessible for lubricating

Arrangement of the Overrruning Clutch

Operating Condition

Inner race speed during overruning _____ RPM

Outer race speed during overruning _____ RPM

If both members are rotating during overruning, are they rotating in the:

☐ Same direction ☐ Opposite directions

Time Cycle of Clutch

Drive (engage) _____ minutes

Overrun (free) _____ minutes

Rest _____ minutes

Clutch operating time _____ hours per day

Environment

Ambient temperature _____ F° to _____ F°

Other (e.g. dust, wet, corrosive and other environmental influences that could be of significance)

Type of Specification of Lubricant

BACKSTOP APPLICATION REQUEST FORM

Date:	Name of contact:
Company name:	Tel:
Address:	Fax:
	E-mail:

For Belt Conveyor

1. Net weight of moving parts of the conveyor or width of belt:	kg mm
2. Velocity of conveyor:	m/min
3. Max. possible load:	tons/hour
4. Total lift:	m
5. Horizontal distance between head pulley and tail pulley:	m
6. Modification coefficient for l = 49 m (normally used):	
7. Shaft speed on which the clutch is mounted:	r/m

For Bucket Elevator

1.Total lift:	
2. Pitch circle dia. of head sprocket:	m
3. Possible max load:	tons/hour
4. Velocity of conveyor:	m/min

For Motor Stall Torque Method

1. Motor name plate:	kW
2. Shaft speed:	r/min
3. Stall torque percentage:	%

Motor:		kW
Horsepower:	HP, at	r/m
Shaft bore:		
Maximum torque at clutch (excluding SF):		
Clutch oparating time:		hours/day
Ambient Temp.:		
Exposed to:	Dirt	
	Other (	)
Key size:		
Quantity required:		
Power eource:	Electric motor	
	Diesel engine	
	Petrol engine	
	Other (	)

Please provide layout if possible.

NOTES

⚠ WARNING

USE CARE TO PREVENT INJURY COMPLY WITH THE FOLLOWING TO AVOID SERIOUS PERSONAL INJURY:

1. Guards must be provided on all chain and sprocket installations in accordance with provisions of ANSI/ASME B11.19 – 2010 "Safety Standards for Mechanical Power Transmission Apparatus," and ANSI/ASME B20.1 – 2015 "Safety Standards for Conveyors and Related Equipment," or other applicable safety standards. When revisions of these standards are published, the updated edition shall apply.

2. Always lock out the power switch before installing, removing, lubricating or servicing a system which uses a PTUC product.

3. When connecting or disconnecting PTUC products, eye protection is required. Wear safety glasses, protective clothing, gloves and safety shoes.

4. Improper installation or mounting, as well as operating conditions and maintenance, can affect the performance of a Cam Clutch. The Cam Clutch should be inspected regularly.

“PTUC” is used by U.S. Tsubaki to designate “Power Transmission Unit Components.” PTUC products include Cam Clutch, DISCO, POWER-LOCK®, Shock Relay, Gearmotor, HF Drive, Shock Damper, Power Cylinder™, Couplings, SCR variable speed motor and other like products manufactured by/for Tsubaki.

More innovative solutions from Tsubaki

SEALED JOINT CHAIN OPTIONS

BACKSTOPS & OVERRUNNING CLUTCHES

STEEL CABLE CARRIERS

CONTINUOUS-FLEX CABLES

SMART TOOTH® SPROCKETS

TITAN™ SERIES CHAINS

EXCELLENCE THROUGH INNOVATION SINCE 1917

For over 100 years, Tsubaki has developed and manufactured the highest-quality products for power transmission and motion control. With a vast network of global production facilities, R&D resources and sales offices, Tsubaki remains committed to providing innovative solutions to customers' problems for the next 100 years.

ustsubaki.com

Corporate Headquarters
U.S. Tsubaki Power Transmission, LLC
301 E. Marquardt Drive
Wheeling, IL 60090
Tel: 800.323.7790

Roller Chain Division
821 Main St.
Holyoke, MA 01040
Tel: 800.323.7790

Conveyor & Construction Chain Division
1010 Edgewater Drive
Sandusky, OH 44870
Tel: 800.537.6140

Sprocket Manufacturing
1630 Drew Road
Mississauga, ON L5S 1J6
Tel: 800.323.7790

Cable & Hose Carrier Division
7100 W. Marcia Road
Milwaukee, WI 53223
Tel: 800.443.4216

Note: In accordance with the policy of U.S. Tsubaki Power Transmission, LLC to consistently improve its products, the specifications in this brochure are subject to change without noti
The logos, brand names or product names in this brochure are trademarks or registered trademarks of Tsubakimoto Chain Co. and its subsidiaries in Japan, the U.S. and other countrie

© 2018 U.S. Tsubaki Power Transmission, LLC. All Rights Reserved.

Printed in the USA. 01/19 Rev. 2 L14016